Vehicle Drive Recorder

SX5 FHD

User Manual

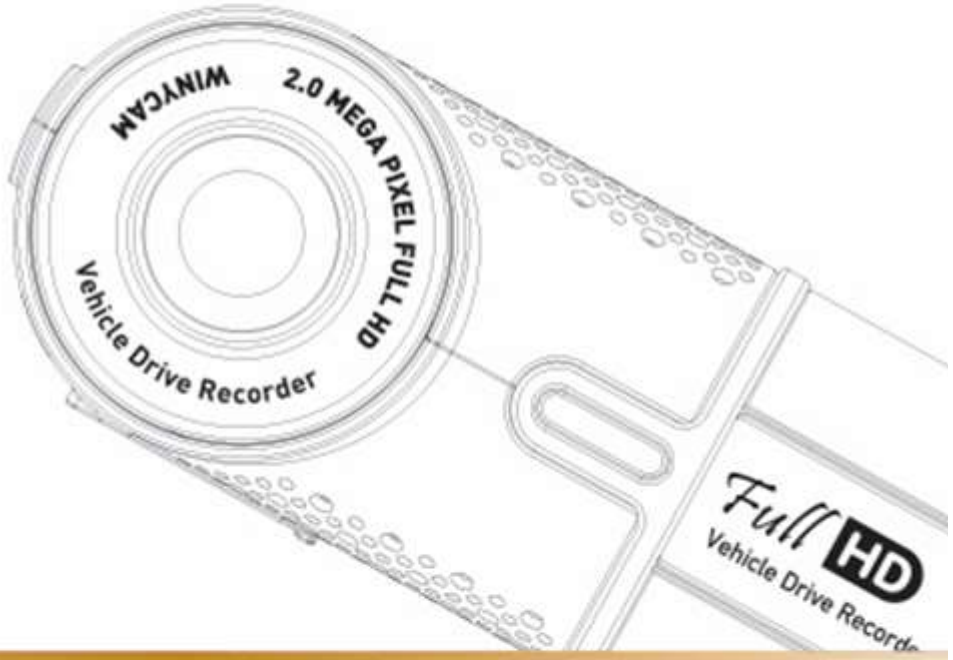

Vehicle Drive Recorder CE FC RoHs

WinyTechnology Co., Ltd
http://winycam-eng.com

Contents

Product Safety Precautions
Package
Product Parts
How to install
How to record
Playback – PC
Playback - TV / Car Navigation
LED Operation Guide
Voice Guide
How to install original viewer program
Original Viewer – Screen Configuration
Original Viewer – Viewer Configuration
Original Viewer – Basic Configuration
Original Viewer – Sensitivity Configuration
Configuration Default Setting
Firmware Update
SD Card Format
Specification
Recordable Time
Warranty

Product Safety Precautions

Operation & Storage Precautions

- Please do not operate the product during driving. It may cause accidents.
- Do not disassemble or convert the product intentionally. It may lead to product failure and the responsibility for the damage to the product resulting from this shall be borne by the user.
- Since this product is a device that records a driving video by using the camera, the image quality may drop when entering the tunnel, in shading contrast, backlight and photometric conditions, and the middle of the night.
- The thermal environment at below -20℃ or over 60℃ may cause a malfunction or failure of the product. If the product temperature became higher in parking mode, REC will stop to protect a product SD Card. (When not using the product, please be careful about storage temperature)
- Do not use the product in a place at high temperature or much moisture.
- Do not press excessive force to the products (especially buttons and bracket). It may cause a malfunction of the products.
- Before using the product, make sure to operate it for 3 to 5 minutes and verify that the image saved properly and then use it.
- If the product is in prolonged exposure to sunlight or high temperatures during the summer, normal operation can be difficult.
- When firmware upgrade is in progress, if SD card is removed or a power is disconnected, failure of the product may occur, so should be careful.
- Do not leave the cigarette lighter cable or the product near heating equipment.
- Do not bend or pull the cigarette lighter cable forcefully or avoid placing heavy objects on the cigarette lighter cable. (A damaged power cord may cause fire or electric shock)
- Do not disassemble, crimp, destroy.
- When camera direction changed during recording, a black recording image will be shown around 2 seconds.

 # This product is assistant device for recoding driving video. Please use this product for your reference for checking driving video, not as special CCTV because the image might not be record depend on environment.
 # This product might change without any notice for performance improvement.
 # This user manual indicate only basic user manual, please check furthermore detail information from http://winycam-eng.com

FCC Approval

This device complies with part 15 of the FCC Rules. Operation is subject to the following two conditions: (1) This device may not cause harmful interference, and (2) this device must accept any interference received, including interference that may cause undesired operation.

This equipment has been tested and found to comply with the limits for a digital device, pursuant to part 15 of the FCC Rules. These limits are designed to provide reasonable protection against harmful interference in a residential installation. This equipment generates, uses and can radiate radio frequency energy and, if not installed and used in accordance with the instructions, may cause harmful interference to radio communications. However, there is no guarantee that interference will not occur in a particular installation. If this equipment does cause harmful interference to radio or television reception, which can be determined by turning the equipment off and on, the user is encouraged to try to correct the interference by one or more of the following measures:
Reorient or relocate the receiving antenna.
Increase the separation between the equipment and receiver.
Connect the equipment into an outlet on a circuit different from that to which the receiver is connected.
Consult the dealer or an experienced radio/TV technician for help.

Changes or modifications not expressly approved by the party responsible for compliance could void the user's authority to operate the equipment.

This device should be installed and operated with minimum 20 cm between the radiator and your body.
This transmitter must not be co-located or operating in conjunction with any other antenna or transmitter unless authorized to do so by the FCC.

Product Safety Precautions

SD Card Precautions

- In order to confirm normal operation of the product, please check the image of a SD card and format it on a regular basis. (PC format needed one to two times per month)
- Because an SD card is consumables, if it is used for a long time, you may lose the data or may not record due to an error, so please check it periodically.
- When the product is in recording or the power is on, do not eject the SD card forcibly. It may cause a failure of the SD card and data loss.
- Due to excessive temperature rise inside the car, the data may not be saved or get damaged, so please park the car in a cool place in the summer.
- When identify the car's accident or damage, please keep the SD card separately. Due to overwrite, important data may be deleted..
- When turn off the power of the body and remove the SD card before LED is turned off, the last recording file may not be saved, so please be careful.
- In general, the SD card is a consumable product in life, so if it is not used for a long time, you may not be able to save the data. In this case, buy a new SD card and use it, and please always check that the recorded images and a SD card have no problems with data storage.
- When driving a car, do not remove the SD card. Make sure to remove it safely when a car is in parking or stop.
- After turning on the power, make sure that it is in normal operation.
- Please note that the warranty period of an SD card is six months, and replace it at the time of more than six months.
- Please purchase and use SD Card that manufacture recommended specification.
- The SD card randomly purchased other than the one we provide, shall be excluded from the warranty, and we shall not take any responsibility for loss and damage of the data recorded in the SD card in any case.
- In case purchased SD Card from others, please format as 64KB for assigned unit, if selected not 64KB, SD Card will format as 64KB automatically. Please backup SD Card data before formatting.

Product Feature

High Quality Lens and High Image Quality / Resolution support
• 2 Mega Pixel image sensor mounting.
• 130 degrees (based on lens) wide mega lens
• FULL HD(1920×1080)의 High Image Quality Resolution and 30fps

Various Recording Function and Video Data Acknowledgement
• Constant, Manual, Event, Motion and auto change to Parking recording mode
• Driving records can be stored with GPS data. (optional)
• G sensor built-in Automatic parking recording mode change and event recording mode.
• External video output. (real-time video image can be checked)
• Record resolution is selectable (FHD/HD)
• PC viewer software are provided to change various setting values and map data can be checked when using GPS.
(In the general video player (e.g. Windows media player), recorded video can be played)
• SD card can be formatted as the product itself, without connecting to a PC.
• Each capacity of constant / event/ motion folder can be set in PC Viewer.

High Quality Voice Record and Voice Guidance
• Operating instructions service by voice guidance
• Voice recording On/Off function and speaker output On/Off function.
• High performance microphone built-in

Back-up battery and Car constant power discharge protection function
•Car constant power discharge protection function
(Selectable ON/OFF on viewer, Not required another equipment for this function)
• Consume less than 2mA when power shutdown (Based on 12V)
• When using car constant power discharge protection functions, If user car voltage is 12V and the voltage of less than 11.8V is maintained for more than 30 seconds the product power will be shuts-off
(Note: Shutdown time depend on the Type of Car and car condition.)

Other
• Soft look and emotional design. (easy removable body)
• Security LED light are mounted on front body (LED Lighting function On/Off can be set in PC viewer)

Package

Standard Package

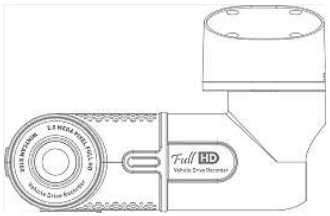

Body & Bracket
(GPS : Option)

Car Cigar Lighter

Micro SD card

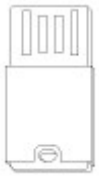

USB Card Reader

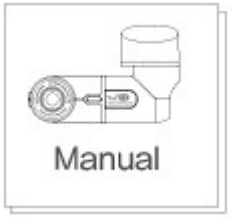

User Manual

Optional Accessories

Video Out Cable
(Option)

GPS Bracket (Option)

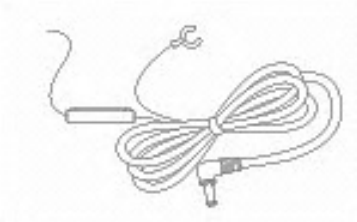

Null Cable (Option)

- The viewer program is stored in Micro SD card.
- Please use after saving the program in advance in the computer, etc. so that the program can't be deleted.
  (If it is deleted, you can download it from our website.)
- The packaged product picture of the user manual may differ from the actual product.
- Video cable is used for connection to the TV / car navigation, and can monitor real-time. But please note that depend on monitors, Video input type is different and check the user manual of monitor.

Product Parts

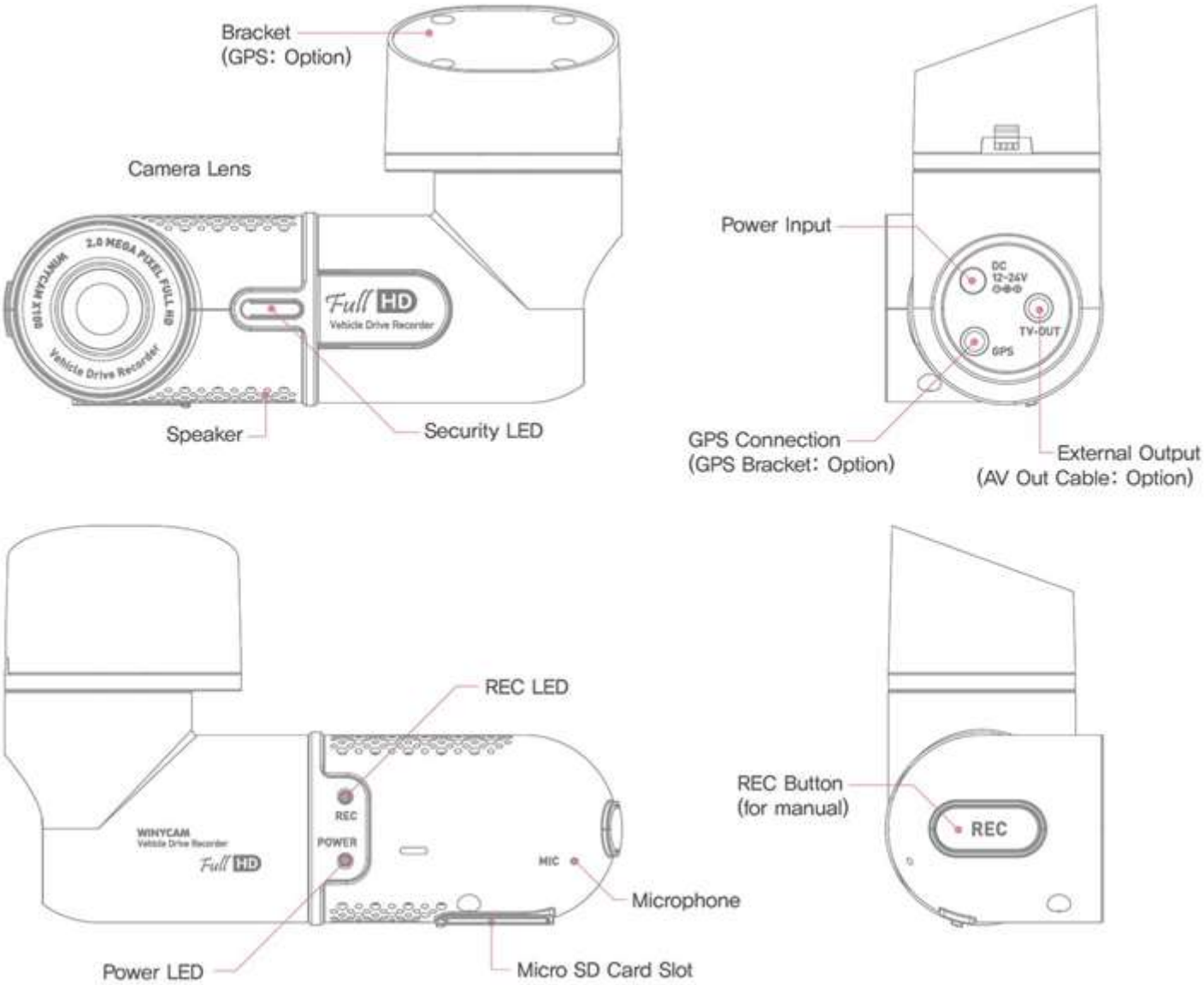

How to install

1.

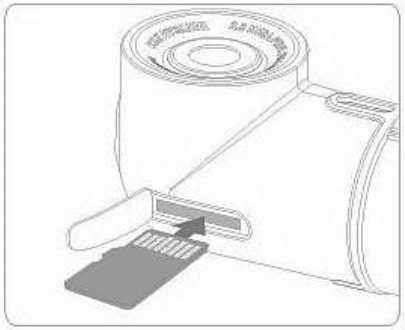

Insert the Micro SD Card to the product after initial setting. (Check insertion direction)

2.

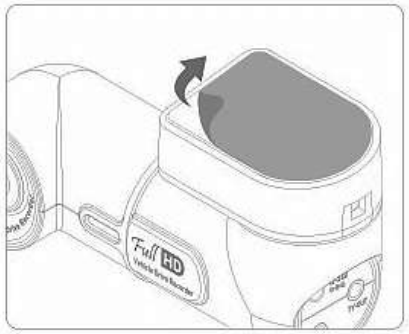

Remove the protect sticker and clean foreign substance in place to attach the product.

3.

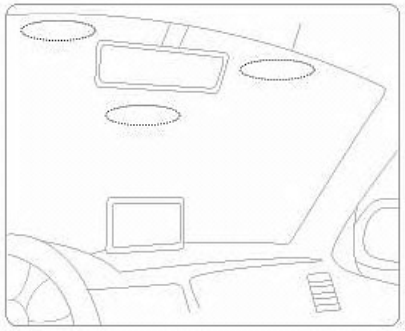

Recommend to attach in just behind the rearview mirror.

4.

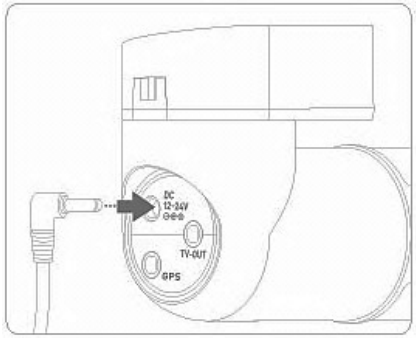

Connect the power cable to the product power socket.

5.

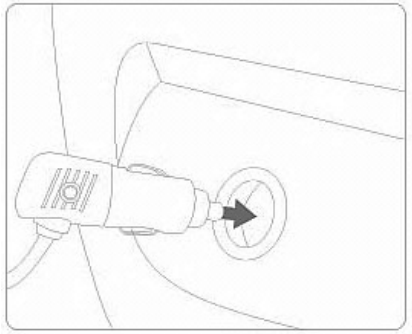

Connect the Cigar lighter to Cigar socket.

6.

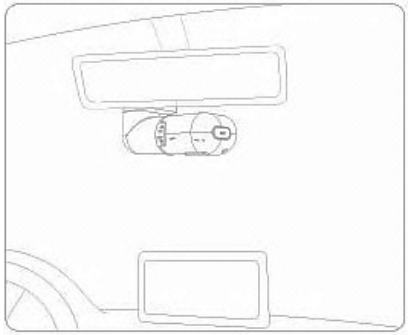

Installation completed.

How to record

1. Record : SX5 is automatically booted at power on, and recording starts in basic normal recording mode.
2. Recording Mode : it is classified into driving recording mode and parking (motion) recording mode
3. Recording Method: it is classified into constant recording, event recording, motion recording.

※ For automatic recording and manual recording methods, please refer the below table.

Recording Mode	Recording Method	Auto Recording Mode	Manual Recording Method (Button Control)	Recording Time	Recording Folder
Driving Mode	Constant Record	Initial recording mode in power connection	-	Set on configuration 30 / 60 / 120 sec	Movie
	Event Record	In G-sensor detect shock	One short press button	Each 15 second recording before and after event or motion occurrence	Event
Parking(Motion) Mode	Motion Record	In G-Sensor is not detected for more than 10 minutes Automatic motion recording mode change	3 seconds long press button		Motion
	Event Record	In G-sensor detect shock	One short press button		Event

※ After change to parking recording mode by manual, if you want to change normal recording mode again, please press "REC" button for 3 seconds (during event recording, mode cannot be changed.)

LED Operation Guide

<table>
<tr><th rowspan="4">Situation</th><th rowspan="4">Front LED Operation</th><th colspan="4">Rear LED</th></tr>
<tr><th rowspan="3">REC LED</th><th colspan="3">Power LED</th></tr>
<tr><th rowspan="2">Normal
(no GPS module)</th><th colspan="2">GPS module</th></tr>
<tr><th>GPS Signal Received</th><th>GPS Signal Non-received</th></tr>
<tr><td>Booting</td><td>Off</td><td>Red lighting</td><td colspan="3">-> Red lighting for 10 sec
-> Red flashing</td></tr>
<tr><td>Firmware Update</td><td>Off</td><td>Orange flashing
(Green/Red)</td><td colspan="3">Orange flashing
(Green/Red)</td></tr>
<tr><td>Power LED</td><td rowspan="2">Flashing for 0.8sec interval</td><td>Green flashing</td><td rowspan="6">Green lighting</td><td rowspan="6">Green flashing</td><td rowspan="6">Orange flashing
(Green/Red)</td></tr>
<tr><td>Event recording mode standby</td><td>Green lighting</td></tr>
<tr><td>Event recording mode start</td><td>Flashing for 0.4sec interval</td><td>Red flashing</td></tr>
<tr><td>Motion/Event recording mode st art</td><td rowspan="2">Flashing for 1.6sec interval</td><td>Orange flashing
(Green/Red)</td></tr>
<tr><td>Motion/Event recording mode standby</td><td>Orange lighting</td></tr>
<tr><td>No Se Card (Error)</td><td>Off</td><td>Off</td><td colspan="3">Orange flashing (Green/Red)</td></tr>
</table>

*When no GPS signal depend on the location, Power LED display only lightning (Green or Orange).
When GPS signal received, Power LED is flashing.

Voice Guide

Situation	Voice Guide
Event / Motion Occur	(Alarm Tone) "Ding-Dong"
Remove SD card / SD card Error	"Please check your SD card.."
Firmware Update Start	"The firmware update is starting."
Firmware Update Completed	"The firmware update has been completed."
Constant (Normal) Recording Start (In booting)	"Constant Recording will start."
Event Recording Start (In booting)	"Event Recording will start."
Parking Recording start	"Parking Recording will start."
Recording end	"The Recording will end."
Update changed Date / Time in configuration	"The Setting has been changed.
Automatically change to Constant (Normal) Recording	"The SD Card is full. Constant Recording will start."
SD card Format stat/completed	"Will you format your SD card?"/ "SD Card is formatted."

* Only when event recording mode is set in the configuration, the voice guiding "event recording will start" will announce

How to Install Original Viewer Program

1. System Requirements

- Windows XP(32bit), Windows Vista(32bit), Window7(32/64)
- Pentium4 2.8GHz & RAM over 1GB.
- Display monitor resolution: 1024 * 768
- DirectX Support (WPF)

2. Install

- Playback program is in packaged SD card.
- Insert this SD card into the USB card reader and connect to the computer.
- An executable file is in the SD card as below figure.

If you run "**setup.exe**", Winy BB Viewer will be installed. And then, installation will be continued according to the installation sequence of setup dialog box.

Installation may tale long depend on PC Usage environment.
If viewer program is lost accidentally, please visit our website winycam-eng and download to the SD card.

Original Viewer – Screen Configuration

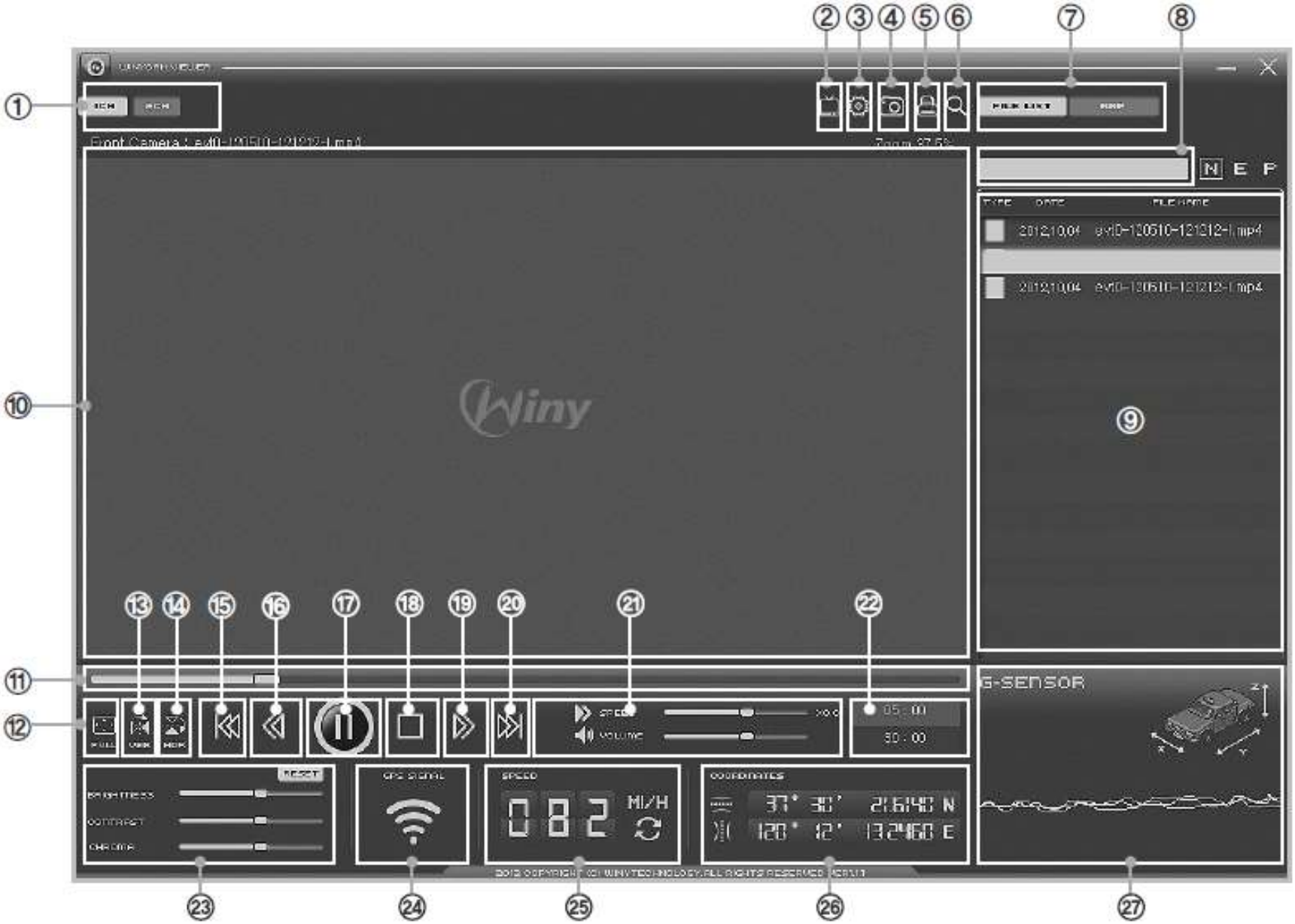

Original Viewer – Screen Configuration

NO.	Item	NO.	Item
1	[1Ch], [2Ch] Select channel and it will playback.	15	File Skip Back
2	Viewer Configuration	16	Fast-forward
3	System Configuration	17	Playback or Pause
4	Screen Capture	18	Stop
5	Print	19	Fast-Rewind
6	Zoom	20	File Skip
7	Play list/Map Button	21	Control playback speed/ Control Volume
8	Find File Location	22	Total File Time/Playback Time
9	Playback list/Map Display Change	23	Brightness/Contrast/Chroma
10	Playback Display	24	GPS signal condition
11	Playback Control	25	Driving speed
12	Full Screen	26	Latitude/Longitude
13	Flip Horizontal	27	G-sensor information
14	Flip Vertical		

Screen Configuration

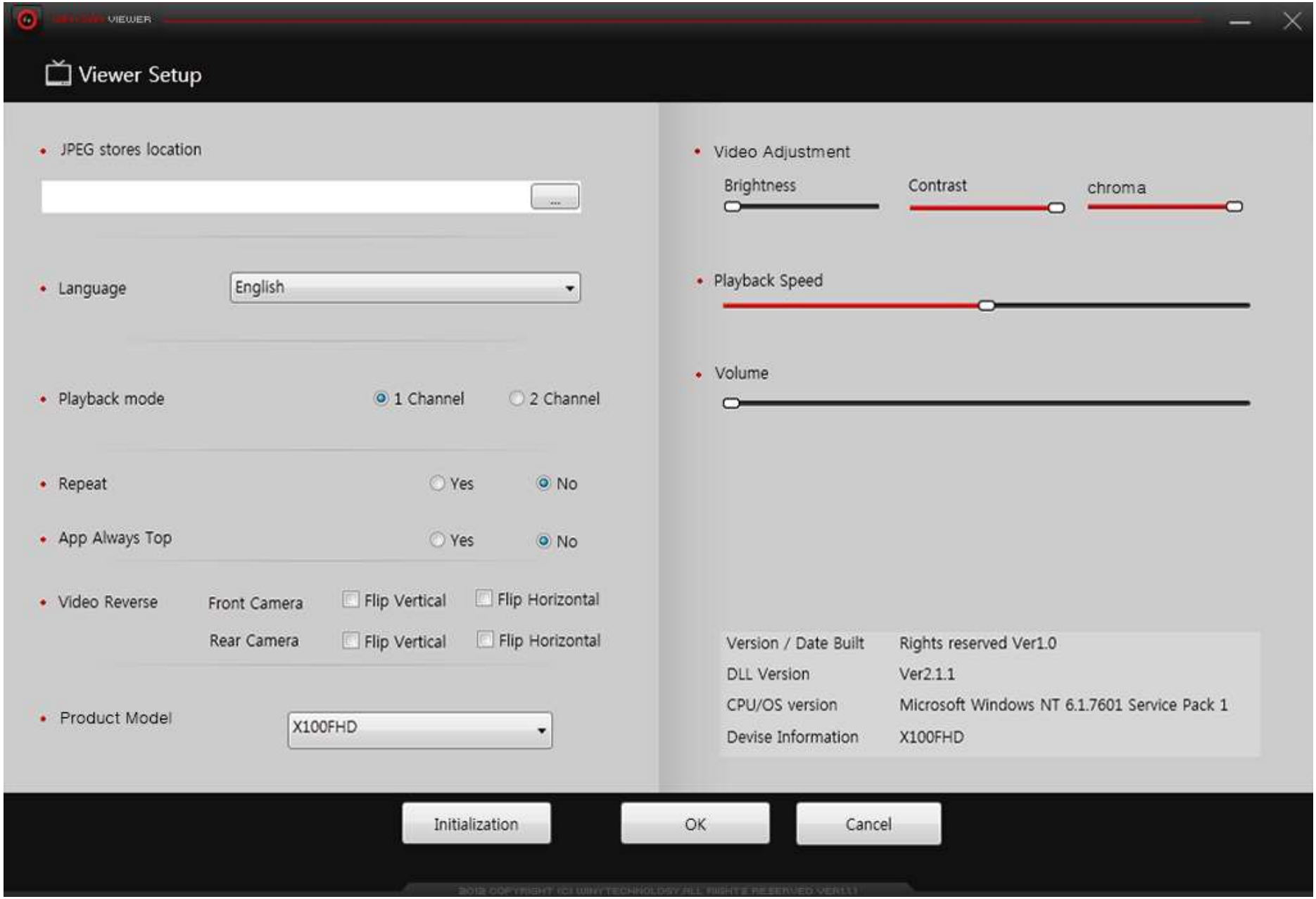

Screen Configuration

Item	Description
JPEG stores location	Set location for captured JPEG image.
Language	Select language.
Playback mode	Select display channel.
Repeat	Select repeated playback.
App Location	Select App is always the top of another window.
Video Reverse	Select video reverse.
Device Select	Select the model. (Select SX5)
Video Adjustment	Control Brightness/Contrast/Chroma.
Playback Speed	Control playback speed.
Volume	Control recording volume level.

1. Basic Configuration

Item	Description
Mode Setup	Select the recording mode
Driving Mode Frame Rate	Select the frame rate for constant recording per second.
Time Setting	Set your current time in PC
Resolution	Select recording resolution
Parking Recording Frame Rate	Select the frame rate for parking(motion) recording per second.
Set Time?	Apply set time in PC to your product
Recording Time	Select recording time for each file
Parking(Motion Recording) Mode Change	Select to use parking mode change function
LED Lightning Setting	Select front security LED lightning function
Video Quality	Select video quality
Voice Guide Volume Level	Select voice guide volume level
Time Zone	Select your location time zone
Summer Time	Select to apply summer time
Recording Volume Level	Select Recording volume level
Overwrite Function	Select to apply overwrite function
Car Constant Power Discharge Protection Function	Select to apply car constant power discharge protection function
Speed Unit Display	Select speed display kilo or mile
Video Format	Select video output format
Camera Sensor	Select Brightness, Contrast, Chroma. Back to default value after click sensor initialization
SD Card Folder Capacity Adjustment	Select the capacity of each recording mode in SD card
Operating Protection by TEMP	In “Parking REC Mode”, a recording will stop at high temperature. (Function to protect a product and SD card).

※ Before setting a configuration, please find SD card location. (refer page 22)

Viewer Configuration

Power Manage Function

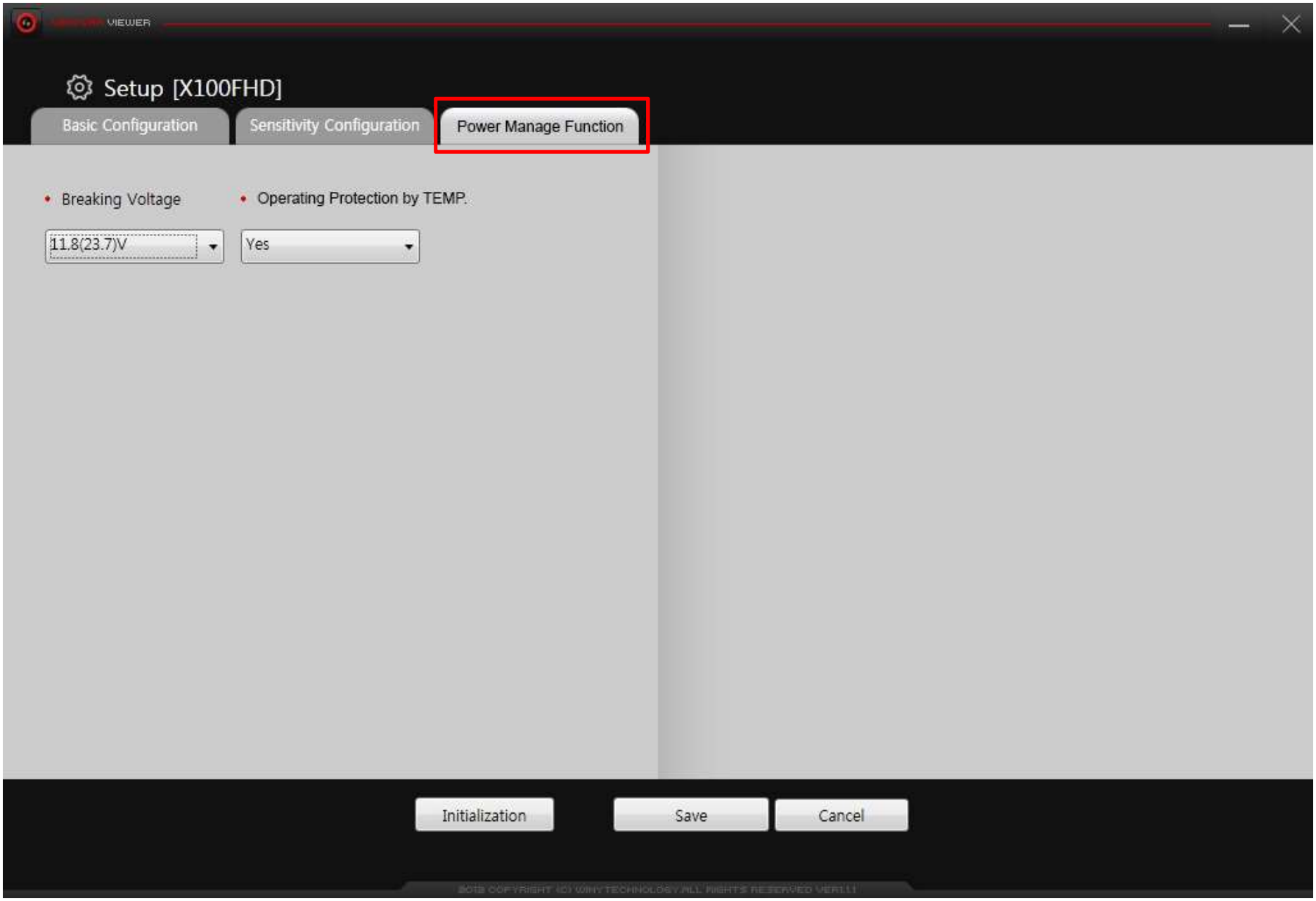

2. Sensitivity Configuration

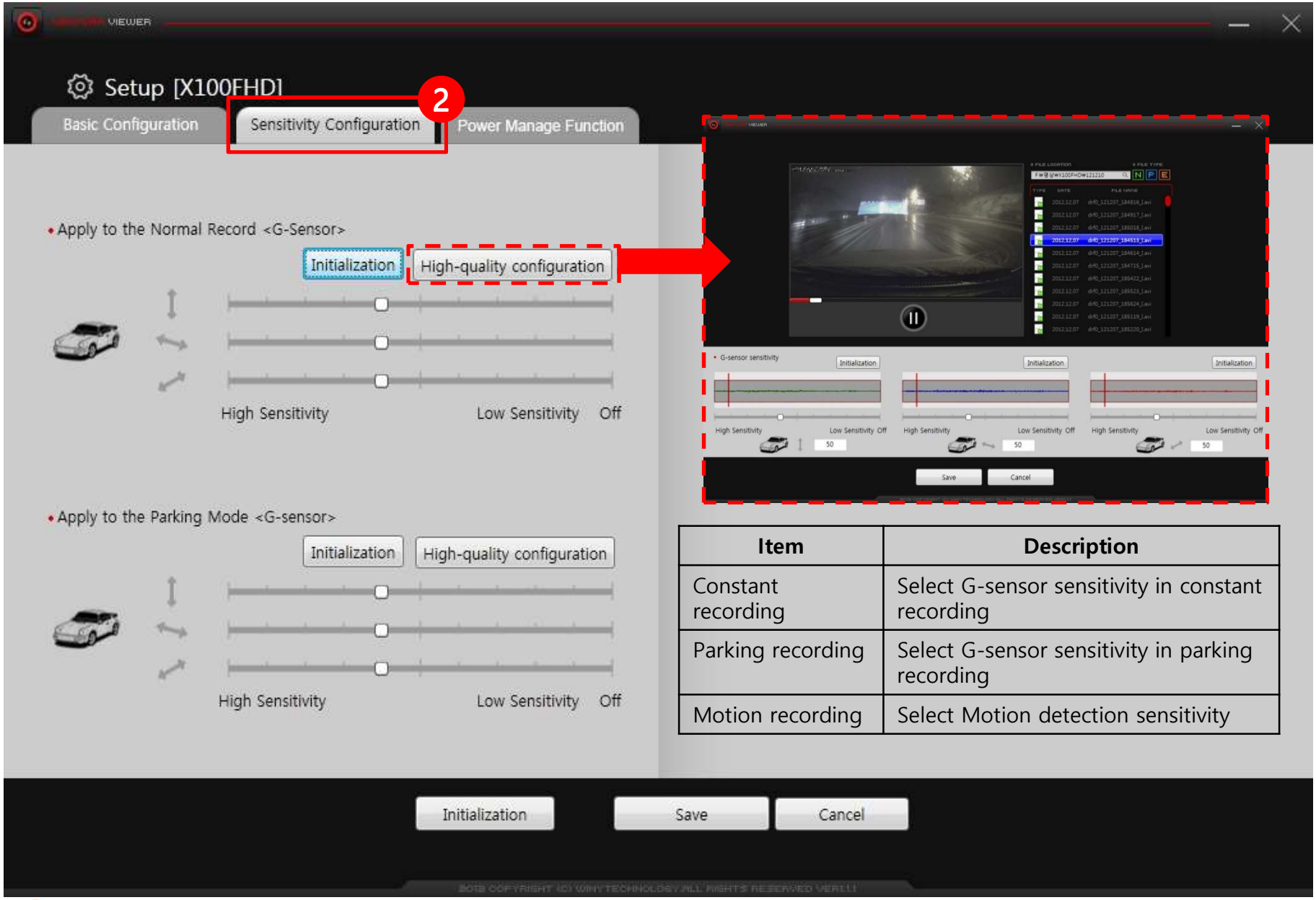

Item	Description
Constant recording	Select G-sensor sensitivity in constant recording
Parking recording	Select G-sensor sensitivity in parking recording
Motion recording	Select Motion detection sensitivity

Selectable more detail when click High-quality configuration

Configuration Default Setting

	Item	Setting Value		Item	Setting Value	
Basic Configuration	Mode Setting	Constant Recording		Driving Mode Frame Rate	30	
	Resolution	FHD (1920×1080)		Parking Mode Frame Rate	20	
	Time Setting	Setting time in PC		Set Time?	No	
	Constant Recording Time	1min		Parking Mode Change	Off	
	LED Lightning Setting	On		Video Quality	Highest Quality	
	Voice Guide Volume Level	2		Recording Volume Level	2	
	Overwrite(Event/Motion)	On		Speed Unit	Km	
	Time Zone	Korea		Video Format	PAL	
	Summer Time	No				
	Camera Sensor	Brightness		Middle		
		Contrast		Middle		
		Saturation		Middle		
	SD Card Folder Capacity Adjustment (Total 20Cell)	Movie (Constant)		10 Cells		
		Motion (Motion/Parking)		4 Cells		
		Event		6 Cells		
Power Manage Function	Breaking Voltage	11.8V(23.5V)		Operating Protection by TEMP	Yes	
Sensitivity Configuration	G-sensor Sensitivity in Constant Recording	X	Middle	G-sensor Sensitivity in Parking Recording	X	Middle
		Y	Middle		Y	Middle
		Z	Middle		Z	Middle
	Motion Detection Sensitivity	Middle				

Playback – PC

1. Playback by standard video player (GOM, Quicktimer, Window Media Player)

1) Remove SD Card from the product Open the cover of SD card slot and press the SD card.

2) Connect to PC
Insert SD card to USB card reader or adapter and connect to PC USB port.

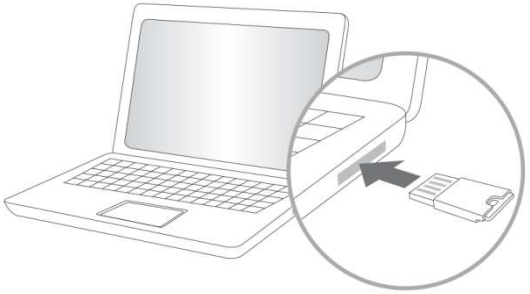

3) Playback
Open removal disc, you can see each folders. And click files to playback which is stored in each folders.

- Each recorded video is saved in below folder automatically.
Normal : Constant record
Event : Event record which is detected shock by shock sensor.
Motion : Motion record which is detected by motion detection sensor. (Parking mode)

- GPS Information is displayed in the original viewer.

Playback – PC

2. Playback in the original viewer

1~2) Same method to playback in standard video player.

3) Original Viewer
Click icon for the original viewer

4) Select product model

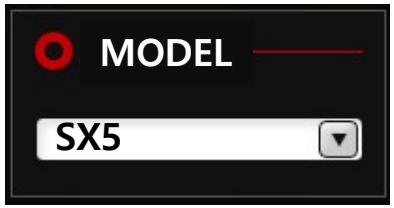

5) Select video files to playback
Click "FILE LOCATION" in original viewer on upper right. Choose file location, video file list will be shown

5-1) If you try to find folder which has no video file is saved on SD card or video file folder is saved on your PC, please find SD card location manually.

6) Playback
Click preferred video file to play back.

Firmware Update

- **Firmware Update**

1. Remove the SD card from the black box after turning off the power completely.
2. Copy the firmware file to the top position of the files in the SD card after connect the SD card to the PC.
3. Boot the power in the black box after inserting the SD card into a black box,
4. If the firmware file is automatically recognized, start to update the firmware after the voice guide to indicate the start of the firmware.
5. When the firmware update is completed, the firmware file stored in the SD card is automatically deleted and the black box is rebooted after the voice guide to indicate the completion of the firmware update.

- **Firmware File Format**

Available to change depend on year/month/date of the firmware version as bin file

SD Car Format

- **How to format SD Card if SD Card has recording error.**

1. Power ON.
2. Press REC button for a while during LED booting.
3. Voice guide "Will you format your SD Card?" will be come.
4. Press REC button short time after above voice guide, then rebooting will start "SD Card is formatted." finished.
5. After rebooting, constant recording or event recording will start.

* If you press "REC" button a little longer, it will be rebooted and even if stand-by time is over.

Specification

Item	Specification	Item	Specification
Camera	2Mega Pixel, View Angle (130 degree)	Video Output	Not supported
G-Sensor	Built in 3D speed G-sensor	Voice Recording	Microphone built-in
GPS	External GPS Module (Option)	Voice Guidance	Speaker built-in
Video Compression	H.264/AVC	Recording Media	Micro SD Card (SDHC)
Audio Compression	PCM 16bit 16KHz. mono	Power Input	DC 12V ~ 24V Free Voltage
Recording Channel	2CH		
Recording Resolution	Front: FHD(1920×1080), Rear: HD (1280x720)	Size/Weight	112(W)x62(H)x39(D)mm / 68g
FPS	30 FPS	Storage Temperature	-30 ~ +80℃
Image Quality	Highest Quality (bitrate 12Mbps – FHD Standard) High Quality (bitrate 10Mbps – FHD Standard) General Quality (bitrate 8Mbps – FHD Standard)	Operating Temperature	-20 ~ +70℃

Recordable Time

- **Below table is Recordable Time by setting value at "SD card Folder Capacity Adjustment" Based on 16GB with highest video quality(12Mbps)**

Recording mode	Folder Capacity Adjustment (%)	Record Time (Sec)	Frame Rate (FPS)		Record Time (Min)		The number of files (files)	
			Drive On	Parking On	Drive On	Parking On	Drive On	Parking On
Constant	50	60	30		92		92	
Event	30	30	30	15	56	110	112	220
Motion	20	30	15	15	74		146	
Total	Available to record 2 ~ 2hours 40minte based on 16GB SD card							

Warranty

■ Warranty
1. The products are manufactured through the strict quality control and inspection process.
2. The defect occurring in normal use of user within the warranty period will be repaired free of charge.
■ Warranty Details (Conditions)
Free Service: The defect occurring under normal use within the warranty period from the date of purchase will be repaired free of charge.
Paid Service: If the warranty period has passed.
Even within the warranty period, following cases shall be repaired at cost:
Failures caused by natural disasters (fire, lightning, flood damage, etc.)
Failures caused by carelessness using (drop, flooding, shock, breakage, excessive operation)
Failures caused by the malfunction of power in use and connected equipment.
Failures caused by any changes of a product and repaired from an unauthorized service center.

Body	Accessory	
1 Year (from purchase date)	Within 3 months	SD card, Bracket, Car cigar jack
	Excluded warrantee	Card Reader, Vided Cable (cut user's mishandling)

Accessories are not repaired free of charge. The products other than the warranty period shall not be replaced free of charge.
Important data shall be backed-up in a safe place and we shall not be responsible for any loss of the data stored in the product.

Date : D. M. Y.
Distributor :

Customer Service

Manufacture : 303-305, Bucheon Technopark, #365, Samjeong-dong, Ojeong-gu, Bucheon-si, Gyeonggi-do , Korea 421-741

Please download the user manual, program from below website
http://winycam-eng.com

WinyTechnology Co., Ltd.