K-BOW

BRIDGE THE GAP

System Description

INDOOR

System Description K-BOW Platform 2
English

KATHREIN

Contents

1	**About this Document**	**3**
1.1	Version and Version History	3
1.2	Product and Manufacturer	3
1.3	Markings	3
1.4	Target Audience	4
1.5	Scope of the Document	4
1.6	Applicable Documents	4
1.7	Abbreviations	4
1.8	Disclaimer	5
2	**General Information**	**6**
2.1	IC Warnings	6
2.2	FCC Warnings	6
2.3	Intended Use	8
3	**System Overview**	**9**
3.1	Architecture	9
3.2	Networking Layout	10
3.3	Main Functionality	11
4	**WLAN Access (Wi-Fi)**	**13**
5	**Glossary**	**15**
6	**List of Diagrams**	**16**
7	**List of Tables**	**16**

1 About this Document

1.1 Version and Version History

Version

0.92, April 2017

Version History

Version	Date	Description
0.91	March 2017	First release version
0.92	April 2017	Second release version

1.2 Product and Manufacturer

Item	Description
Product type	Capacity distribution system: K-BOW platform 2
Manufacturer's address	see last page

1.3 Markings

Symbol *Symbole*	Description		Symbol *Symbole*	Description
	General hazard indication *Avertissement général*			Danger due to laser light *Danger par lumière laser*
	Risk of damage to property *Risque de dommages matériels*			Laser light class 1 *Classe 1 laser*
	Danger due to electricity *Danger électrique*			Crushing hazard *Risque d'écrasement*
	Hot surface *Surface chaude*			Non-ionising radiation radio frequency *Rayonnements non-ionisants de fréquence radio*
	Danger due to rotating fan blades *Danger par des pales en rotation*			

Signal words *Mentions d'avertis-sement*	Description
Danger	Immediate risk of death or serious physical injury *Risque immédiat de mort ou blessures corporelles graves*
Warning ***Avertis-sement***	Possible risk of death or serious physical injury *Risque potentiel de mort ou blessures corporelles graves*
Caution ***Prudence***	Possible risk of slight or moderately severe physical injury *Risque potentiel de blessures corporelles légères ou moyennement graves*
Notice ***Attention***	Potential damage to property *Risque de dommages matériels*
Tip ***Avis***	Instruction for operation or use of the instructions *Instructions d'emploi ou d'utilisation des instructions*

Tab. 1: Symbols and signal words

1.4 Target Audience

These instructions are targeted at persons who

- are familiar with the applicable terms and skills when installing and operating electrical systems for telecommunications (mobile telephony and data distribution systems).
- because of their technical training, knowledge and experience, together with the knowledge of the applicable regulations are able to assess the following work and recognise potential hazards:
  - Installation of devices for transmission of messages and data
  - Making up and connecting data transmission cables (LAN)
  - Making up and connecting power supply cables
  - Laying and connecting optical cables (fibre optic cables)

1.5 Scope of the Document

Tip This document describes the K-BOW platform 2, only. The K-BOW platform 1 is described in separate documents.

The present document applies to the following radio equipment types:

1.6 Applicable Documents

The documents applicable for the system description are

1.7 Abbreviations

See *Glossary*, p. 15.

1.8 Disclaimer

Changes or modifications not expressly approved by the party responsible for compliance could void the user's authority to operate the equipment.

The information and documentation contained in this document is strictly confidential and disclosed to the recipient only due to his/her particular relation to the KATHREIN-Werke KG.
The content of this document is protected by copyright law. It is prohibited to exploit, divulge or use the document or any information contained therein, also in parts, without the explicit prior permission of KATHREIN-Werke KG.
This document serves for informative purposes only and shall not bind KATHREIN-Werke KG in any way unless explicitly stated.
The content has been compiled to the best knowledge of KATHREIN-Werke KG.
Any warranty for actuality, completeness and correctness of the information contained in this document shall be excluded.

2 General Information

2.1 IC Warnings

Note This device complies with Industry Canada license-exempt RSS standard(s). Operation is subject to the following two conditions:
(1) this device may not cause interference, and
(2) this device must accept any interference, including interference that may cause undesired operation of the device.

Le présent appareil est conforme aux CNR d'Industrie Canada applicables aux appareils radio exempts de licence. L'exploitation est autorisée aux deux conditions suivantes :
(1) l'appareil ne doit pas produire de brouillage, et
(2) l'utilisateur de l'appareil doit accepter tout brouillage radioélectrique subi, même si le brouillage est susceptible d'en compromettre le fonctionnement.

2.2 FCC Warnings

(1)

Note This device complies with Part 15 of the FCC Rules. Operation is subject to the following two conditions:
(1) this device may not cause harmful interference, and
(2) this device must accept any interference received, including interference that may cause undesired operation.

(2)

Note This equipment has been tested and found to comply with the limits for a Class A digital device, pursuant to Part 15 of the FCC Rules. These limits are designed to provide reasonable protection against harmful interference in a residential installation. This equipment generates, uses and can radiate radio frequency energy and, if not installed and used in accordance with the instructions, may cause harmful interference to radio communications. However, there is no guarantee that interference will not occur in a particular installation.

If this equipment does cause harmful interference to radio or television reception, which can be determined by turning the equipment off and on, the user is encouraged to try to correct the interference by one or more of the following measures:

- Reorient or relocate the receiving antenna.
- Increase the separation between the equipment and receiver.
- Connect the equipment into an outlet on a circuit different from that to which the receiver is connected.
- Consult the dealer or an experienced radio/TV technician for help.

(3)

Note	Only authorized person can enter the area where the antenna is installed. And the person is fully aware of the potential for exposure and can exercise control over his or her exposure by leaving the area or by some other appropriate means. Awareness of the potential for RF exposure in a workplace or similar environment can be provided through specific training as part of a RF safety program

(4)

Warning

Changes or modifications to this equipment not expressly approved by KATHREIN could void the user's authority to operate the equipment. At least two persons are required to carry 19" racks to avoid injuries.

(5)

Warning

Antenna gain should not exceed 7 dBi.

(6)

Warning

To comply with FCC RF exposure compliance requirements, each individual antenna used for this transmitter must be installed to provide a separation distance greater than 205 cm or more from all persons during normal operation and must not be co-located with any other antenna for meeting RF exposure requirements.

(7)

Warning

This is NOT a CONSUMER device. It is designed for installation by FCC LICENSEES and QUALIFIED INSTALLERS. You MUST have an FCC LICENSE or express consent of an FCC License to operate this device. Unauthorized use may result in significant forfeiture penalties, including penalties in excess of $100,000 for each continuing violation.

2.3 Intended Use

The K-BOW system is a micro C-RAN solution to provide flexible and efficiently scalable coverage and capacity for multi-operator and multi-band scenarios using a common infrastructure. The system offers mobile radio single routing capabilities to support flexible sectoring for network load balancing as well as individual signal power optimization of remote RF unit level. The system use cases are the following:

- Operating K-BOW as a repeater by
  - interfacing cable based RF signals from base stations to the C-hub,
  - relaying the radio signal of the base stations into at least one or multiple radio cells via remote units with antennas connected to these using coaxial cables,
- Routing base station signals
- Supporting MIMO operation on selected bands

3 System Overview

3.1 Architecture

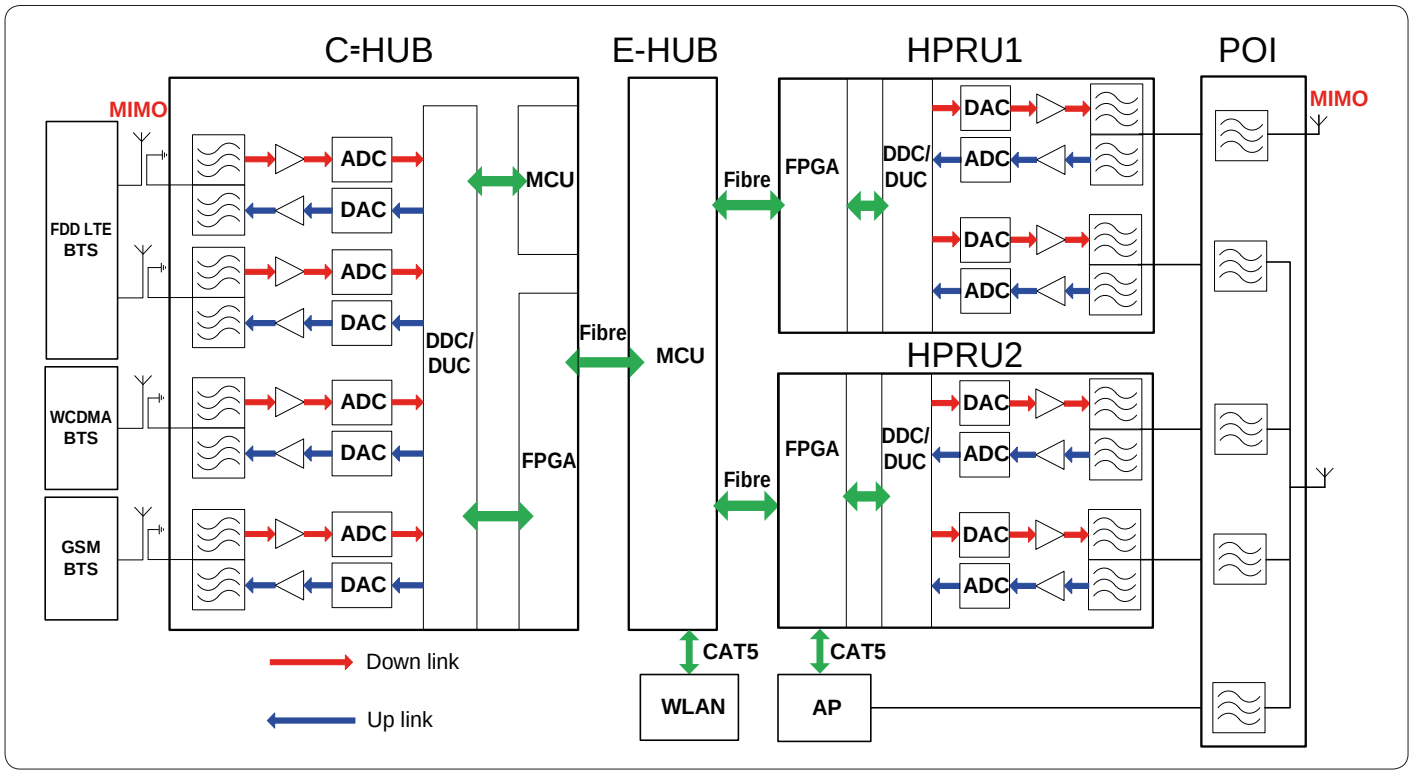

Fig. 1: System architecture

3.2 Networking Layout

K-BOW enables different networking layouts as shown in Fig. 2. The following applies:

C-hub

- The C-hub supports a star network:
- The Master C-hub can connect to a maximum of 2 slave C-hubs simultaneously.
- A maximum of 5 slave devices including E-hub and RU cascade per fibre port of C-hub.

E-hub

- The E-hub supports a daisy-chained network (E-hub to E-hub) and a star-type network (E-hub to HPRU).
- In smaller systems, the C-hub and RU can be directly connected without the E-hub, as shown in Fig. 2.
- For a direct C-hub to RU connection, an RU can cascade up to 5 RUs at different levels. For a C-hub to E-hub to RU connection, an RU can cascade up to 4 RUs at different levels.

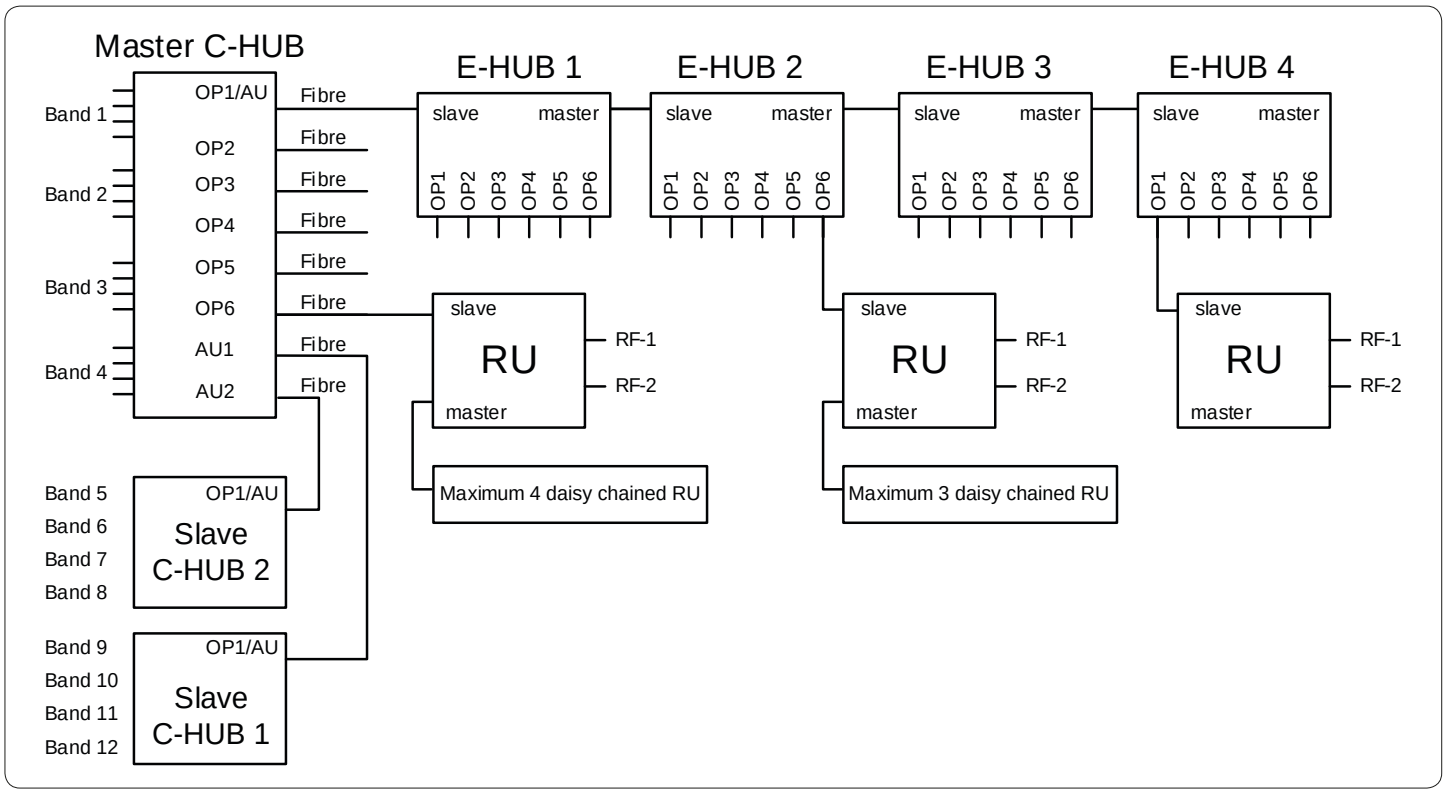

Fig. 2: Networking layout

3.3 Main Functionality

The system includes the access unit (C-hub), expansion unit (E-hub) and remote unit (RU).

3.3.1 C-Hub

- Frame radio-frequency signals from base stations of different base transceiver stations of different operators, and of different standards and frequency bands.
- Convert the analog signal to digital signals using ADC technology
- Transmit the composite signal to the E-hub and RU.

Fig. 3: C-hub front view

3.3.2 C-Hub Module

- Each module has four SMA-F ports which support up to 4 different inputs within the frequency band.
- Each port can support up to +15 dBm input and respective ALC can reduce the input power.

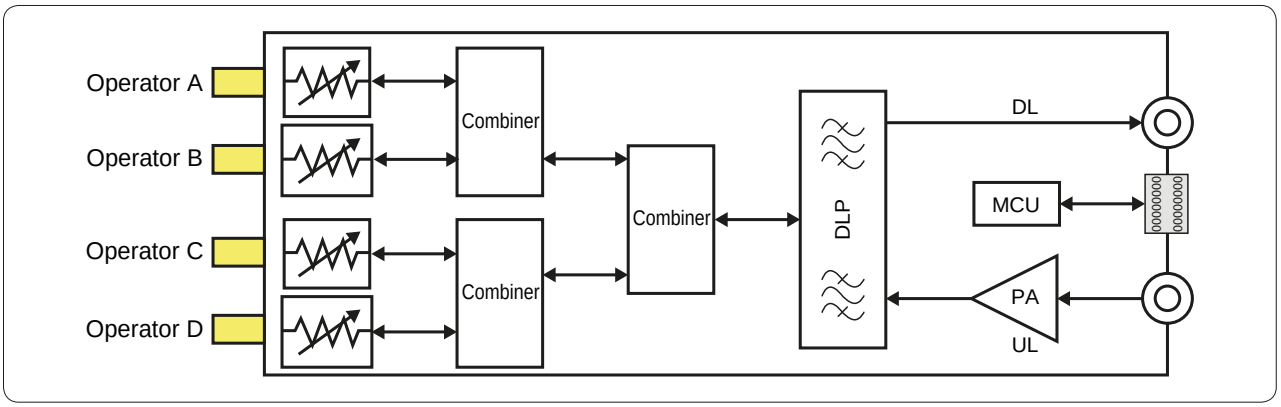

Fig. 4: C-hub module

3.3.3 E-Hub

- Receive the WLAN and small cell signals base station via 6 GigE Ethernet ports.
- Reframe with optical signal from the C-hub.
- Transmit the composite signal to next level E-hub and RU.

Fig. 5: E-hub front view

3.3.4 HPRU

- Conduct digital-analog conversion and power amplification of the input signals.
- Each RU can support up to 2 RF signals output with different frequency bands.
- Redistribute WLAN and small cell signals via an Ethernet port.
- Achieve radio coverage through the antenna feeder system for signals of all standards and frequency bands.

Fig. 6: HPRU

4 WLAN Access (Wi-Fi)

Each E-hub has 6 electrical ports, GE1 to GE6, which support up to 6 LAN signals. LAN signals are input on the GE1 to GE6 ports and output from the corresponding OP1 to OP6 ports. The signals are then transmitted to the RUs via optical signals over optical fibre and output from the GE port on the RU. Each RU connects to an AP device through their respective GE port. Thus, 6 independent Gigabit Ethernet transmission channels can be completed. See Fig. 7 for connection details and Fig. 8 for application scenario.

The flow path of the signal is: Input LAN signals ↔ E-hub ↔ RU ↔ AP ↔ POI ↔ Antenna-feeder system. The following applies:

- Each electrical port (GE1 to GE6) must correspond to an optical port (OP1 to OP6), i.e. GE1 should correspond to OP1, GE2 should correspond to OP2, etc. WLAN signal input on GE1 is then sent out on OP1.
- If there are multiple access points (AP) that are connected to more than one cascading RU in a signal chain, the WLAN signal will only be output from one of the RUs, with the priority being RU1 > RU2 > RU3 when selecting which RU the signal will be output from.
- If there is only one AP device, then the WLAN signal is always output from the RU that is connected to the AP.

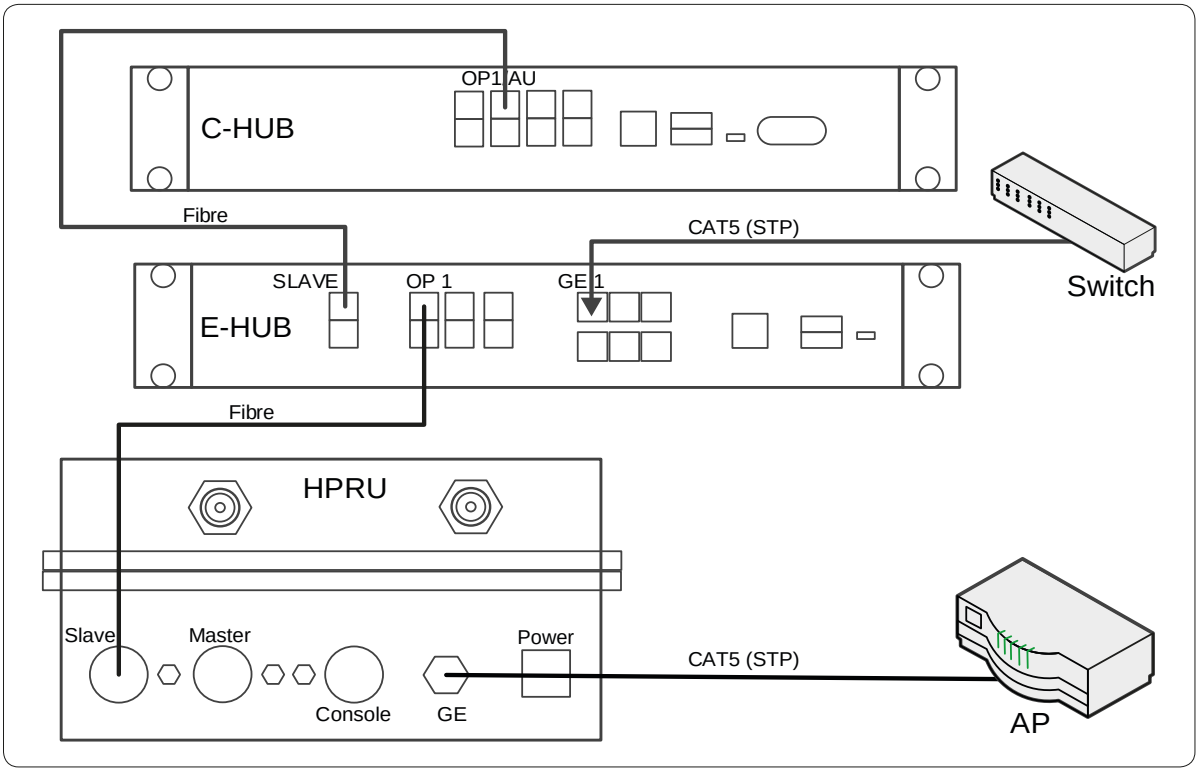

Fig. 7: WLAN access

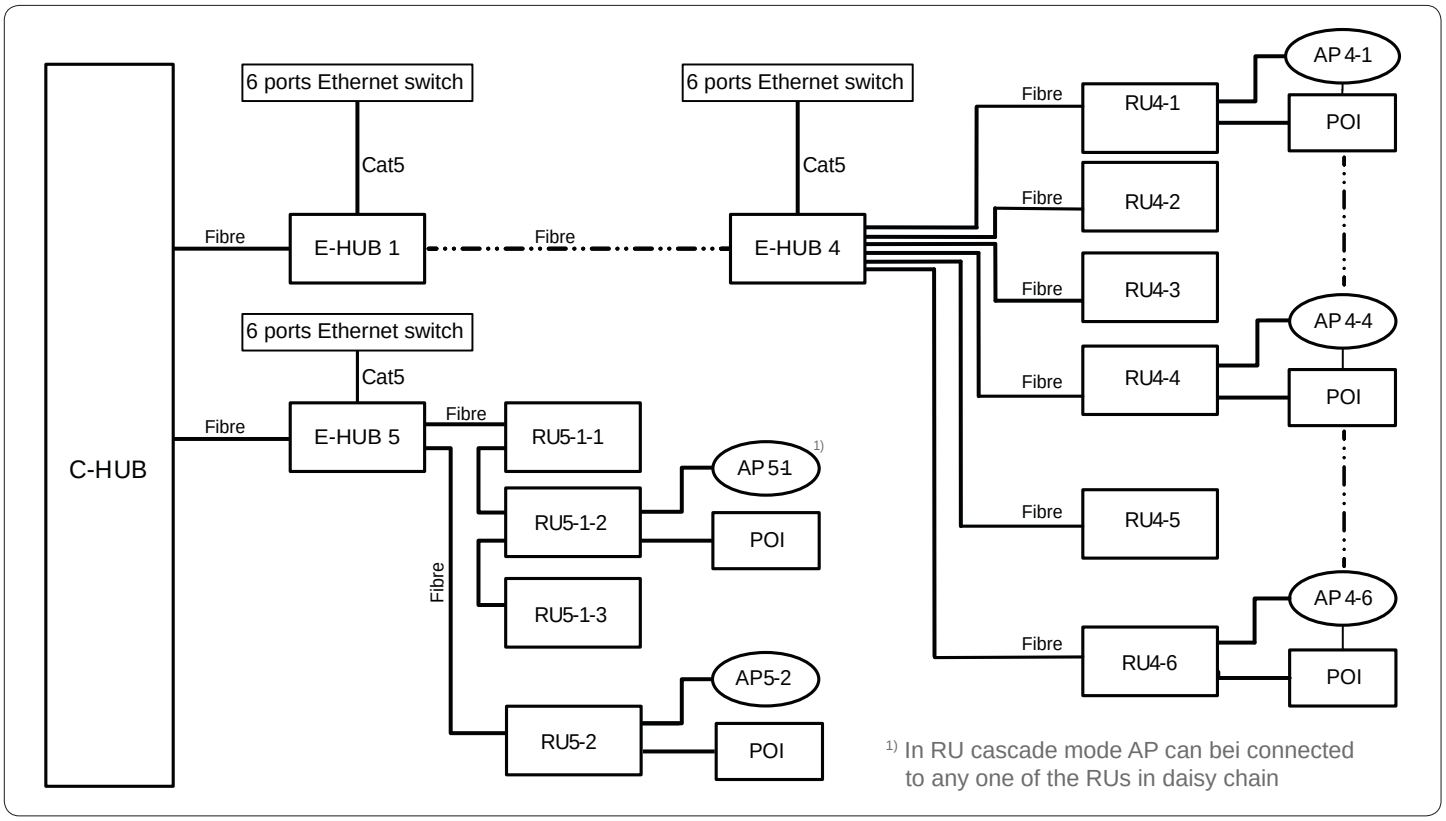

Fig. 8: Example for WLAN application

5 Glossary

Abbreviation	Description
ADC	Analog to digital converter
AP	Access point
BTS	Base transceiver station
C-hub	Central hub
CB	Carrier bundle
CP	
DAC	Digital to analog converter
DDC	Digital down convert
DL	Downlink
DUC	Digital up convert
E-hub	Expansion hub
FDD	Frequency division duplexing
FPGA	Field programmable gate array
GSM	Global system for mobile communications
HPRU	High power remote unit
LTE	Long term evolution
NMS	Network management system
OMT	Operations and maintenance terminal
OP	Optical fibre
PA	Power amplifier
POI	Point of interface
RF	Radio frequency
RU	Remote unit
RX	Receiver
SNMP	Simple network management protocol
STP	Shielded twisted pair
TDD	Time division duplexing
TX	Transmitter
UL	Uplink
WCDMA	Wideband code division multiple access
WLAN	Wireless local area network

6 List of Diagrams

Fig. 1: System architecture 9
Fig. 2: Networking layout 10
Fig. 3: C-hub front view 11
Fig. 4: C-hub module 11
Fig. 5: E-hub front view 12
Fig. 6: HPRU 12
Fig. 7: WLAN access 13
Fig. 8: Example for WLAN application 14

7 List of Tables

Tab. 1: Symbols and signal words 4

936.5465/0.92/ICS/0417/GB I Subject to change Copyright © Kathrein Solutions GmbH 2017 All Rights Reserved Title: istock.com I derrek

KATHREIN Solutions GmbH
Anton-Kathrein-Straße 1 – 3
83004 Rosenheim, Germany
Phone +49 8031 184-0
www.kathrein.com I k-bow@kathrein.de

KATHREIN

K-BOW

BRIDGE THE GAP

Start-up and Configuration

INDOOR

Start-up & Configuration Manual K-BOW Platform 2
English

KATHREIN

Contents

1	**About this Document**	**4**
1.1	Version and Version History	4
1.2	Product and Manufacturer	4
1.3	Markings	4
1.4	Target Audience	5
1.5	Scope of the Document	5
1.6	Applicable Documents	5
1.7	Abbreviations	6
1.8	Disclaimer	6
2	**General Information**	**7**
2.1	General Safety Instructions	7
2.2	Safety Requirements for the Installation Locations	9
2.3	Electrical and Mechanical Safety	10
2.4	IC Warnings	11
2.5	FCC Warnings	11
2.6	Intended Use	13
2.7	K-BOW System Architecture	13
2.8	Qualification of the Personnel	13
2.9	Preconditions and Requirements	13
3	**Powering up the System and Checking the Status LEDs**	**14**
4	**Accessing the Devices' Web Interface (Web GUI)**	**15**
4.1	Requirements	15
4.2	Network Functionality	15
4.3	Accessing the Web GUI Using Ethernet via C-Hub	15
4.4	Accessing the Web GUI Using Ethernet via Slave Hubs/RUs	17
4.5	Accessing the Web GUI using WLAN	18
4.6	Structure of the Web GUI	18
5	**Setting up the C-Hub**	**19**
5.1	Check the Modules' Connection Status	19
5.2	Set the Device Identification	20
5.3	Set the SNMP and FTP Parameters	21
5.4	Update the K-BOW System Software	21
5.5	Configure the Band	23
5.6	Configure the Input Power	24
5.7	Configure the Band Gain	26
5.8	Configure the Alarm	27
6	**Setting up the E-Hub**	**29**
6.1	Query the Status of the E-Hubs	29
6.2	Configure the Alarms	29
7	**Setting up the Remote Units**	**30**
7.1	Query the Status of the Remote Units	30
7.2	Configure the Band Gain	30

7.3 Configure the Alarms 31
8 Structure of the Web GUI 32
8.1 Starting the Web GUI – Overview 32
8.2 Master C-Hub 33
8.3 Master/Slave E-Hub 45
8.4 HPRU 49
9 Glossary 57
10 List of Diagrams 62
11 List of Tables 63

1 About this Document

1.1 Version and Version History

Version

0.92, April 2017

Version History

Version	Date	Description
0.91	March 2017	First release version
0.92	April 2017	Second release version

1.2 Product and Manufacturer

Item	Description
Product type	Capacity distribution system: K-BOW platform 2
Manufacturer's address	See last page

1.3 Markings

Symbol *Symbole*	Description
	General hazard indication *Avertissement général*
	Risk of damage to property *Risque de dommages matériels*
	Danger due to electricity *Danger électrique*
	Hot surface *Surface chaude*
	Danger due to rotating fan blades *Danger par des pales en rotation*

Symbol *Symbole*	Description
	Danger due to laser light *Danger par lumière laser*
	Laser light class 1 *Classe 1 laser*
	Crushing hazard *Risque d'écrasement*
	Non-ionising radiation radio frequency *Rayonnements non-ionisants de fréquence radio*

Signal words *Mentions d'avertis-sement*	Description
Danger	Immediate risk of death or serious physical injury *Risque immédiat de mort ou blessures corporelles graves*
Warning ***Avertis-sement***	Possible risk of death or serious physical injury *Risque potentiel de mort ou blessures corporelles graves*
Caution ***Prudence***	Possible risk of slight or moderately severe physical injury *Risque potentiel de blessures corporelles légères ou moyennement graves*
Notice ***Attention***	Potential damage to property *Risque de dommages matériels*
Tip ***Avis***	Instruction for operation or use of the instructions *Instructions d'emploi ou d'utilisation des instructions*

Tab. 1: Symbols and signal words

1.4 Target Audience

These instructions are targeted at persons who

- are familiar with the applicable terms and skills when installing and operating electrical systems for telecommunications (mobile telephony and data distribution systems).
- because of their technical training, knowledge and experience, together with the knowledge of the applicable regulations are able to assess the following work and recognise potential hazards:
  - Installation of devices for transmission of messages and data
  - Making up and connecting data transmission cables (LAN)
  - Making up and connecting power supply cables
  - Laying and connecting optical cables (fibre optic cables)

1.5 Scope of the Document

Tip This document describes the K-BOW platform 2, only. The K-BOW platform 1 is described in separate documents.

This document describes the installation of the K-BOW hubs, beginning from the BTS handover point[1)] to the E-hub. It describes the general requirements to the installation location, techniques for laying cables and refers to the applicable documents.

1) The BTS handover point is the point after the remote radio head or power amplifier of the BTS in which the BTS signal is tapped for the K-BOW system.

1.6 Applicable Documents

The documents applicable for the system description are

1.7 Abbreviations

See *Glossary*, p. 57.

1.8 Disclaimer

The information and documentation contained in this document is strictly confidential and disclosed to the recipient only due to his/her particular relation to the KATHREIN-Werke KG.
The content of this document is protected by copyright law. It is prohibited to exploit, divulge or use the document or any information contained therein, also in parts, without the explicit prior permission of KATHREIN-Werke KG.
This document serves for informative purposes only and shall not bind KATHREIN-Werke KG in any way unless explicitly stated.
The content has been compiled to the best knowledge of KATHREIN-Werke KG.
Any warranty for actuality, completeness and correctness of the information contained in this document shall be excluded.

2 General Information

2.1 General Safety Instructions

- Install the system only after you have read and understood the following documents:
  - This document
  - *K-BOW Safety Instructions*
  - *K-BOW Setup Manual*
- This document is an integral part of the K-BOW system.
- Read all K-BOW documentation completely, especially
  - before installing a K-BOW system,
  - before the first start-up,
  - before operating a K-BOW system,
  - before performing any changes,
  - for regularly refreshing your knowledge about it.
- Keep the K-BOW documents for reference throughout the life of the system. Pass the K-BOW documents on to the next owner and user of the system.
- Read the installation instructions before starting the installation.
- The system documentation must always be available at the installation location.
  The system documentation comprises at least the following documents:
  - *K-BOW Safety Instructions*
  - *K-BOW Installation Manual for HUB*
  - *K-BOW Setup Manual*
  - *K-BOW System Description*
  - *K-BOW Installation Manual for Remote Units*
  - *K-BOW Operation and Maintenance*
- Always perform the measures described in the K-BOW documents in the sequence specified.
- Observe extension cord and power strip ratings. Make sure that the total ampere rating of all products plugged into the extension cord or power strip does not exceed 80% of the extension cord or power strip ampere rating limit.
- Do not modify power cords or plugs. Consult a licensed electrician or your power company for site modifications. Always follow your local and national wiring rules.
- The K-BOW equipment is intended to be earthed. Ensure that the racks are connected to a protective earthing conductor during normal use.
- When installing a K-BOW system, always connect it to a protective earthing conductor first and disconnect it last.
- The K-BOW system relies on the building installation for short-circuit (overcurrent) protection. Ensure that the protective device is rated in accordance with the configured K-BOW system.

- Protection against electrostatic discharge.
  Static electricity might harm sensitive components. To prevent this damage, discharge static electricity from your body before you touch equipment. You can also take the following steps to prevent damage that might result from electrostatic discharge.
  - When transporting equipment, first place it in an antistatic container or packaging.
  - Do not leave equipment where other people can handle and possibly damage it.
  - Take additional care when handling equipment during cold weather.
  - Take into account that heating reduces indoor humidity and increases static electricity.
- If any of the following conditions occur, immediately unplug the entire K-BOW system and contact an authorised technician.
  - The power cable, extension cord, or plug is damaged.
  - A foreign object has entered the equipment.
  - The equipment has been exposed to any liquid.
  - The equipment has been dropped or damaged.
  - A serious damage is visible on the housing.
  - The equipment does not operate correctly when you follow its operating instructions.

  Do not switch on the system until
  - the single component has been repaired by the manufacturer,
  - damaged cables have been repaired or replaced by instructed service personnel.
- Do not cover any kind of forced air openings and passive heat-sink fins.
- Protect the system and all its components from any liquid.
- Do not open the housing of single components.
- Observe the respective manufacturer's manual when connecting an external device that is not described in the K-BOW documentation. Incorrectly connected devices can damage the system.
- Improper operation can damage the hardware of the system and can affect its function.
- The necessary personal protective equipment for the operating, maintenance and repair personnel must be accessible at any time.
- Safety and warning stickers on the systems and components must be clearly legible at any time and may not be removed.
  Replace any damaged warning stickers and attach new ones where missing.
- Take all necessary measures to attain the safety of the system. It is the operator's duty of care to plan these measures and make sure that they are duly carried out.
- The K-BOW communication system was developed and manufactured with due regard to the applicable safety standards stated in the *K-BOW Safety Instructions*, as well as further technical specifications.
  The product is state of the art and guarantees the highest possible degree of safety.
- When installing the K-BOW system, comply with local and national electrical codes.

2.2 Safety Requirements for the Installation Locations

2.2.1 General

- Install the K-BOW system indoors only and as a stationary system in weather-protected and temperature-controlled locations.
- Comply with the permissible ambient conditions stated in the data sheets of the K-BOW components.
- Ensure that only authorised personnel are allowed access to the installation location(s) of the system rack (main rack and extension racks).

2.2.2 Installation Location of System Racks

The installation location of system racks must satisfy the following requirements:

- The static loading calculations must ensure that a rack up to 500 kg in weight can be erected and operated.
- The permissible ambient temperature range of the system is –5 to +55 °C (ambient air).[1)]
- If required, install active cooling (air conditioning) to ensure the permissible ambient temperature of the system is satisfied.
- The safety clearance between adjoining systems must be complied with. See the specifications of the companies operating the adjoining systems.
- If you use racks other than those recommended by Kathrein, make sure that the following conditions are satisfied:
  - All height units not used must be blanked off.
  - The door must permit the passage of air over its entire surface, for instance by perforation.
  - The cooling air must flow through the rack from the front between the K-BOW components, upwards and to the back where it is exhausted.
  - The cooling air fans at the top of the rack must be capable of a throughput of ≥ 960 m^3/h unimpeded air flow.

[1)] The permissible ambient temperature range applies to the racks recommended by Kathrein. These racks ensure optimum dissipation of heat.

2.3 Electrical and Mechanical Safety

Warning

Risk of injury due to electricity.

- All K-BOW racks must be connected to a protective earthing conductor.
- It is recommended to earth the remote units to ensure their electromagnetic compatibility (EMC).
- Do not connect system components to the power supply during installation. Connection to the power supply must be performed by a trained, qualified and authorised specialist.
- Only install and uninstall system components if they are de-energised. Exceptions: plug-in modules. For PSU modules, observe the following points:
  - *Installation*: First, push the PSU module completely into the PDU/FSR/BSR, then plug the power supply cable into the PSU module.
  - *Removal*: First, unplug the power supply cable from the PSU module, then remove the PSU module from the PDU/FSR/BSR.
- Do not touch parts that are at a hazardous voltage. This also applies if fuses inside the device have been removed.
  The system has a supply voltage of up to 240 V alternating voltage. If touched, there is a risk of death due to electric shock.
- Install the socket near the equipment and make sure it is easily accessible.
- If cables are run in cable trays, earth cables and live cables must be separated by walls from RF coaxial and fibre optic cables. Observe the guidelines in the *K-BOW Installation Manual for HUB*.
- An appropriate fuse protection for all power supply feed lines of the K-BOW system protection must be provided by the customer.
  All power supply feed lines of the K-BOW system must be equipped with an overvoltage protector for medium voltage loads and automatic circuit breakers (delay fuse) of 10 A max. for overcurrent protection.
  The correct performance must be checked and recorded according to current regulations.
- Only IEC-60320 C13/C14 power supply cables and appliance couplers specified for 10 A min. continuous load are allowed.
- Unplug the power cable(s) of a switched-mode power supply to completely disconnect the power supply unit and the connected devices from the mains. If redundant switched-mode power supplies are used, unplug the power cables of all power supply units concerned.
- All fuses inside the system may only be replaced by original parts.

2.4 IC Warnings

Note This device complies with Industry Canada license-exempt RSS standard(s). Operation is subject to the following two conditions:
(1) this device may not cause interference, and
(2) this device must accept any interference, including interference that may cause undesired operation of the device.

Le présent appareil est conforme aux CNR d'Industrie Canada applicables aux appareils radio exempts de licence. L'exploitation est autorisée aux deux conditions suivantes :
(1) l'appareil ne doit pas produire de brouillage, et
(2) l'utilisateur de l'appareil doit accepter tout brouillage radioélectrique subi, même si le brouillage est susceptible d'en compromettre le fonctionnement.

2.5 FCC Warnings

(1)

Note This device complies with Part 15 of the FCC Rules. Operation is subject to the following two conditions:
(1) this device may not cause harmful interference, and
(2) this device must accept any interference received, including interference that may cause undesired operation.

(2)

Note This equipment has been tested and found to comply with the limits for a Class A digital device, pursuant to Part 15 of the FCC Rules. These limits are designed to provide reasonable protection against harmful interference in a residential installation. This equipment generates, uses and can radiate radio frequency energy and, if not installed and used in accordance with the instructions, may cause harmful interference to radio communications. However, there is no guarantee that interference will not occur in a particular installation.

If this equipment does cause harmful interference to radio or television reception, which can be determined by turning the equipment off and on, the user is encouraged to try to correct the interference by one or more of the following measures:

- Reorient or relocate the receiving antenna.
- Increase the separation between the equipment and receiver.
- Connect the equipment into an outlet on a circuit different from that to which the receiver is connected.
- Consult the dealer or an experienced radio/TV technician for help.

(3)

Note	Only authorized person can enter the area where the antenna is installed. And the person is fully aware of the potential for exposure and can exercise control over his or her exposure by leaving the area or by some other appropriate means. Awareness of the potential for RF exposure in a workplace or similar environment can be provided through specific training as part of a RF safety program

(4)

Warning

Changes or modifications to this equipment not expressly approved by KATHREIN could void the user's authority to operate the equipment. At least two persons are required to carry 19" racks to avoid injuries.

(5)

Warning

Antenna gain should not exceed 7 dBi.

(6)

Warning

To comply with FCC RF exposure compliance requirements, each individual antenna used for this transmitter must be installed to provide a separation distance greater than 205 cm or more from all persons during normal operation and must not be co-located with any other antenna for meeting RF exposure requirements.

(7)

Warning

This is NOT a CONSUMER device. It is designed for installation by FCC LICENSEES and QUALIFIED INSTALLERS. You MUST have an FCC LICENSE or express consent of an FCC License to operate this device. Unauthorized use may result in significant forfeiture penalties, including penalties in excess of $100,000 for each continuing violation.

2.6 Intended Use

The K-BOW system is a micro C-RAN solution to provide flexible and efficiently scalable coverage and capacity for multi-operator and multi-band scenarios using a common infrastructure. K-BOW offers mobile radio single routing possibilities to support flexible sectorising for network load balancing as well as individual signal power optimisation of remote RF unit level. Therefore, the applicable use cases are the following:

- Operating K-BOW as a repeater by
  - interfacing the C-HUB cable-based with the RF ports of mobile radio base stations and
  - relaying the radio signal of the base stations into at least one or multiple radio cells via remote units with either integrated antennas or antennas connected to remote units by coaxial cables
- Routing of base station radio signals
- MIMO support of selected bands by using the integrated MIMO antennas within the remote units or by connecting two antennas to the remote units

2.7 K-BOW System Architecture

The K-BOW system architecture is described in the document *K-BOW System Description*.

2.8 Qualification of the Personnel

The personnel who installs, calibrates, operates, maintains and repairs the K-BOW system must

- be authorised and suitably qualified,
- be regularly instructed and trained in all issues concerning operational safety and environmental protection, and
- know the system documentation and the safety instructions contained therein.

2.9 Preconditions and Requirements

Warning

Risk of injury due to incomplete installation.

► The measures described in the *Installation Manual (K-BOW Platform 2)* must be fully completed before implementing the measures indicated in this document.

► Make sure the *Installation Manual (K-BOW Platform 2)* is present, so that, where necessary, the cabling can be checked and the safety instructions are available.

3 Powering up the System and Checking the Status LEDs

1. Make sure that the measures described under 2.9, p. 13 are fully completed.
2. Plug the power supply cables of the K-BOW components into the mains power sockets to power them on. In doing so, observe the specifications in the planning document for the system.
3. Wait 5 minutes while the system is booting.
4. Check the status LEDs of the devices:
   ⇨ Are the green SYS LEDs[1)] flashing slowly?
   ⇨ Are the remote units' green OP LEDs[1)] flashing?

[1)] For more information see the *Installation Manual (K-BOW Platform 2)*, Section *Cabling ▸ Interfaces*.

4 Accessing the Devices' Web Interface (Web GUI)

Topics

Requirements, p. 15
Network Functionality, p. 15
Accessing the Web GUI Using Ethernet via C-Hub, p. 15
Accessing the Web GUI Using Ethernet via Slave Hubs/RUs, p. 17

4.1 Requirements

The devices' web interface (web GUI) is compatible with common operating systems such as Apple MAC OS, Windows XP or higher. Unless otherwise indicated, the examples use the Windows XP operating system and the Internet Explorer 8 web browser.

4.2 Network Functionality

The K-BOW devices are interconnected by an Ethernet network using fibre optical connections. Within the network, the master C-hub is defined as the host, the other C-hubs, the E-hubs and RUs are defined as slaves.
The default IP address of the master C-hub is **10.7.3.200**[1)], the IP addresses of the slaves are assigned by the master automatically, based on the network topology.

The K-BOW devices provide a web interface (web GUI) provided by the C-hub. The web GUI can be accessed using the web browser of a notebook. In the following, it is described how to establish the connection between device and notebook.

[1)] The IP address of the master can be modified; for details, see **Device ID addr** in 8.2.7, p. 40.

4.3 Accessing the Web GUI Using Ethernet via C-Hub

1. On the notebook, go to **Control Panel** ▸ **Network Connections** ▸ **Local Area Connection** ▸ **Properties** ▸ **Internet Protocol (TCP/IP) Properties** ▸ **General**.
2. Input the TCP/IP properties as follows (Fig. 1):
   – **IP address** ①: **10.7.3.1** to **10.7.3.254** (except for **10.7.3.200**!)
   – **Subnet mask** ②: **255.0.0.0**
   – **Default gateway** ③: **10.7.3.200** (= IP address of master C-hub)
3. Connect the notebook to the RJ45 port **Local Control** located at the front panel of the master C-hub. Use a network cable.
4. Go to **Network Connection Details** and check if the connection was established successfully.
5. Open the browser and enter **10.7.3.200** (default gateway address) into the address bar ④; see example in Fig. 2.
   ⇨ The web GUI is displayed showing the homepage (**Settings** ▸ **DAS Topo**) of the master C-hub (Fig. 7, p. 19).

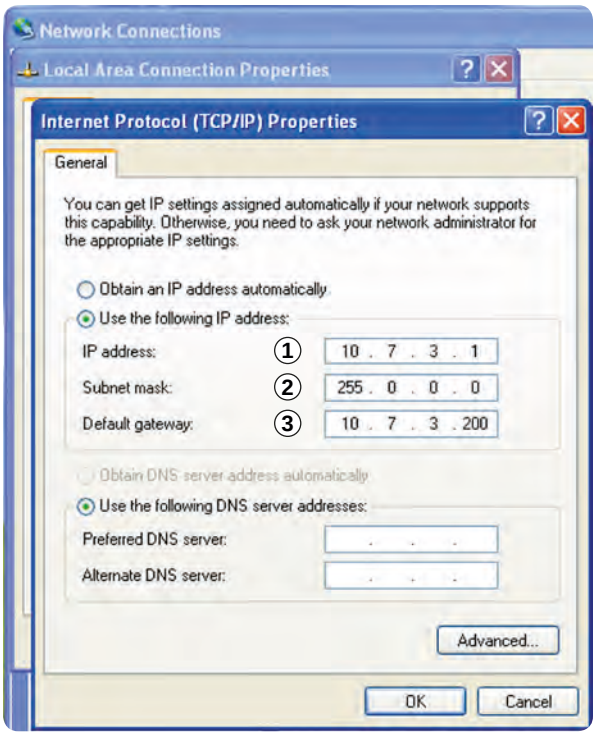

Fig. 1: Set TCP/IP properties master

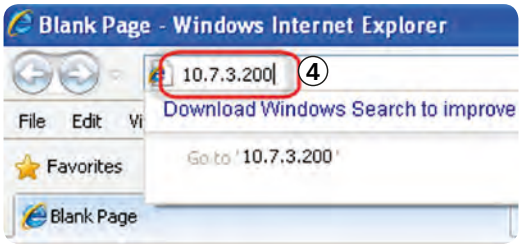

Fig. 2: Browser address bar

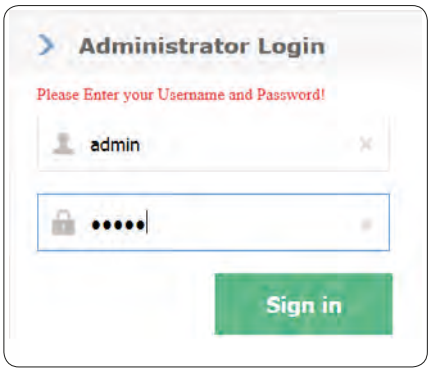

Fig. 3: Login dialogue

4.4 Accessing the Web GUI Using Ethernet via Slave Hubs/RUs

1. On the notebook, go to **Control Panel** ▸ **Network Connections** ▸ **Local Area Connection** ▸ **Properties** ▸ **Internet Protocol (TCP/IP) Properties** ▸ **General**.
2. Press the radio button **Obtain an IP address automatically** ① (Fig. 4).
3. Press the radio button **Obtain DNS server address automatically** ② (Fig. 4).
4. Press **OK** to confirm and to close the current window.
5. Press **OK** to confirm and to close the current window.
   ⇨ The **Local Area Connection Properties** window shows up.
6. Connect the notebook to the RJ45 port **Local Control** (front panel of slave C-/E-hub) or **Debug** (connector side of HPRU), using a network cable.
7. Wait a few seconds. Then, in the **Local Area Connection Properties** window, press **Details**.
   ⇨ The **Network Connection Details** window shows up.
8. Check if the connection was established successfully and note the gateway address ③ (Fig. 5).
9. Open the browser and enter the gateway address ③ into the address bar.
   ⇨ The web GUI is displayed showing the homepage (**Settings** ▸ **DAS Topo**) of the device the notebook is connected to.

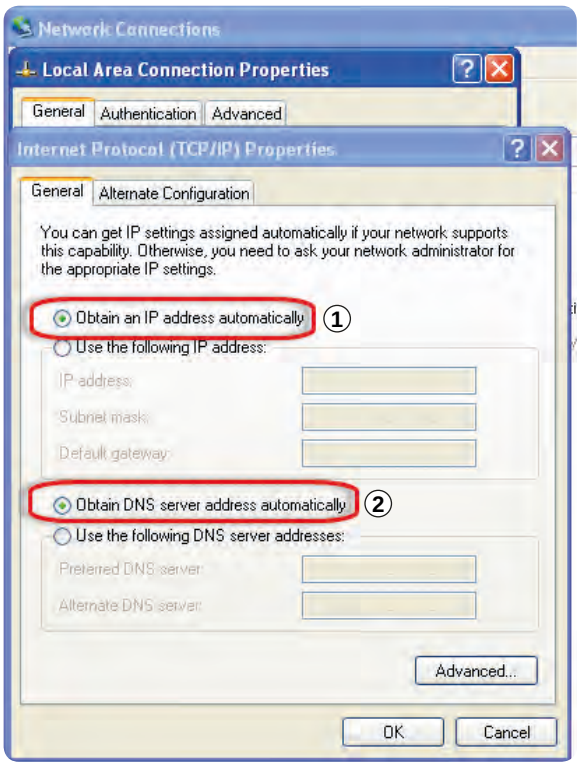

Fig. 4: Set TCP/IP properties slaves

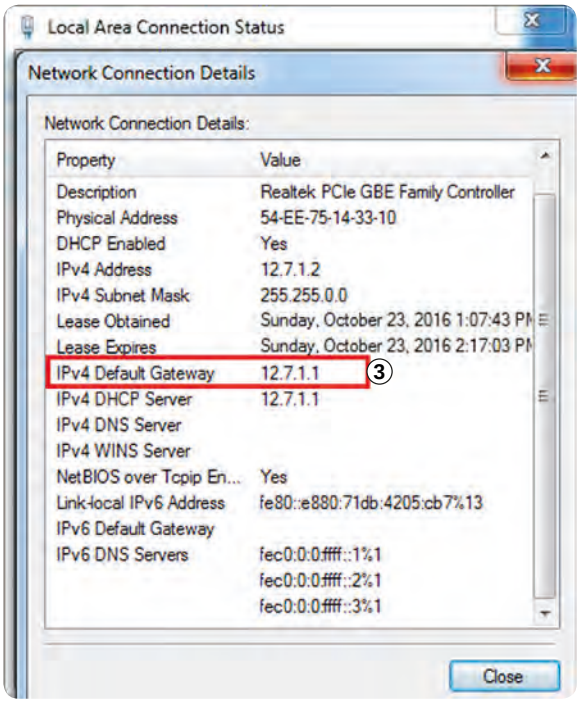

Fig. 5: Check TCP/IP properties slaves

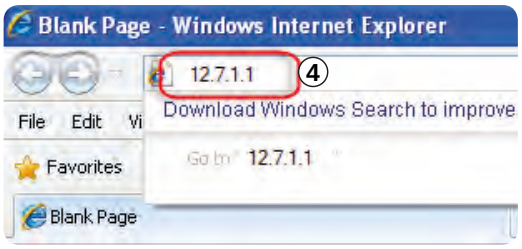

Fig. 6: Browser address bar

4.5 Accessing the Web GUI using WLAN

4.6 Structure of the Web GUI

The structure of the Web GUI is very extensive and is therefore separately described in Section *Structure of the Web GUI*, p. 32.

5 Setting up the C-Hub

Topics

Check the Modules' Connection Status, p. 19
Set the Device Identification, p. 20
Set the SNMP and FTP Parameters, p. 21
Update the K-BOW System Software, p. 21
Configure the Band, p. 23
Configure the Input Power, p. 24
Configure the Band Gain, p. 26
Configure the Alarm, p. 27

Related topics

Structure of the Web GUI, p. 32
Use Cases, p. 59

5.1 Check the Modules' Connection Status

1. Open the web GUI as described under 4.3, p. 15 or 4.4, p. 17.
2. Check the topology if all devices in the system are connected (C-/E-hubs and HPRUs); see example in Fig. 7.
3. When the login dialogue shows up, enter the default user name (***admin***) and password (***admin***); see Fig. 3.[1)]

[1)] The default user name and password can be modified as described under ... .

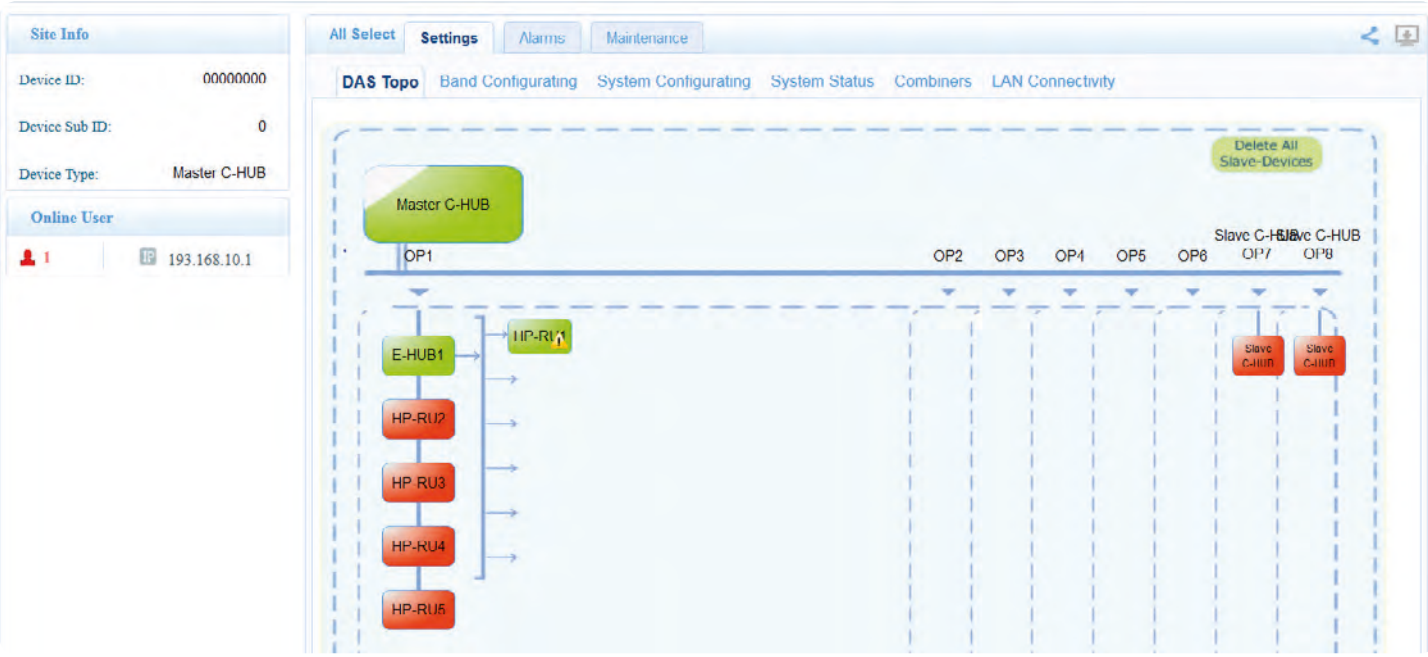

Fig. 7: Web GUI of master C-hub

5.2 Set the Device Identification

1. Go to Settings ▸ LAN Connectivity; see example in Fig. 8.
2. Select Device Location ①ⓐ and enter the correct location in field ①ⓑ.
3.
4. Press Set to confirm.

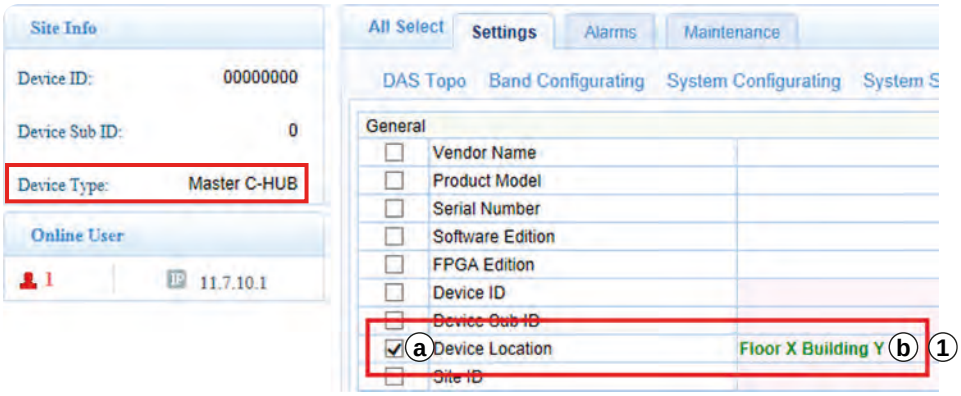

Fig. 8: Settings of the LAN connection (C-hub)

5.3 Set the SNMP and FTP Parameters

1. Open the master C-hubs web GUI as described under 4.3, p. 15/4.4, p. 21.
2. Go to **Settings** ▸ **LAN Connectivity**.
3. Set **Protocol Select** to **SNMP** if the network management system (NMS) supports the SNMP protocol (①ⓐ in Fig. 9).
4. Set the SNMP parameters ②.
5. Set the C-hub parameters ③.

5.4 Update the K-BOW System Software

If required, the K-BOW system software can be updated locally or via FTP.
For details, see the document *Operation and Maintenance (K-BOW Platform 2)*

5.4.1 Update via FTP

If FTP remote software upgrades shall be supported:

✓

1. Set the FTP server parameters[1)] (④ in Fig. 10).
2. Select the **FTP File Transfer Control** checkbox ⑤ⓐ.
3. Select **Start Upgrade** ⑤ⓑ and press **Set** ⑥.
   ⇨ The update via FTP is performed.

1) The FTP server parameters are located on the same tab as the SNMP/C-hub parameters.

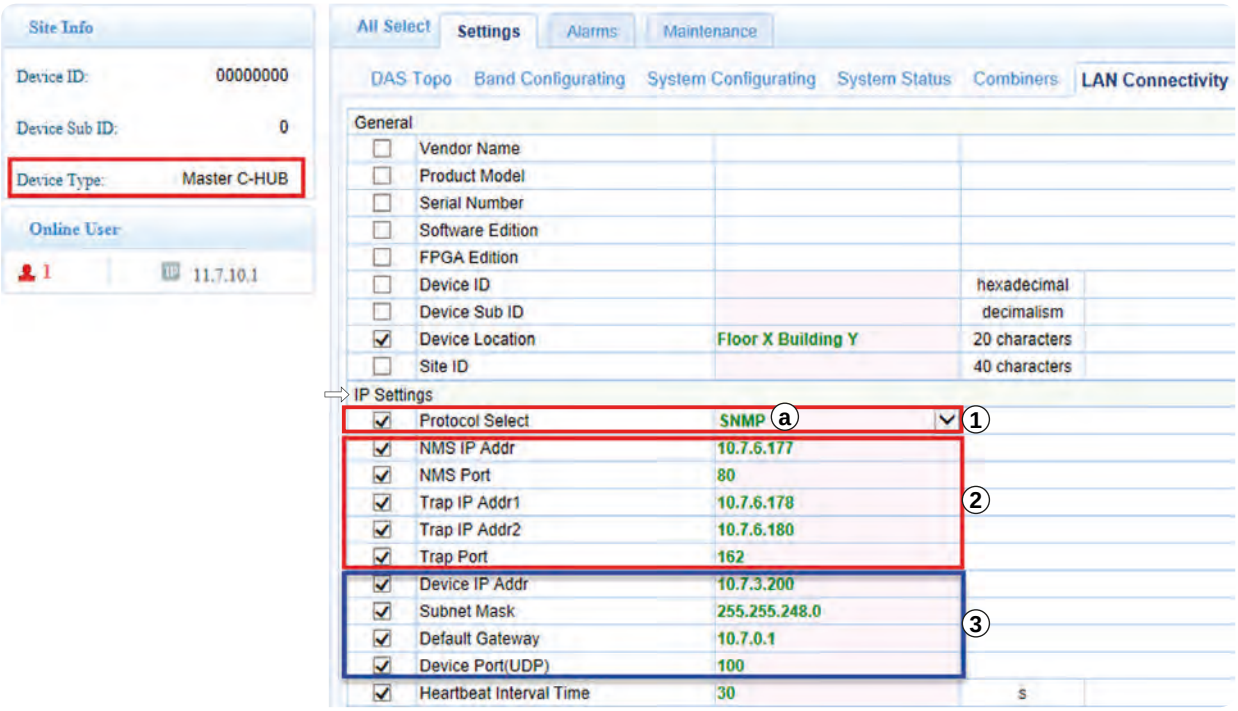

Fig. 9: SNMP parameters (C-hub)

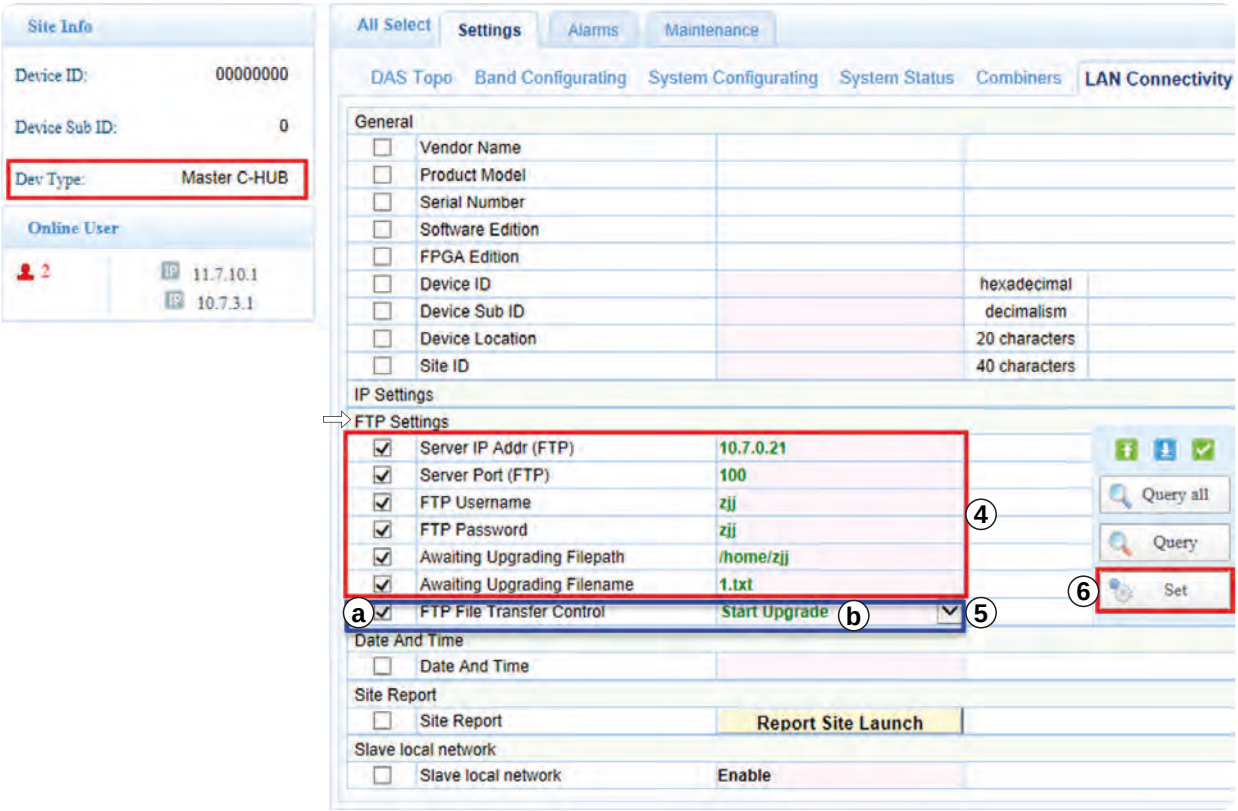

Fig. 10: FTP parameters (C-hub)

5.5 Configure the Band

According to the different base station operating frequency bands for each operator, the following must be set:

- The active RF modules for the C-hub and the active RF modules for the RUs with the corresponding frequency band
- The frequency band of carrier bundles

The limits of the uplink and downlink operating frequency bands correspond to the effective RF range of the selected RF modules; see Fig. 11.

1. Open the master C-hubs web GUI as described under 4.3, p. 15/4.4, p. 23.
2. Go to **Settings** ▸ **Band Configuration**.
3.

   Tip Make sure that the maximum bandwidth per carrier bundle is less than 40 MHz and the maximum bandwidth for all operators is less than 280 MHz.

   For the channels 1 to 4, set the uplink and downlink centre frequencies and the bandwidth for the carrier bundles (② in Fig. 11).
4. Press **Set** ③ to confirm the changes.
5. Ensure the value of CH1~4 info is valid.
6. Set **AU CH Info Update** to **Update** ④.

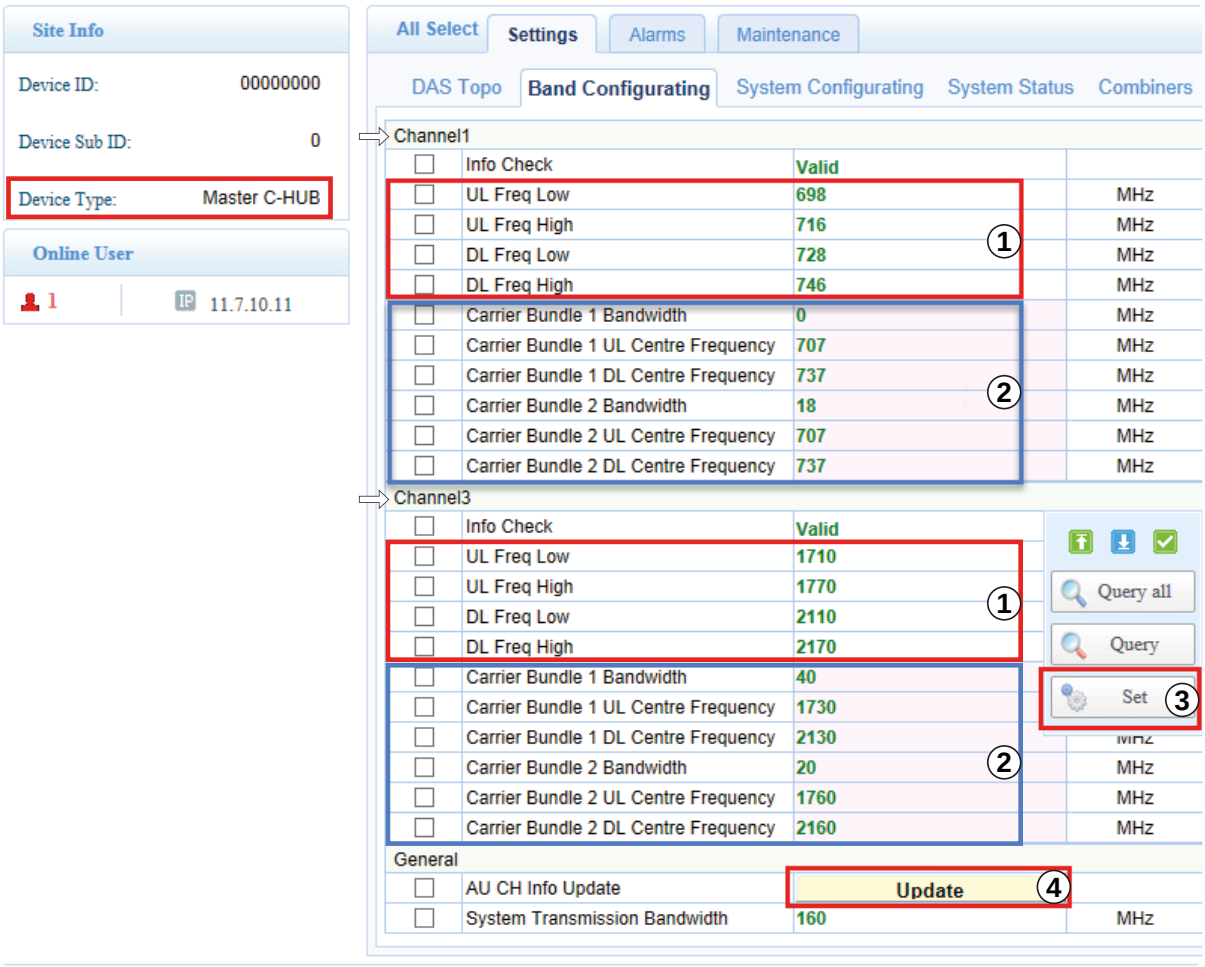

Fig. 11: Define carrier bundles

5.6 Configure the Input Power

The downlink input power of the C-hub is as follows:

- Nominal: 0 dBm
- Maximum: 15 dBm.

Therefore, before accessing the RF signals, the signal power must be estimated. The downlink input power must be monitored with a spectrum analyser or read the downlink input power value from the combiners on the web GUI in order to set the downlink input power within the appropriate range.

1. Open the master C-hubs web GUI as described under 4.3, p. 15/4.4, p. 24.
2. Go to Settings ▸ Combiners.
3. Set the attenuation control mode to Manual or Auto[1)] (①ⓐ in Fig. 12).
4. Scroll to display the parameters of a C-hub channel to be configured; see Fig. 12 showing the example of Channel1.
5. Check the channel's band frequency ②.
6. Check the channel's input power per port ③.

7. *Only if, in* **Manual** *mode (step 3), the maximum input power exceeded 0 dBm*:
   Set the attenuation per port (④) to reduce the input power to 0 dBm.[2) 3)]
8. Set the channel's power offset value per port (⑤).
9. Enter the operator name per module and port (⑥).

1) **Auto** is only supported i LTE is switched on in

2) *Example*:
   If the input power value of **Channel1** / **Port 1 Input Power Value** (in ③) is ***3.499*** dBm, then enter ***3.50*** dB attenuation in **Channel1** / **Port 1 Attenuation Value** (in ④).
   Now the input power value of **Channel1** / **Port 1 Input Power Value** (in ③) should be ***0.0*** dBm.

3) Skip step 7 if the **Auto** mode was selected in step 3.

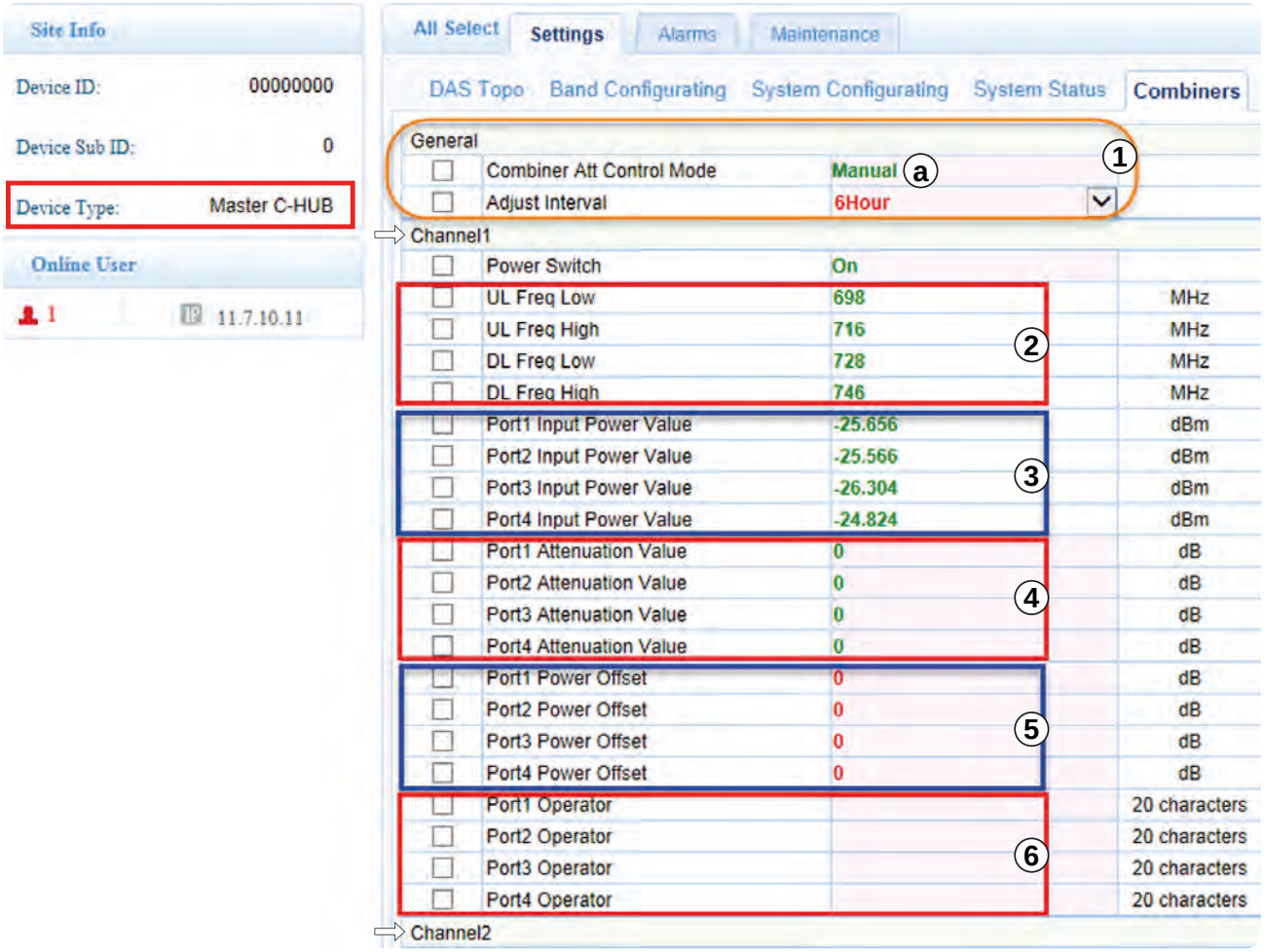

Fig. 12: Input power parameters of the C-hub channels

5.7 Configure the Band Gain

1. Open the master C-hubs web GUI as described under 4.3, p. 15/4.4, p. 26.
2. Go to **Settings** ▸ **System Configurating**.
3. Set the **UL Gain Automatically Follow** mode ***On*** or ***Off*** (②ⓐ in Fig. 13).
4. *Only if **UL Gain Automatically Follow** mode is set to **On**:*
   a. Configure the **UL/DL Gain Imbalance** for each C-hub channel (③).
   b. Configure the DL attenuation for each C-hub channel ().
      ⇨ The UL attenuation will be set automatically.
   c. Press **Set** ④ to confirm the changes. *Only if **UL Gain Automatically Follow** mode is set to **Off**:*
   a. Do not modify the **UL/DL Gain Imbalance** (③).
   b. Configure the DL and UL attenuation for each C-hub channel ().
   c. Press **Set** ④ to confirm the changes.

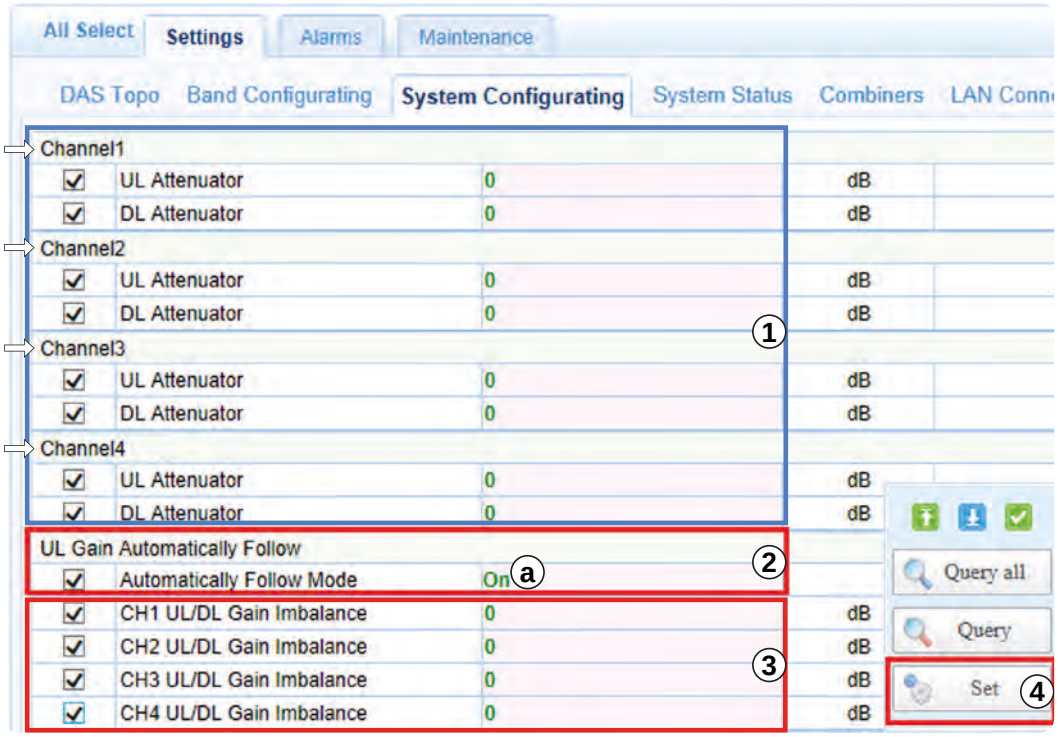

Fig. 13: Band gain parameters (C-hub)

5.8 Configure the Alarm

5.8.1 Configure the Device Alarms

Per default, all alarms are disabled.

Tips To avoid false alarms, do not enable alarms of unconnected optical transceivers and channels.

1. Open the master C-hubs web GUI as described under 4.3, p. 15/4.4, p. 27.
2. Go to Alarms ▸ Device Alarms.
3. Set the severity of the alarms as required; see ①ⓒ (Fig. 14) and Fig. 15.[1)]
4. Press Set ③ to confirm the changes.

[1)] Power Interruption Alarm and Battery Failure Alarm are available only if a battery is installed.

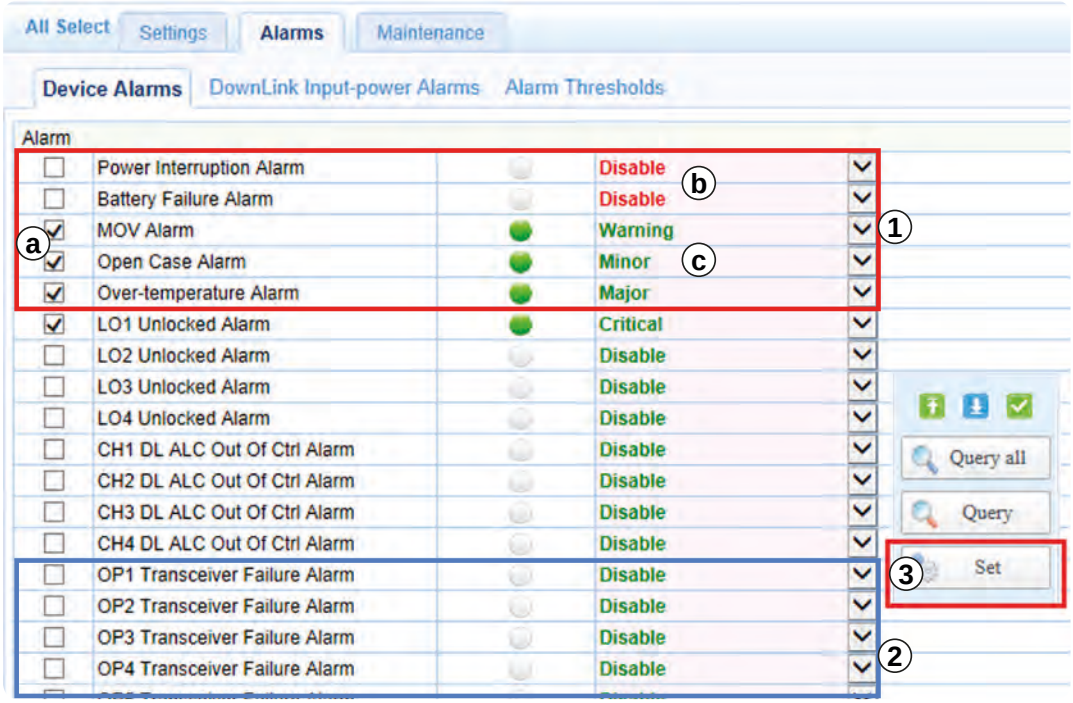

Fig. 14: Device alarm parameters (C-hub)

Fig. 15: Alarm levels (C-hub)

5.8.2 Configure and Check Alarm Thresholds

1. Open the master C-hubs web GUI as described under 4.3, p. 15/4.4, p. 28.
2. Go to **Alarms** ▸ **Alarm Thresholds**.
3. Enter the threshold of the alarms as required; see ①ⓑ (Fig. 16).
4. Press **Set** ② to confirm the changes.
5. Wait at least 3 minutes.[1] Then press **Query all** ③ to check if an alarm was triggered.

[1] The system polls the status of all alarms every 3 minutes.

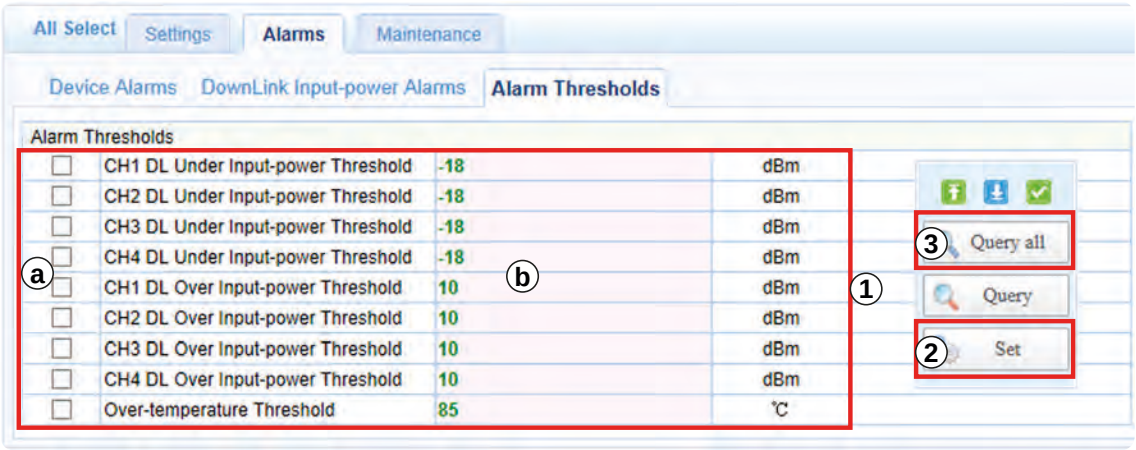

Fig. 16: Alarm threshold parameters (C-hub)

6 Setting up the E-Hub

Topics

Query the Status of the E-Hubs, p. 29
Configure the Alarms, p. 29

Related topics

Structure of the Web GUI, p. 32
Use Cases, p. 59

6.1 Query the Status of the E-Hubs

► Proceed as described under 5.1, p. 19 to query the status of the E-hubs.

6.2 Configure the Alarms

1. Open the E-hubs' web-GUI as described under 4.4, p. 17.
2. Check and configure the alarms of the E-hubs. For this purpose, proceed as described for the C-hub under 5.8, p. 27 .

7 Setting up the Remote Units

Topics

Query the Status of the Remote Units, p. 30
Configure the Band Gain, p. 30
Configure the Alarms, p. 31

Related topics

Structure of the Web GUI, p. 32
Use Cases, p. 59

7.1 Query the Status of the Remote Units

► Proceed as described under 5.1, p. 19 to query the status of the remote units.

7.2 Configure the Band Gain

1. Open the remote units' web-GUI as described under 4.4, p. 17.
2. Go to **Settings** ▸ **System Configurating** (Fig. 17).
3. Configure the attenuation[1)] per HPRU channel and per C-hub channel which is mapped to the HPRU.
4. Press **Set** to confirm the changes.

[1)] The UL attenuation cannot be set if **UL Gain Auto** mode is set ***On***; see 5.7, p. 26.

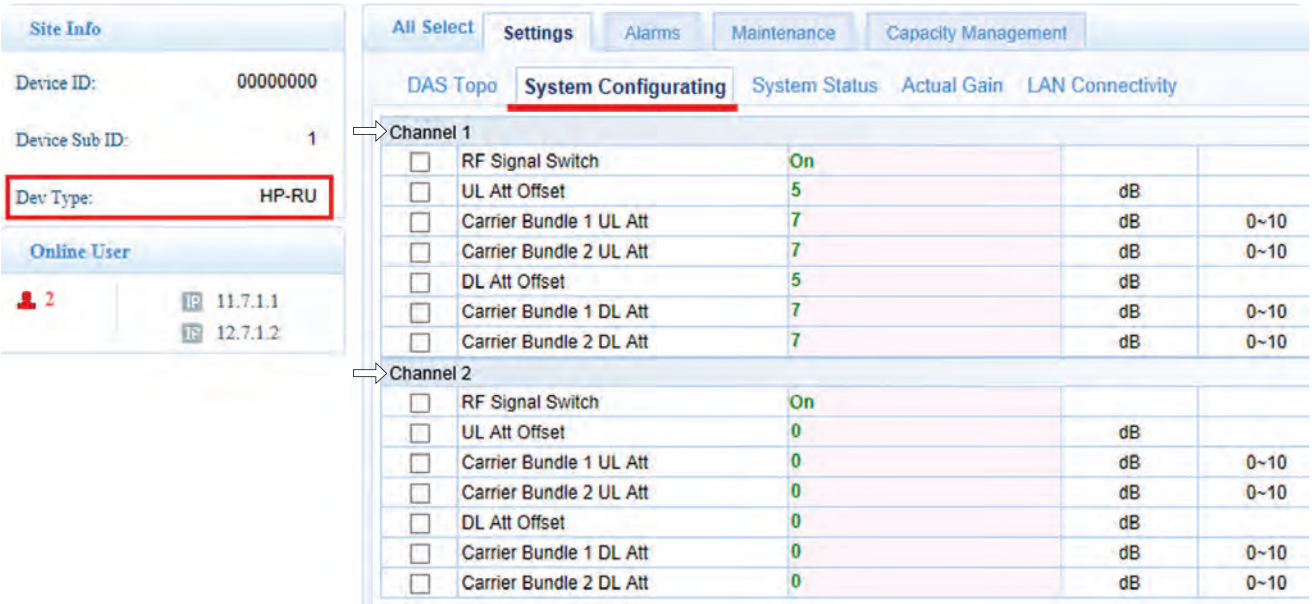

Fig. 17: Band gain parameters (HPRUs)

7.3 Configure the Alarms

1. Open the remote units' web-GUI as described under 4.4, p. 17.
2. Check and configure the alarms of the remote units. For this purpose, proceed as described for the C-hub under 5.8, p. 27 .

8 Structure of the Web GUI

Topics

Starting the Web GUI – Overview, p. 33
Master C-Hub, p. 33
Master/Slave E-Hub, p. 45
HPRU, p. 49

8.1 Starting the Web GUI – Overview

When the web GUI was opened, it always shows the menu item **Settings** ▸ **DAS Topo**(logy) (② in Fig. 18). Else, the following elements are always visible:

- Main menu ① and parameter select button ⑥
- Control menu ③ (movable)
- Device ID indication ⑤
- Indication of currently connected users ④

In the following sections, the parameters on the web GUI pages are described in detail.

Tips

- On all web GUI pages, only parameters displayed on pink background can be modified. The other parameters are displayed only.
  ► If required, push the button ③ⓒ to refresh the display.
- The abbreviations used in the following sections are explained in the *Glossary*, p. 57.
- In Section *8*, *device* always means the device indicated in ⑤ and whose GUI is currently displayed.

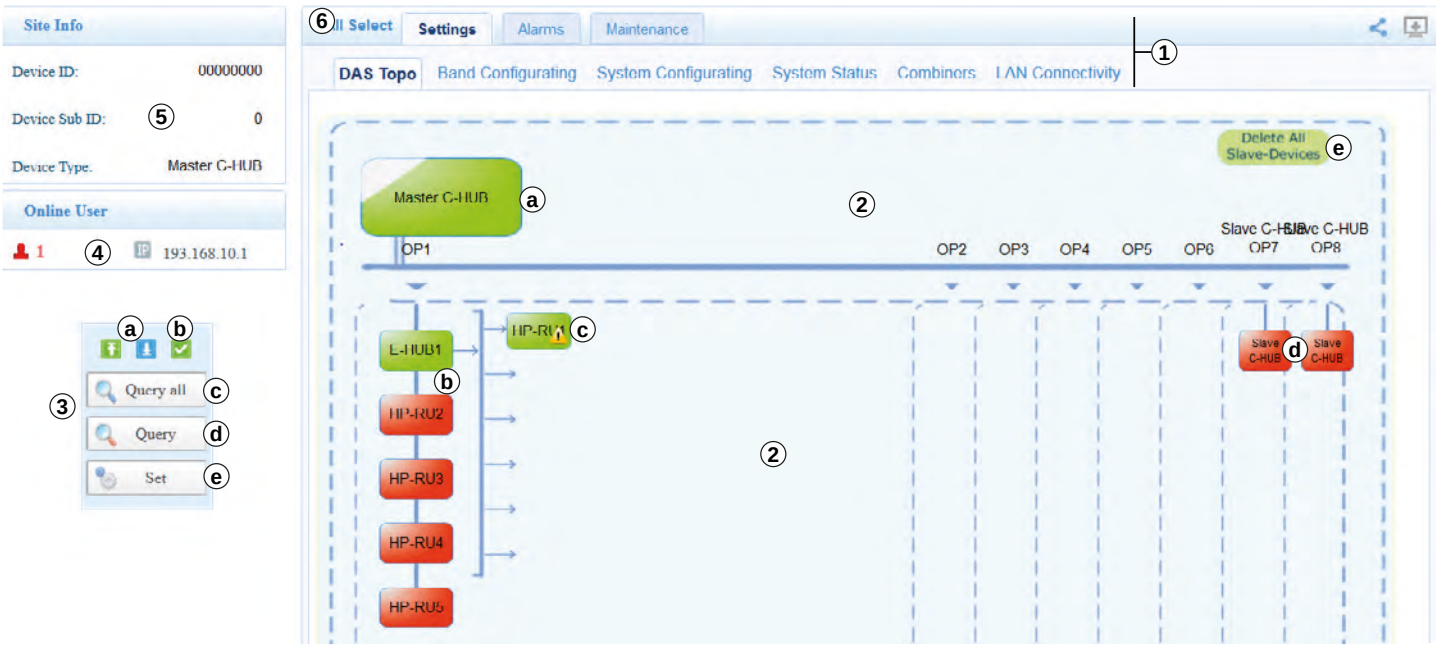

Fig. 18: Web GUI of master C-hub (homepage)

①	Main menu for selecting the GUI pages
②	Visualisation of the system topology: • The device symbols indicate the device state as follows: <table><tr><td> </td><td>green</td><td>Device is connected and works without errors</td></tr><tr><td> </td><td>green + warning symbol</td><td>Device is connected and has errors</td></tr><tr><td> </td><td>red</td><td>Device is not connected</td></tr></table>• Double clicking a device symbol (ⓐ ... ⓓ) opens the devices' GUI. • The button ⓔ deletes all slave devices from the configuration
③	Control menu for • navigating on the GUI pages (ⓐ), • selecting all adjustable parameters on a page (ⓑ), • refreshing the displayed data (ⓒ + ⓓ), • confirming modifications (ⓔ).
④	List of users currently connected to the system
⑤	ID of the device whose GUI is currently displayed
⑥	Button for selecting all adjustable parameters on a page

Related topics

Open the web GUI: *Accessing the Web GUI Using Ethernet via C-Hub*, p. 15 or *Accessing the Web GUI Using Ethernet via Slave Hubs/ RUs*, p. 17

8.2 Master C-Hub

Using tables, this section describes the parameters available on the web GUI of the master C-hub.
The right column *Type* indicates if the parameter is indicated, if it can be modified or both. Also a button to trigger an action can be provided. This is marked with R, W, RW and B as follows:

R (read only):	The parameter value is indicated, only. *Example*: current **Device Temperature** on **Settings** ▸ **System Status**
W (write only):	The parameter value can be modified, only. The current value of the parameter is *not* indicated. *Example*: **Overtemperature Threshold** on **Alarms** ▸ **Alarm Thresholds**

RW (read/ write):	The parameter value is indicated. In addition, the parameter behaviour can be modified. As for alarm states, these are indicated using grey, green and red LEDs; see Section *Alarm States* below. As for the alarm severity, the following levels are available: ***Minor***, ***Major***, ***Warning***, ***Critical***. *Example*: Read: Overtemperature Alarm state Write: severity of the Overtemperature Alarm on Alarms ▸ Device Alarms
B	The button triggers an action. For some buttons, the action can be selected from a drop-down list. *Examples*: Hardware Reset on Maintenance ▸ Engineering Alarm Initialization on Maintenance ▸ Engineering

Alarm States

(grey):	The alarm is disabled or the alarm state was not yet queried.
(green):	Alarm state = *ok*
(red):	Alarm state = *error*

8.2.1 Structure Overview

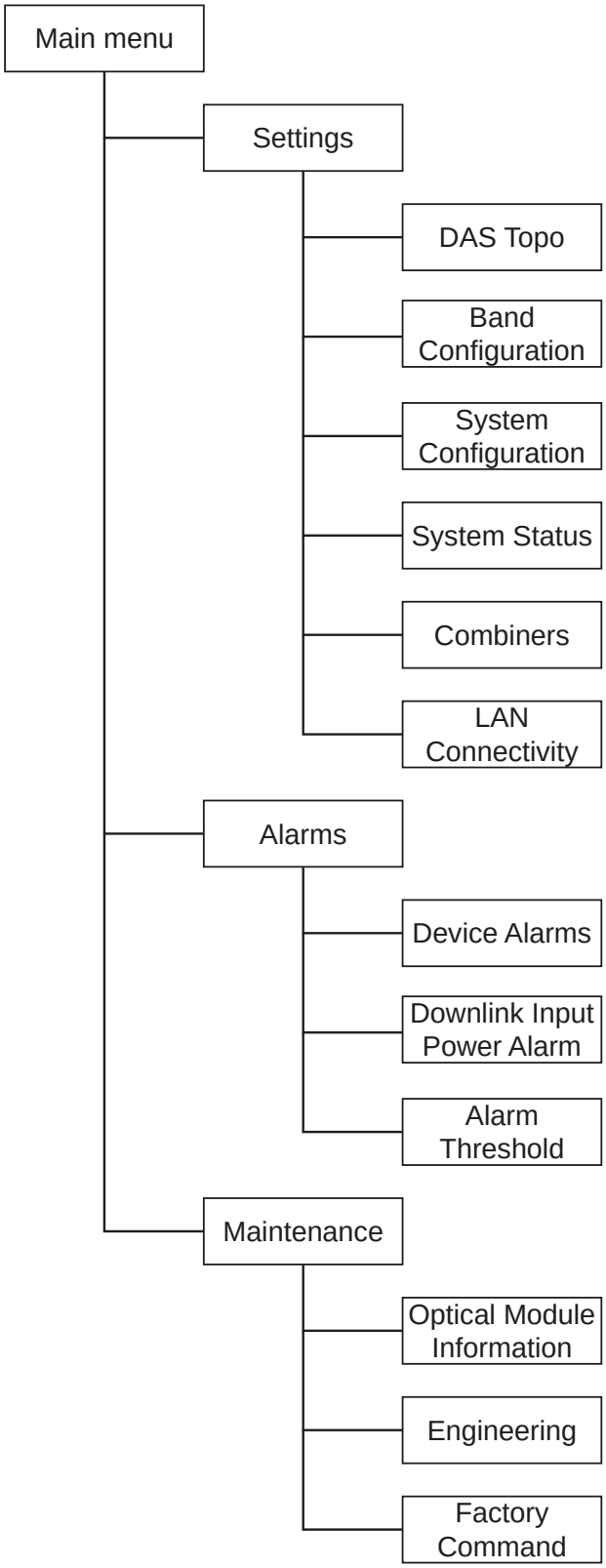

Parameters are described in section ...

DAS Topo	**8.2.2, p. 35**
Band Configuration	**8.2.3, p. 36**
System Configuration	**8.2.4, p. 37**
System Status	**8.2.5, p. 38**
Combiners	**8.2.6, p. 39**
LAN Connectivity	**8.2.7, p. 40**
Device Alarms	**8.2.8, p. 41**
Downlink Input Power Alarm	**8.2.9, p. 42**
Alarm Threshold	**8.2.10, p. 42**
Optical Module Information	**8.2.11, p. 42**
Engineering	**8.2.12, p. 43**
Factory Command	**8.2.13, p. 44**

8.2.2 Settings > DAS Topo

The DAS Topo tab is described in Section 7.1, p. 33.

8.2.3 Settings > Band Configuration

Parameter	Description	Type
Channel 1		
Info check		R
UL freq low, UL freq high	Uplink (UL) limit frequencies	R
DL freq low, DL freq high	Downlink (DL) limit frequencies	R
Carrier bundle *x* bandwidth	Bandwidth of carrier bundle (CB) *x*	W
Carrier bundle *x* UL centre frequency	Centre frequency of CB *x* UL	W
Carrier bundle *x* DL centre frequency	Centre frequency of CB *x* DL	W
Channel 2 ... 4	See *Channel 1*	
General		
Band configurating update		B
System transmission bandwidth		R

Tab. 2: Band configuration parameters C-hub

8.2.4 Settings > System Configuration

Parameter	Description	Type
Channel 1		
UL attenuator	Attenuation of the UL output signal of channel 1 to achieve a signal level of 0 dB [1)]	W
DL attenuator	Attenuation of the DL output signal of channel 1 to achieve a signal level of 0 dB [1)]	W
Channel 1 ... 4	See Channel 1	
UL gain automatically follow		
Automatically follow mode	*Automatically follow mode* On/Off	W
CH *x* UL/DL gain imbalance	Imbalance between the UL/DL gain [2)]	W
System delay		
Delay adjustment type (DAT)	Manual — Delay is adjusted manually using the parameters below Auto — Delay is automatically adjusted	W
Maximum delay measurement value	(only if DAT is set to Manual)	R
Maximum delay adjustment value	(only if DAT is set to Manual)	R
Manual delay confirm	Confirms the setting of Delay adjustment type	B
TDD mode		
DL carrier frequency (main)		W
DL carrier frequency (minor)		W
UL-DL configuration		W
Special subframe configuration		W
CP type		W
Sync indication		R

Tab. 3: System configuration parameters C-hub

1) Typically, the value is set to *0* in order to obtain the maximum output power.

2) Typically, the value is set to *0* in order to obtain the best performance.

8.2.5 Settings > System Status

Parameter	Description	Type
Channel 1		
CB1 baseband input power		R
CB2 baseband input power		R
DL baseband input power		R
UL baseband input power		R
Channel 2 ... 4	See Channel 1	
Master C-hub carrier configuration information		
CH1 CB0 – CB1 (BW/UL/DL)		R
CH2 CB0 – CB1 (BW/UL/DL)		R
CH3 CB0 – CB1 (BW/UL/DL)		R
CH4 CB0 – CB1 (BW/UL/DL)		R
Slave C-hub *x* carrier configuration information	See *Master C-hub carrier configuration information*	
General		
Device temperature	Temperature of the devices'	R
Device routing address		R

Tab. 4: System status parameters C-hub

8.2.6 Settings > Combiners

Parameter	Description	Type
General		
Combiner att control mode	*Manual*: The attenuation of the input power must be set manually using the parameters Port *x* attenuation value below. *Auto*: The attenuation is set automatically.	W
Adjust interval	Period of the input power level being below 0 dB, after which the attenuation will be raised (*6*/*12*/*24 hours*).[1)] *24 hours* is recommended.	W
Channel 1		
Power switch		W
UL freq low		R
UL freq high		R
DL freq low		R
DL freq high		R
Port *x* input-power value	Input power level	R
Port *x* attenuation value	Attenuates the input-power to achieve Port *x* input-power value to be 0 dBm.	W
Port *x* power offset	Additional attenuation in case of rising composite power due to multiple carriers input.	W
Port *x* operator	Operator information, e.g. name	W
Channel 2 ... 4	See *Channel 1*	

Tab. 5: Combiner parameters C-hub

1) Example: The input power is less than maximum during a period of 24 hours, then the attenuation decreases (2 dB).

2) Example: A power offset of 3 dB is recommended if an input of 2 carriers exists.

8.2.7 Settings > LAN Connectivity

Parameter	Description	Type
General		
Vendor name	Name of the company running the system; the name is fixed in the device's firmware	R
Product model	Product name; fixed in the device's firmware	R
Serial number	Serial number of the device	R
Software edition	Edition of the software running on the device	R
FPGA edition	Edition of the firmware running on the device	R
Device ID	Customer specific device ID	W
Device sub ID	Customer specific device sub-ID	W
Device location	Installation location of the device	W
Site ID	Site ID	W
IP settings		
Protocol select		W
NMS IP addr		W
NMS port		W
Trap IP addr1	Destination IP address used for SNMP traps	W
Trap IP addr2	ditto	W
Trap port	Destination IP port used for SNMP traps	W
Device ID addr	IP address of the master C-hub	W
Subnet mask	Subnet mask of the master C-hub	W
Default gateway	Default gateway of the master C-hub	W
Device port (UDP)	Device port of the master C-hub	W
Heartbeat interval time		W
Date and time		
Date and time	Date and time of the C-hub's internal clock	W
Site report		
Site report		B
Slave local network		
Slave local network		W

Tab. 6: LAN connectivity parameters C-hub

8.2.8 Alarms > Device Alarms

Parameter	Description	Type
Alarm		
Power interruption alarm		RW
Battery failure alarm		RW
MOV alarm		RW
Open case alarm	The housing of the device is open.	RW
Overtemperature alarm	The of the device has exceeded the Overtemperature threshold.	RW
LO *x* unlocked alarm		RW
CH *x* DL ALC out-of-ctrl alarm		RW
OP *x* transceiver failure alarm		RW
External alarm *x*		RW

Tab. 7: Device alarm parameters C-hub

8.2.9 Alarms > Downlink Input Power Alarms

Parameter	Description	Type
Channel 1		
Port *x* under input-power alarm		RW
Port *x* over input-power alarm		RW
Channel 2 ... 4	See *Channel 1*	

Tab. 8: Downlink input power alarm parameters C-hub

8.2.10 Alarms > Alarm Thresholds

Parameter	Description	Type
Alarm thresholds		
CH *x* under output-power threshold	Output-power threshold below which an alarm is triggered.	W
CH *x* over input-power threshold	Input-power threshold above which an alarm is triggered.	W
Overtemperature threshold	Overtemperature threshold above which an alarm is triggered.	W

Tab. 9: Alarm threshold parameters C-hub

8.2.11 Maintenance > Optical Module Information

Parameter	Description	Type
Port 1		
Tx power		R
Rx power		R
Tx wavelength		R
Port 2 ... 8	See Port 1	

Tab. 10: Optical module information parameters C-hub

8.2.12 Maintenance > Engineering

Parameter	Description	Type
Engineering info		
Data update time		R
ARM CRC check		R
FPGA CRC check		R
Current C-hub software filename		R
C-hub CRC check		R
Current E-hub software filename		R
E-hub CRC check		R
Current HPRU software filename		R
HPRU CRC check		R
Digital panel information		
Maximum delay		R
OP info		
OP *x* CPRI sync alarm		R
OP *x* LOS alarm		R
ALC indication info		
CH *x* DL ALC working alarm		R
Advanced commands		
Master/slave C-hub		W
Backup battery switch		W
Battery contain		W
Hardware reset		B
Software reset		B
Alarm initialization		B
Alarm mode select		B
Combiner att control (test)		
Adjust interval		W

Tab. 11: Engineering parameters C-hub

8.2.13 Maintenance > Factory Command

Parameter	Description	Type
Factory parameters		
Factory mode		B
Factory mode password		B

Tab. 12: Factory command parameters C-hub

8.3 Master/Slave E-Hub

8.3.1 Structure Overview

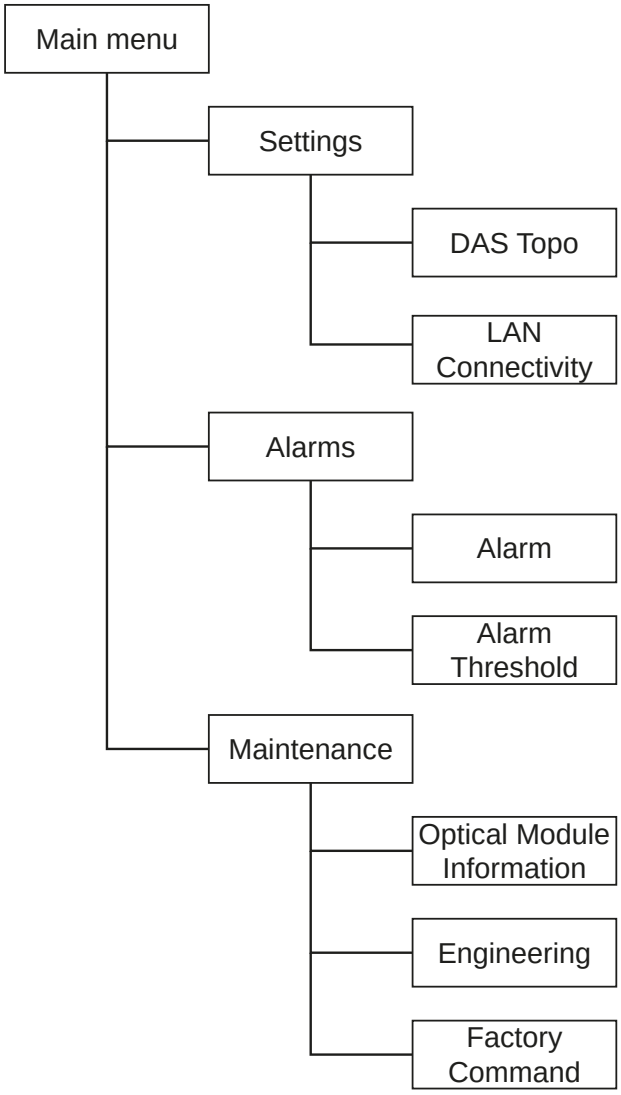

Parameters are described in section ...

8.3.2, p. 46

8.3.3, p. 46

8.3.4, p. 46

8.3.5, p. 47

8.3.6, p. 47

8.3.7, p. 47

8.3.8, p. 48

8.3.2 Settings > DAS Topo

The DAS Topo tab is described in Section 7.1, p. 33.

8.3.3 Settings > LAN Connectivity

Parameter	Description	Type
General		
Vendor name	See description under 8.2.7, p. 40.	–
Product model	ditto	–
Serial number	ditto	–
Software edition	ditto	–
FPGA edition	ditto	–
Device ID	ditto	–
Device sub ID	ditto	–
Device location	ditto	–
Site ID	ditto	–
Device temperature	See description under 8.2.7, p. 40.	–
Device routing address	ditto	–
Date and time	See description under 8.2.7, p. 40.	–
Site report	ditto	–

Tab. 13: LAN connectivity parameters E-hub

8.3.4 Alarms > Alarm

Parameter	Description	Type
Alarm		
Power interruption alarm	See description under 8.2.8, p. 41.	–
MOV alarm	ditto	–
Open case alarm	ditto	–
Overtemperature alarm	ditto	–
OP *x* transceiver failure alarm	ditto	–
OP slave transceiver failure alarm		–
OP master transceiver failure alarm		–
Link alarm		–

Tab. 14: Alarm parameters E-hub

8.3.5 Alarms > Alarm Thresholds

Parameter	Description	Type
Alarm thresholds		
Overtemperature threshold	See description under 8.2.10, p. 42.	–

Tab. 15: Alarm threshold parameters E-hub

8.3.6 Maintenance > Optical Module Information

Parameter	Description	Type
Port 1		
Tx power	See description under 8.2.11, p. 42.	–
Rx power	ditto	–
Tx wavelength	ditto	–
Port 2 ... 8	See Port 1	
Slave Port	See Port 1	
Master Port	See Port 1	

Tab. 16: Optical module information parameters E-hub

8.3.7 Maintenance > Engineering

Parameter	Description	Type
Engineering info		
Data update time	See description under 8.2.12, p. 43.	–
ARM CRC check	ditto	–
FPGA CRC check	ditto	–
E-hub CRC check	ditto	–
OP info		
OP *x* CPRI sync alarm	ditto	–
OP slave CPRI sync alarm		
OP master CPRI sync alarm		
OP *x* LOS alarm	ditto	–
OP slave LOS alarm		
OP master LOS alarm		
Advanced commands		

Hardware reset	ditto	–
Software reset	ditto	–
Alarm initialization	ditto	–
Alarm mode select	ditto	–

Tab. 17: Engineering parameters E-hub

8.3.8 Maintenance > Factory Command

Parameter	Description	Type
Factory parameters		
Factory mode	See description under 8.2.13, p. 44.	–
Factory mode password	ditto	–

Tab. 18: Factory command parameters E-hub

8.4 HPRU

8.4.1 Structure Overview

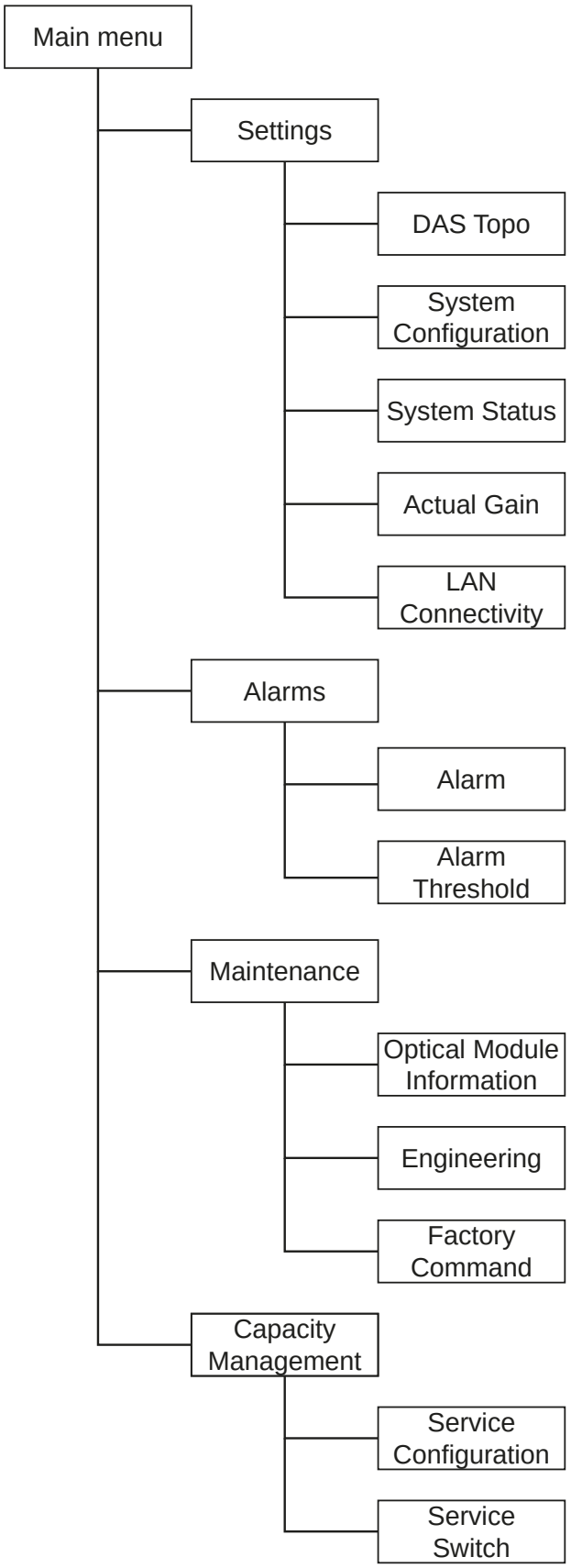

Parameters are described in section ...

8.4.2, p. 50

8.4.3, p. 50

8.4.4, p. 51

8.4.5, p. 51

8.4.6, p. 52

8.4.7, p. 53

8.4.8, p. 53

8.4.9, p. 54

8.4.10, p. 55

8.4.11, p. 55

8.4.2 Settings > DAS Topo

The DAS Topo tab is described in Section 7.1, p. 33.

8.4.3 Settings > System Configuration

Parameter	Description	Type
Channel 1		
RF signal switch	*On*: A RF signal is fed to the HPRU RF output. *Off* No signal is fed to the HPRU RF output.	W
Carrier bundle *x* switch		W
UL attenuator	See description under 8.2.4, p. 37.	–
Carrier bundle *x* UL att(enuator)	Attenuation of the UL output signal of channel 1/ carrier bundle x to achieve a signal level of 0 dB [1)]	W
DL attenuator	See description under 8.2.4, p. 37.	W
Carrier bundle *x* DL att(enuator)	Attenuation of the DL output signal of channel 1/ carrier bundle x to achieve a signal level of 0 dB [1)]	W
Channel 2	See Channel 1	

Tab. 19: System configuration parameters HPRU

1) Typically, the value is set to *0* in order to obtain the maximum output power.

8.4.4 Settings > System Status

Parameter	Description	Type
Channel 1		
UL frequ low		R
UL frequ high		R
DL frequ low		R
DL frequ high		R
UL baseband input power		R
DL baseband output power		R
UL input power		R
DL output power		R
VSWR		R
Channel 2	See Channel 1	
Channel map (HPRU C-hub)		
Channel map 1		R
Channel map 1		R
General		
Device temperature		R
Device routing address		R
Automatic follow mode		R

Tab. 20: System status parameters HPRU

8.4.5 Settings > Actual Gain

Parameter	Description	Type
Channel 1 actual gain		
Port 1		
C-hub AC CB1 UL		R
C-hub AC CB1 UL		R
C-hub AC CB1 DL		R
C-hub AC CB1 DL		R
Port 2 ... 4	See Port 1	
Channel 2 actual gain	See Channel 1 actual gain	

Tab. 21: Channel actual gain parameters HPRU

8.4.6 Settings > LAN Connectivity

Parameter	Description	Type
General		
Vendor name	See description under 8.2.7, p. 40.	–
Product model	ditto	–
Serial number	ditto	–
Software edition	ditto	–
FPGA edition	ditto	–
Device ID	ditto	–
Device sub ID	ditto	–
Device location	ditto	–
Site ID	ditto	–
Date and time		
Date and time	ditto	–
Site report		
Site report	ditto	–

Tab. 22: LAN connectivity parameters HPRU

8.4.7 Alarms > Alarm

Parameter	Description	Type
Alarm		
Power interruption alarm	See description under 8.2.8, p. 41.	–
MOV alarm	ditto	–
Open case alarm	ditto	–
Overtemperature alarm	ditto	–
LO *x* unlocked alarm	ditto	–
CH *x* UL ALC out-of-ctrl alarm		
CH *x* VSWR alarm		
OP slave transceiver-failure alarm		
OP master transceiver-failure alarm		
CH *x* DL under-output-power alarm		
CH *x* DL over-output-power alarm		
Link alarm		

Tab. 23: Alarm parameters HPRU

8.4.8 Alarms > Alarm Thresholds

Parameter	Description	Type
Alarm thresholds		
CH x DL under-output-power threshold	Output-power threshold below which an alarm is triggered.	W
CH *x* over-output-power threshold	Output-power threshold above which an alarm is triggered.	W
VSWR threshold	VSWR threshold above which an alarm is triggered. [1)]	
Overtemperature threshold	See description under 8.2.10, p. 42.	W

Tab. 24: Alarm threshold parameters HPRU

[1)] Typically, the value is set to 2.5.

8.4.9 Maintenance > Optical Module Information

Parameter	Description	Type
Slave port		
Tx power	See description under 8.2.11, p. 42.	–
Rx power	ditto	–
Tx wavelength	ditto	–
Master port		
Tx power	ditto	–
Rx power	ditto	–
Tx wavelength	ditto	–

Tab. 25: Optical module information parameters HPRU

8.4.10 Maintenance > Engineering

Parameter	Description	Type
Engineering info		
Data update time	See description under 8.2.12, p. 43.	–
ARM CRC check	ditto	–
FPGA CRC check	ditto	–
HPRU CRC check	ditto	–
DPD switch		
CH *x* DPD switch		
OP info		
OP slave CPRI sync alarm	See description under 8.2.12, p. 43.	–
OP master CPRI sync alarm	ditto	–
OP slave LOS alarm	ditto	–
OP master LOS alarm	ditto	–
ALC indication		
CH *x* UL ALC working alarm	ditto	–
Advanced commands		
Hardware reset	ditto	–
Software reset	ditto	–
Alarm initialization	ditto	–
Alarm mode select	ditto	–
Test mode		
CH up-down link switch		W

Tab. 26: Engineering parameters HPRU

8.4.11 Maintenance > Factory Command

Parameter	Description	Type
Factory parameters		
Factory mode	See description under 8.2.13, p. 44.	–
Factory mode password	ditto	–

Tab. 27: Factory command parameters HPRU

8.4.12 Capacity Management > Service Configuration

Parameter	Description	Type
Capacity allocation switch		
Capacity allocation switch		W
Master C-hub carrier configuration information		
CH *x* CB0–CB1 (BW/UL/DL)		R
Slave C-hub 1 carrier configuration information		
CH *x* CB0–CB1 (BW/UL/DL)	See Master C-hub carrier configuration information	–
Slave C-hub 2 carrier configuration information		
CH *x* CB0–CB1 (BW/UL/DL)	See Master C-hub carrier configuration information	–
HPRU channel information		
CH *x* info (UL/DL)		R
Group 1 channel mapping information		
CH *x*		R
Group 2 ... 3 channel mapping information	See Group 1 channel mapping information	
RF channel mapping information		
Capacity group		W
HPRU CH *x*		W
Update		B

Tab. 28: Service configuration parameters HPRU

8.4.13 Capacity Management > Service Switch

Parameter	Description	Type
Sunday		
Working hours starting–ending (24 h)		W
Service group (working hours)		W
Service group (non-working hours)		W
Monday ... Saturday	See Sunday	

Tab. 29: Service switch parameters HPRU

9 Glossary

Abbreviation	Description
ADC	Analog to digital converter
AP	Access point
BTS	Base transceiver station
C-hub	Central hub
CB	Carrier bundle
CP	
DAC	Digital to analog converter
DDC	Digital down convert
DL	Downlink
DUC	Digital up convert
E-hub	Expansion hub
FDD	Frequency division duplexing
FPGA	Field programmable gate array
GSM	Global system for mobile communications
HPRU	High power remote unit
LTE	Long term evolution
NMS	Network management system
OMT	Operations and maintenance terminal
OP	Optical fibre
PA	Power amplifier
POI	Point of interface
RF	Radio frequency
RU	Remote unit
RX	Receiver
SNMP	Simple network management protocol
STP	Shielded twisted pair
TDD	Time division duplexing
TX	Transmitter
UL	Uplink
WCDMA	Wideband code division multiple access
WLAN	Wireless local area network

10 List of Diagrams

Fig. 1: Set TCP/IP properties master 16
Fig. 2: Browser address bar 16
Fig. 3: Login dialogue 16
Fig. 4: Set TCP/IP properties slaves 17
Fig. 5: Check TCP/IP properties slaves 17
Fig. 6: Browser address bar 18
Fig. 7: Web GUI of master C-hub 19
Fig. 8: Settings of the LAN connection (C-hub) 20
Fig. 9: SNMP parameters (C-hub) 21
Fig. 10: FTP parameters (C-hub) 22
Fig. 11: Define carrier bundles 24
Fig. 12: Input power parameters of the C-hub channels 25
Fig. 13: Band gain parameters (C-hub) 26
Fig. 14: Device alarm parameters (C-hub) 27
Fig. 15: Alarm levels (C-hub) 27
Fig. 16: Alarm threshold parameters (C-hub) 28
Fig. 17: Band gain parameters (HPRUs) 30
Fig. 18: Web GUI of master C-hub (homepage) 32

11 List of Tables

Tab. 1: Symbols and signal words 5
Tab. 2: Band configuration parameters C-hub 36
Tab. 3: System configuration parameters C-hub 37
Tab. 4: System status parameters C-hub 38
Tab. 5: Combiner parameters C-hub 39
Tab. 6: LAN connectivity parameters C-hub 40
Tab. 7: Device alarm parameters C-hub 41
Tab. 8: Downlink input power alarm parameters C-hub 42
Tab. 9: Alarm threshold parameters C-hub 42
Tab. 10: Optical module information parameters C-hub 42
Tab. 11: Engineering parameters C-hub 43
Tab. 12: Factory command parameters C-hub 44
Tab. 13: LAN connectivity parameters E-hub 46
Tab. 14: Alarm parameters E-hub 46
Tab. 15: Alarm threshold parameters E-hub 47
Tab. 16: Optical module information parameters E-hub 47
Tab. 17: Engineering parameters E-hub 48
Tab. 18: Factory command parameters E-hub 48
Tab. 19: System configuration parameters HPRU 50
Tab. 20: System status parameters HPRU 51
Tab. 21: Channel actual gain parameters HPRU 51
Tab. 22: LAN connectivity parameters HPRU 52
Tab. 23: Alarm parameters HPRU 53
Tab. 24: Alarm threshold parameters HPRU 53
Tab. 25: Optical module information parameters HPRU 54
Tab. 26: Engineering parameters HPRU 55
Tab. 27: Factory command parameters HPRU 55
Tab. 28: Service configuration parameters HPRU 56
Tab. 29: Service switch parameters HPRU 56

936.5468/0.92/ICS/0417/GB I Subject to change Copyright © Kathrein Solutions GmbH 2017 All Rights Reserved Title: istock.com I derrek

KATHREIN Solutions GmbH
Anton-Kathrein-Straße 1 – 3
83004 Rosenheim, Germany
Phone +49 8031 184-0
www.kathrein.com I k-bow@kathrein.de

KATHREIN

K-BOW

BRIDGE THE GAP

Installation Manual

INDOOR

Installation Manual K-BOW Platform 2
English

KATHREIN

Contents

1	**About this Document**	**4**
1.1	Version and Version History	4
1.2	Product and Manufacturer	4
1.3	Markings	4
1.4	Target Audience	5
1.5	Scope of the Document	5
1.6	Applicable Documents	6
1.7	Abbreviations	6
1.8	Disclaimer	6
2	**General Information**	**7**
2.1	General Safety Instructions	7
2.2	Safety Requirements for the Installation Locations	9
2.3	Installation and Operation	10
2.4	Electrical and Mechanical Safety	11
2.5	IC Warnings	12
2.6	FCC Warnings	13
2.7	Intended Use	14
2.8	K-BOW System Architecture	14
2.9	Scope of Delivery	16
3	**Preconditions and Requirements**	**18**
3.1	Preconditions for Installation	18
3.2	Requirements for the Installation Location	19
3.3	Required Material for Installation	21
4	**Installing the C-Hub**	**23**
4.1	Requirements and General Installation Instruction	23
4.2	Power Distribution Bars	24
4.3	Mounting C-Hub in Rack and Connecting Power and Ground	26
4.4	Mounting C-Hub on Wall and Connecting Power and Ground	28
5	**Installing the E-Hub**	**29**
5.1	Requirements and General Installation Instruction	29
5.2	Mounting E-Hub in Rack and Connecting Power and Ground	29
5.3	Mounting E-Hub on Wall and Connecting Power and Ground	29
6	**Installing the HPRU**	**30**
6.1	Mounting HPRU on Wall	30
6.2	Connecting Power and Ground Cable to HPRU	33
7	**Cabling**	**34**
7.1	Interfaces	34
7.2	Cabling	39
7.3	Helpful Hints for Cabling	43
8	**System Documentation**	**44**
9	**Glossary**	**45**

10 List of Diagrams 48
11 List of Tables 49

1 About this Document

1.1 Version and Version History

Version

0.92, April 2017

Version History

Version	Date	Description
0.91	March 2017	First release version
0.92	April 2017	Second release version

1.2 Product and Manufacturer

Item	Description
Product type	Capacity distribution system: K-BOW platform 2
Manufacturer's address	see last page

1.3 Markings

Symbol *Symbole*	Description
	General hazard indication *Avertissement général*
	Risk of damage to property *Risque de dommages matériels*
	Danger due to electricity *Danger électrique*
	Hot surface *Surface chaude*
	Danger due to rotating fan blades *Danger par des pales en rotation*

Symbol *Symbole*	Description
	Danger due to laser light *Danger par lumière laser*
	Laser light class 1 *Classe 1 laser*
	Crushing hazard *Risque d'écrasement*
	Non-ionising radiation radio frequency *Rayonnements non-ionisants de fréquence radio*

Signal words *Mentions d'avertis-sement*	Description
Danger	Immediate risk of death or serious physical injury *Risque immédiat de mort ou blessures corporelles graves*
Warning ***Avertis-sement***	Possible risk of death or serious physical injury *Risque potentiel de mort ou blessures corporelles graves*
Caution ***Prudence***	Possible risk of slight or moderately severe physical injury *Risque potentiel de blessures corporelles légères ou moyennement graves*
Notice ***Attention***	Potential damage to property *Risque de dommages matériels*
Tip ***Avis***	Instruction for operation or use of the instructions *Instructions d'emploi ou d'utilisation des instructions*

Tab. 1: Symbols and signal words

1.4 Target Audience

These instructions are targeted at persons who

- are familiar with the applicable terms and skills when installing and operating electrical systems for telecommunications (mobile telephony and data distribution systems).
- because of their technical training, knowledge and experience, together with the knowledge of the applicable regulations are able to assess the following work and recognise potential hazards:
  - Installation of devices for transmission of messages and data
  - Making up and connecting data transmission cables (LAN)
  - Making up and connecting power supply cables
  - Laying and connecting optical cables (fibre optic cables)

1.5 Scope of the Document

Tip This document describes the K-BOW platform 2, only. The K-BOW platform 1 is described in separate documents.

This document describes the installation of the K-BOW hubs, beginning from the BTS handover point[1)] to the E-hub . It describes the general requirements to the installation location, techniques for laying cables and refers to the applicable documents.

1) The BTS handover point is the point after the remote radio head or power amplifier of the BTS in which the BTS signal is tapped for the K-BOW system.

1.6 Applicable Documents

The documents applicable for the system description are

1.7 Abbreviations

See *Glossary*, p. 45.

1.8 Disclaimer

Changes or modifications not expressly approved by the party responsible for compliance could void the user's authority to operate the equipment.

The information and documentation contained in this document is strictly confidential and disclosed to the recipient only due to his/her particular relation to the KATHREIN-Werke KG.
The content of this document is protected by copyright law. It is prohibited to exploit, divulge or use the document or any information contained therein, also in parts, without the explicit prior permission of KATHREIN-Werke KG.
This document serves for informative purposes only and shall not bind KATHREIN-Werke KG in any way unless explicitly stated.
The content has been compiled to the best knowledge of KATHREIN-Werke KG.
Any warranty for actuality, completeness and correctness of the information contained in this document shall be excluded.

2 General Information

2.1 General Safety Instructions

- This document is an integral part of the K-BOW system platform 2.
- Read all K-BOW documentation completely, especially
  - before installing a K-BOW system platform 2,
  - before the first start-up,
  - before operating a system,
  - before performing any changes,
  - for regularly refreshing your knowledge about it.
- Keep the K-BOW documents for reference throughout the life of the system. Pass the K-BOW documents on to the next owner and user of the system.
- Read the installation instructions before starting the installation.
- The system documentation must always be available at the installation location.
  The system documentation comprises at least the following documents:
  - *K-BOW Platform 2 Safety Instructions*
  - *K-BOW Platform 2 Installation Manual*
  - *K-BOW Platform 2 System Description*
  - *K-BOW Platform 2 Operation and Maintenance*
  - *K-BOW Setup Manual*
- Always perform the measures described in the K-BOW documents in the sequence specified.
- Do not replace any modules, especially the PA module and duplexer module on site.
- The K-BOW equipment is intended to be earthed. Ensure that the racks are connected to a protective earthing conductor during normal use.
- When installing a K-BOW system, always connect it to a protective earthing conductor first and disconnect it last.
- The K-BOW system relies on the building installation for short-circuit (overcurrent) protection. Ensure that the protective device is rated in accordance with the configured K-BOW system.
- When installing the K-BOW system, comply with local and national electrical codes.
- Normal use of the system will not damage the base station; however, with the increase of RU during network coverage for indoor distribution, additive uplink noise resulting from the use of many RUs may affect the sensitivity of the base station, which should be considered during engineering design.
- While fibre optic power levels used in this system are very low, it is advisable to avoid exposing the human eye to the laser light emanating from a fibre port or plug.
- Prior to upgrading and plugging in units and parts, first disconnect the standby battery and power source.
- Signals coupled from the BTS shall be no greater than +15 dBm, otherwise the device will not operate normally and damage may occur to the circuit.
- Around the devices including their radiation fins, the safety clearance stated in Chapter 3.2.2, p. 19 must be complied with. Otherwise the device temperature may rise and affect the service life of the device.

- Field replacement is permitted. It is recommend to power off the device before replacing.
- Please use Shielded Twisted Pair (STP) for WLAN application.
- Protect against electrostatic discharge.
  Static electricity might harm sensitive components. To prevent this damage, discharge static electricity from your body before you touch equipment. You can also take the following steps to prevent damage that might result from electrostatic discharge.
  - When transporting equipment, first place it in an antistatic container or packaging.
  - Do not leave equipment where other people can handle and possibly damage it.
  - Take additional care when handling equipment during cold weather.
  - Take into account that heating reduces indoor humidity and increases static electricity.
- If any of the following conditions occur, immediately unplug the entire K-BOW system and contact an authorised technician.
  - The power cable, extension cord, or plug is damaged.
  - Any foreign object has entered the equipment.
  - The equipment has been exposed to any liquid.
  - The equipment has been dropped or damaged.
  - A serious damage is visible on the housing.
  - The equipment does not operate correctly when you follow its operating instructions.

  Do not switch on the system until
  - the single component has been repaired by the manufacturer,
  - damaged cables have been repaired or replaced by instructed service personnel.
- Do not cover any kind of forced air openings and passive heat-sink fins.
- Protect the system and all its components from any liquid.
- Do not open the housing of single components.
- Observe the respective manufacturer's manual when connecting an external device that is not described in the K-BOW documentation. Incorrectly connected devices can damage the system.
- Improper operation can damage the hardware of the system and can affect its function.
- The necessary personal protective equipment for the operating, maintenance and repair personnel must be accessible at any time.
- Safety and warning stickers on the systems and components must be clearly legible at any time and may not be removed.
  Replace any damaged warning stickers and attach new ones where missing.
- Take all necessary measures to attain the safety of the system. It is the operator's duty of care to plan these measures and make sure that they are duly carried out.
- The K-BOW system was developed and manufactured with due regard to the applicable safety standards stated in the *K-BOW Safety Instructions*, as well as further technical specifications.
  The product is state of the art and guarantees the highest possible degree of safety.
- When installing the K-BOW system, comply with local and national electrical codes.

2.2 Safety Requirements for the Installation Locations

2.2.1 General

- Install the C-hub and the E-hub indoors only as a stationary system in weather-protected and temperature-controlled locations. Sole exception are the HPRUs which are IPxx protected.
- Comply with the permissible ambient conditions stated in the data sheets of the K-BOW platform 2 components.
- Ensure that only authorised personnel are allowed access to the installation location(s) of the system rack (main rack and extension racks).

2.2.2 Installation Location of System Racks

- The static loading calculations must ensure that a rack up to 500 kg in weight can be erected and operated.
- The permissible ambient temperature range of the system is –10 to +45 °C (ambient air)[1], the permissible maximum humidity is 85 %. For more details, see the data sheets of the individual devices.
- If required, install active cooling (air conditioning) to ensure the permissible ambient temperature of the system is satisfied.
- For proper ventilation, the clearance above and below each C-hub or E-hub must be at least 2 HU.
- The installation location must be larger than 1000 × 800 × 2500 mm.
- The safety clearance between rack and adjacent walls must be at least 200 mm.
- The safety clearance between adjoining systems must be complied with. See the specifications of the companies operating the adjoining systems.
- If you use racks other than those recommended by Kathrein, make sure that the following conditions are satisfied:
  - All height units not used must be blanked off.
  - The door must permit the passage of air over its entire surface, for instance by perforation.
  - The cooling air must flow through the rack from the front between the K-BOW components, upwards and to the back where it is exhausted.
  - The cooling air fans at the top of the rack must be capable of a throughput of ≥ 960 m^3/h unimpeded air flow.

[1] The permissible ambient temperature range applies to the racks recommended by Kathrein. These racks ensure optimum dissipation of heat.

2.2.3 Installation Location of Remote Units and Antennas

The installation location of remote units and antennas must satisfy the following requirements:

- When installing remote units and antennas, the *Installation Manual (K-BOW Platform 2)* has to be considered.

Caution

Risk of injury due to non-ionising radiation radio frequency

When installing the antennas, pay attention to the required distance of at least 205 cm between antennas and human bodies during normal operation according to ETSI EN 62311.

- The safety clearance around remote units and antennas stated in the *Installation Manual (K-BOW Platform 2)* must be complied with.
- It is recommended to meet a minimum distance of 1 m between K-BOW antennas and ISM equipment to avoid unwanted interference with WiFi or DECT or other equipment running in the 2.4 GHz ISM band.
- The installation positions must be level.[1)]
- The static loading calculations must ensure that a K-BOW remote unit up to 15 kg in weight can be installed and operated.
- The safety clearance between adjoining systems must be complied with. See the specifications of the companies operating the adjoining systems.
- Observe the permissible operational conditions of the remote units, especially the ambient temperature. The permissible operational conditions depend on the type of the remote unit and can be found in the data sheets of the remote units.

[1)] If a remote unit is installed on an installation position that is not flat, the casing may be distorted and thereby damaged when it is attached.

2.3 Installation and Operation

2.3.1 General

- Observe the national standards, rules and regulations valid at the installation location with regard to
  - the cable path from the power distribution to the system rack,
  - the fire safety,
  - the running of cables in escape routes.
- For network cabling, use Ethernet Cat 5 cables or better.
- As an operator of K-BOW, ensure that the K-BOW system is only used according to its intended use.
- Only operate the K-BOW system if it is in perfect working order.
- Check the safety installations regularly for proper operation and observe the national standards, rules and regulations valid at the installation location.
- Observe the standards stated in the document *Safety Instructions (K-BOW Platform 2)*, for the installation, approval and operation of the K-BOW system.

2.4 Electrical and Mechanical Safety

Warning

Risk of injury due to electricity.

- All K-BOW racks must be connected to a protective earthing conductor.
- Do not connect system components to the power supply during installation. Connection to the power supply must be performed by a trained, qualified and authorised specialist.
- Disconnect the system from external power before disassembly.
- Only install and uninstall system components if they are de-energised.
- Do not touch parts that are at a hazardous voltage. This also applies if fuses inside the device have been removed.
  The system has a supply voltage of up to 240 V alternating voltage. If touched, there is a risk of death due to electric shock.
- Install the socket near the equipment and make sure it is easily accessible.
- An appropriate fuse protection for all power supply feed lines of the K-BOW system protection must be provided by the customer.
  All power supply feed lines of the K-BOW system must be equipped with an overvoltage protector for medium voltage loads and automatic circuit breakers (delay fuse) of 10 A max. for overcurrent protection.
  The correct performance must be checked and recorded according to current regulations.
- Only IEC-60320 C13/C14 power supply cables and appliance couplers specified for 10 A min. continuous load are allowed.
- Observe extension cord and power strip ratings. Make sure that the total ampere rating of all products plugged into the extension cord or power strip does not exceed 80 percent of the extension cord or power strip ampere rating limit.
- Do not modify power cords or plugs. Consult a licensed electrician or your power company for site modifications. Always follow your local and national wiring rules.
- Unplug the power cable(s) of a switched-mode power supply to completely disconnect the power supply unit and the connected devices from the mains. If redundant switched-mode power supplies are used, unplug the power cables of all power supply units concerned.
- All fuses inside the system may only be replaced by original parts.

Warning

Risk of injury due to hot surface.

Do not touch hot surfaces during operation. Allow hot surfaces to cool before touching them.

Notice

Risk of damage to property due to electricity.

- Install the C-hub and E-hub in a closed and locked rack to prevent unauthorised access and any impact due to ESD.
- It is recommended to earth the remote units to ensure their electromagnetic compatibility (EMC).
- Earth electrically powered test equipment.
  - Before connecting the test probe, connect test equipment and board/module using an earth lead.
  - After testing, first remove the test probe and then the earth lead.
- The K-BOW system must not be operated with configured and/or activated signal paths when no antenna is connected to the remote units.
- If cables are run in cable trays, earth cables and live cables must be separated by walls from RF coaxial and fibre optic cables. Observe the guidelines in the *K-BOW Platform 2 Installation Manual*.
- When accessing the radio frequency signal, confirm that the downlink signal is no stronger than 15 dBm. Otherwise the device will not operate normally and damage may occur to the circuit.

2.5 IC Warnings

Note This device complies with Industry Canada license-exempt RSS standard(s). Operation is subject to the following two conditions:
(1) this device may not cause interference, and
(2) this device must accept any interference, including interference that may cause undesired operation of the device.

Le présent appareil est conforme aux CNR d'Industrie Canada applicables aux appareils radio exempts de licence. L'exploitation est autorisée aux deux conditions suivantes :
(1) l'appareil ne doit pas produire de brouillage, et
(2) l'utilisateur de l'appareil doit accepter tout brouillage radioélectrique subi, même si le brouillage est susceptible d'en compromettre le fonctionnement.

2.6 FCC Warnings

(1)

Note	This device complies with Part 15 of the FCC Rules. Operation is subject to the following two conditions: (1) this device may not cause harmful interference, and (2) this device must accept any interference received, including interference that may cause undesired operation.

(2)

Note	This equipment has been tested and found to comply with the limits for a Class A digital device, pursuant to Part 15 of the FCC Rules. These limits are designed to provide reasonable protection against harmful interference in a residential installation. This equipment generates, uses and can radiate radio frequency energy and, if not installed and used in accordance with the instructions, may cause harmful interference to radio communications. However, there is no guarantee that interference will not occur in a particular installation. If this equipment does cause harmful interference to radio or television reception, which can be determined by turning the equipment off and on, the user is encouraged to try to correct the interference by one or more of the following measures: ● Reorient or relocate the receiving antenna. ● Increase the separation between the equipment and receiver. ● Connect the equipment into an outlet on a circuit different from that to which the receiver is connected. ● Consult the dealer or an experienced radio/TV technician for help.

(3)

Note	Only authorized person can enter the area where the antenna is installed. And the person is fully aware of the potential for exposure and can exercise control over his or her exposure by leaving the area or by some other appropriate means. Awareness of the potential for RF exposure in a workplace or similar environment can be provided through specific training as part of a RF safety program

(4)

Warning

Changes or modifications to this equipment not expressly approved by KATHREIN could void the user’s authority to operate the equipment. At least two persons are required to carry 19" racks to avoid injuries.

(5)

Warning

Antenna gain should not exceed 7 dBi.

(6)

Warning

To comply with FCC RF exposure compliance requirements, each individual antenna used for this transmitter must be installed to provide a separation distance greater than 205 cm or more from all persons during normal operation and must not be co-located with any other antenna for meeting RF exposure requirements.

(7)

Warning

This is NOT a CONSUMER device. It is designed for installation by FCC LICENSEES and QUALIFIED INSTALLERS. You MUST have an FCC LICENSE or express consent of an FCC License to operate this device. Unauthorized use may result in significant forfeiture penalties, including penalties in excess of $100,000 for each continuing violation.

2.7 Intended Use

The K-BOW system is a micro C-RAN solution to provide flexible and efficiently scalable coverage and capacity for multi-operator and multi-band scenarios using a common infrastructure. The system offers mobile radio single routing capabilities to support flexible sectoring for network load balancing as well as individual signal power optimization of remote RF unit level. The system use cases are the following:

- Operating K-BOW as a repeater by
  - interfacing cable based RF signals from base stations to the C-hub,
  - relaying the radio signal of the base stations into at least one or multiple radio cells via remote units with antennas connected to these using coaxial cables,
- Routing base station signals
- Supporting MIMO operation on selected bands

2.8 K-BOW System Architecture

The K-BOW system architecture is described in the document *K-BOW System Description*.

2.9 Scope of Delivery

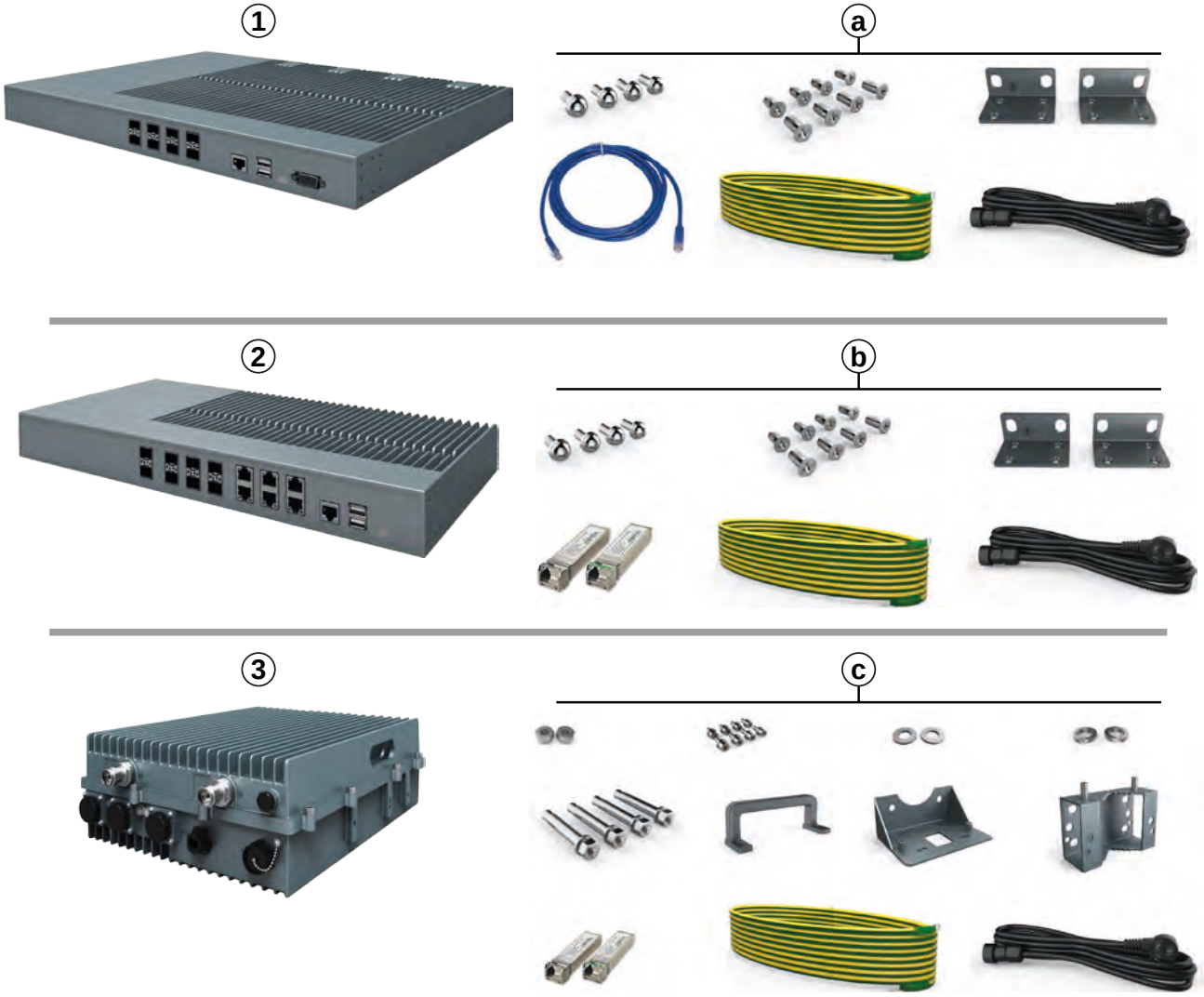

Fig. 1: Scope of delivery

①	**C-hub**
ⓐ	Mounting and cabling accessories for C-hub • 4 × screw M6×16 • 8 × screw M3×16 • 2 × 19" mounting bracket • 1 × Ethernet Cat 5 cable, 1.5 m • 1 × ground wire, 2 m • 1 × AC power lead, 2.5 m, country-specific
②	**E-hub**
ⓑ	Mounting and cabling accessories for E-hub • 4 × screw M6×16 • 8 × screw M3×16 • 2 × 19" mounting bracket • 2 × optical transceiver[1)] • 1 × ground wire, 2 m • 1 × AC power lead, 2.5 m, country-specific
③	**HPRU**
ⓒ	Mounting and cabling accessories for HPRU • 2 × nut M10 • 8 × screw M6×14 • 2 × flat washer M10 • 2 × spring washer M10 • 4 × expansion bolt M10×90 • 1 × handle • 1 × mounting bracket Ⓐ • 1 × mounting bracket Ⓑ • 2 × optical transceiver[1)] • 1 × ground wire, 2 m • 1 × AC power lead, 2.5 m, country-specific

[1)] 1 × FTLX2071D327, 1 × FTLX2071D333

3 Preconditions and Requirements

3.1 Preconditions for Installation

Before starting the installation,

- check the delivery for completeness; cf. *2.9, p. 16* .
- contact the project manager and make sure that all planning documents necessary for installation are finalised and available on site.[1)]
- all points on the checklist *Ready for Installation* must have been satisfied. The template for this checklist is provided by Kathrein during the installation training.
- the handover point for the BTS signals must have been specified and be available; examples are shown in Fig. 2 and Fig. 3. This installation manual describes the installation of the system from this handover point to the E-hub.

The following information must be available to the installer when starting the installation:

- Detailed location address
- Phone number, email and address of:
  - Customer’s contact person
  - Facility manager of the building
  - Site manager
  - Installation company's site manager
  - Responsible Kathrein project manager
  - Contact person at the mobile network provider
- The following documents must be available:
  - Cabling plan
  - Installation plan

1) Amongst others, the following items must be verified: signal intensity, signal quality, required coverage range, device location, antenna-feeder system and power supply system.

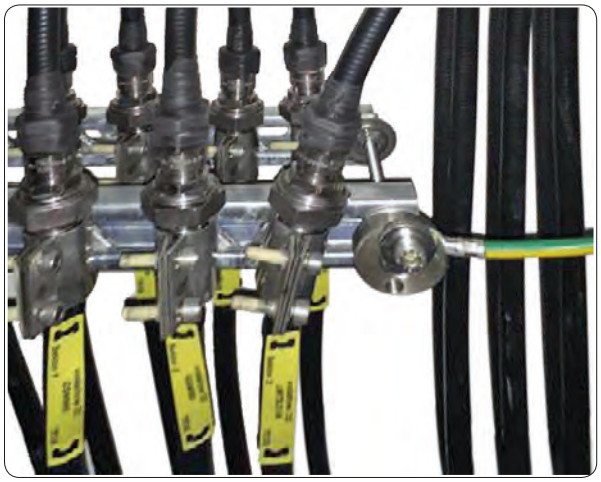

Fig. 2: Example of a handover point for the BTS signals at a c-rail

Fig. 3: Example of a handover point for the BTS signals with individual loads with short patch cables at a c-rail

3.2 Requirements for the Installation Location

3.2.1 General

- Install the K-BOW system indoors only and as a stationary system in weather-protected and temperature-controlled locations.
- Comply with the permissible ambient conditions stated in the data sheets of the K-BOW components.
- Ensure that only authorised personnel are allowed access to the installation location(s) of the system rack (main rack and extension racks).

3.2.2 Rack Installation

The installation location of the rack for the C- and E-hub must

- be indoor,
- be larger than 1000 × 800 × 2500 mm,
- be at least 200 mm away from the wall.
- provide a clearance of at least 3 HU of height above and below any C-hub or E-hub (Ⓐ in Fig. 4),
-
- provide sliding rails for weight unloading.

Fig. 4: Clearance Ⓐ above radiation fins of the installed devices

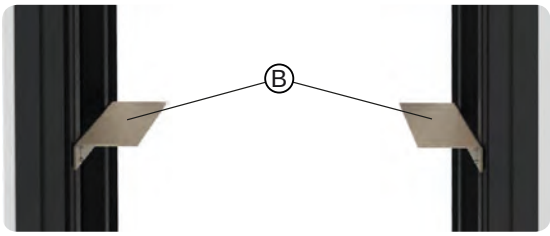

Fig. 5: Sliding rails Ⓑ

3.2.3 Wall Installation

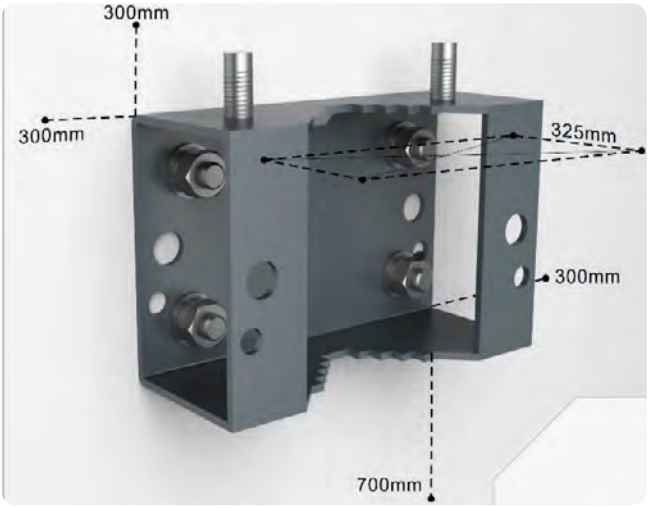

- The static loading calculations must ensure that a rack up to 500 kg in weight can be erected and operated.
- The permissible ambient temperature range of the system is –5 to +55 °C (ambient air).[1)]
- If required, install active cooling (air conditioning) to ensure the permissible ambient temperature of the system is satisfied.
- The safety clearance between adjoining systems must be complied with. See the specifications of the companies operating the adjoining systems.
- If you use racks other than those recommended by Kathrein, make sure that the following conditions are satisfied:
  - All height units not used must be blanked off.
  - The door must permit the passage of air over its entire surface, for instance by perforation.
  - The cooling air must flow through the rack from the front between the K-BOW components, upwards and to the back where it is exhausted.
  - The cooling air fans at the top of the rack must be capable of a throughput of ≥ 960 m^3/h unimpeded air flow.

1) The permissible ambient temperature range applies to the racks recommended by Kathrein. These racks ensure optimum dissipation of heat.

3.3 Required Material for Installation

3.3.1 Required Tools

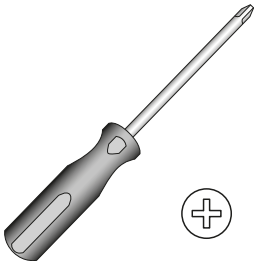

Phillips screwdriver
M3 and M6

Pen

For wall mounting only:
Drilling machine and drills[1)]

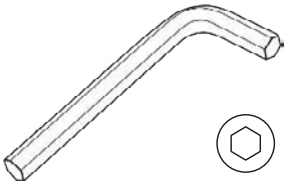

Allen wrench T5

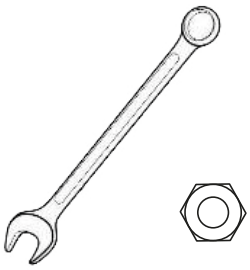

Combination spanner 17 mm

1) Drills have to be provided according to the material of the mounting surface and the mounting accessories used. For more details see 3.3.2.

3.3.2 Required Mounting Accessories

Mounting Accessories Included in Delivery

The mounting accessories included in delivery are described under 2.9, p. 16.

Mounting Accessories *Not* Included in Delivery

Wall-mounting accessories[1)] are not included in delivery.
Only exception: the expansion bolts for mounting the HPRU.

1) e.g. fixing screws, washers, dowels

Notice

Risk of damage to the devices.

The fixing screws must comply with the following requirements:

- Recommended type of screws: Spax (chipboard) screws with wafer head and torx profile. Do not use countersunk head screws.
- Max. diameter:
  - C- and E-hub: 6 mm
  - HPRU: 10 mm
- Max. admissible tightening torque: M_{max} = 1.5 Nm
- Choose the dowel and mounting hole diameter accordingly.

3.3.3 Required Documents

For the installation, the following documents are necessary:

- **Cable plan**
  For all the cables and components, the cable plan describes the
  - numbering,
  - labelling and
  - installation, e.g. which RU is connected to which E-hub etc.

4 Installing the C-Hub

4.1 Requirements and General Installation Instruction

Warning

Risk of electric shock.

► Do not connect the unit to the power supply during installation.
Connection to the power supply must be performed by a trained, qualified and authorised specialist.

Warning

Crushing hazard. 19" racks can be very heavy.

► At least two persons are required to carry 19" racks to avoid injuries.

4.1.1 Requirements for the C-Hub

Kathrein offers racks with the necessary characteristics. If other racks are used, these must also satisfy the following required characteristics.

- The K-BOW system rack must be installed upright. This can be done by adjusting the height-adjustable rack feet, using a spirit level.
- A 5-pin CEE socket and distributor according to DIN 60309 is required for the power supply of each circuit in the power distribution bars. Two sockets are required for each 42-HU rack. One socket is required for the 24-HU rack. Each 5-pin CEE socket must be protected by a D curve miniature circuit breaker (Europe) with 3 × 10 A (delay fuse).
- For the installation of the components, the rack must be accessible from at least one side. To make installation of the components in the rack easier, we recommend that the rack is accessible from two sides.
- The rear panel and side panels must contain lockable access doors. The doors must extend over the entire rear and side panels.
- If you use racks which are not recommended by Kathrein, these racks must comply with the following specifications:
  - All height units not used must be blanked off.
  - The door must permit the passage of air over its entire surface, for instance by perforation.
  - The cooling air must flow through the rack from the front between the K-BOW components, upwards and to the back where it is exhausted.

4.2 Power Distribution Bars

Notice

Risk of reduced operational reliability because of power failure. Make sure that the 230 VAC power supply to the K-BOW system rack satisfies the following conditions:

- 3 or 6 power distribution modules are used in order to ensure redundancy of the power supply; see the planning document. Furthermore:
  - For reasons of operational reliability (redundancy), each power distribution module must be connected to a different phase.
  - Each of the 3 PSUs of the PDU, BSR, FSR is connected to its own power distribution module.
  - A maximum of 4 PSUs may be connected to each power distribution module.
- The power available must correspond to the power consumption of the K-BOW system. The required amount of power supplies is specified in the rack layout plan depending on the system design.
- The electrical fuses and protective elements in the power supply must match the power consumption of the K-BOW system and satisfy the national regulations.
- The grounding conductors (potential equalisation) and data conductors (incl. hybrid cables) must **at all points** be **at least 50 mm** apart. Therefore, use **separation strips** in cable ducts and on cable trays.

A. Install the power distribution modules to the power distribution bar on the left-hand side of the rack (① in Fig. 6). In doing so, install the first three modules with the red arrow ② facing upwards, and the next three modules (if required) with the black arrow facing upwards.

B. Plug in the power cable on the top of the power distribution bar:
- For the three modules in the red circuit (red arrow faces upwards), use the connection on the left side (① in Fig. 7).
- For the tree modules in the black circuit, use the connection on the right side (②).

Warning

Risk of electric shock.

► Do not connect the unit to the power supply during installation.
Connection to the power supply must be performed by a trained, qualified and authorised specialist.

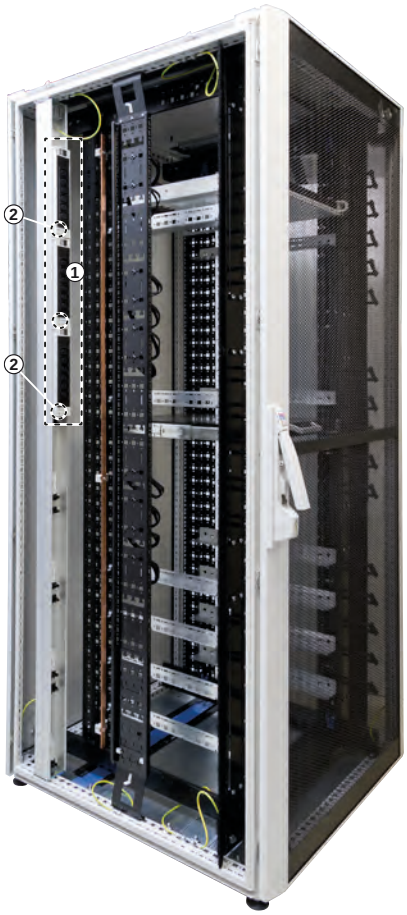

Fig. 6: Power distribution bar ① mounted on the left-hand traverse

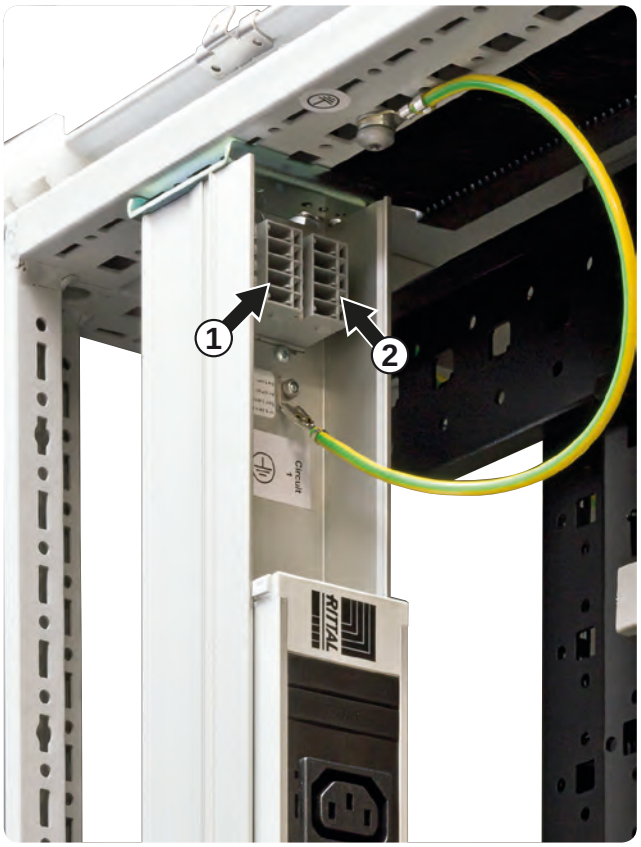

Fig. 7: Plugs for power connection: ① is for red circuit, ② for black circuit

4.3 Mounting C-Hub in Rack and Connecting Power and Ground

✓ The 19" rack is mounted according to the requirements for the installation location; see 3.2.2, p. 19.

✓ The mounting accessories and tools are available as specified in 3.3, p. 21 .

Attach handle to C-hub

► Attach the 19" mounting brackets to the C-hub front, using 4 screws M3×16 per bracket and the Phillips screwdriver. Observe the orientation of the brackets shown in Fig. 8.

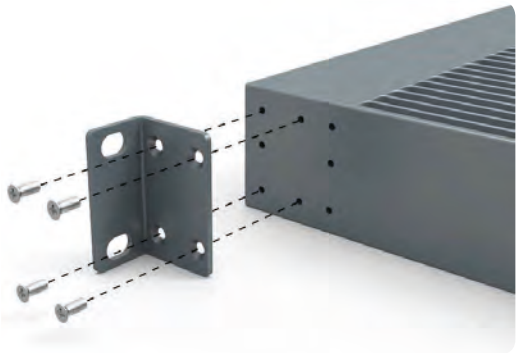

Fig. 8: Attaching a 19" mounting bracket

Attach sliding rails and C-hub to rack

1. Attach the sliding rails Ⓑ[1] to the rack (Fig. 9).
2. Place the C-hub in the rack (Fig. 10).
3. Fix the C-hub. For this purpose, attach 2 screws M6×16 on either side using the Phillips screwdriver (Fig. 11).

[1] not included in delivery

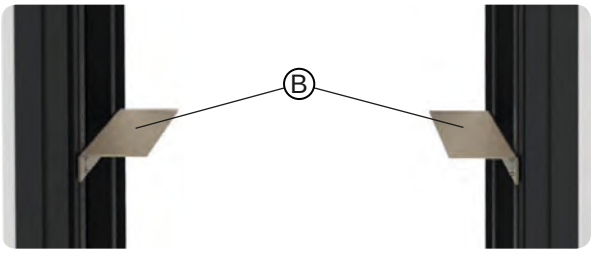

Fig. 9: Attached sliding rails Ⓑ

Fig. 10: Place C-hub in rack

Fig. 11: Fix C-hub with screws

Connect power and ground cable to C-hub

1. Connect and lock the power cable at the C-hub rear side (Fig. 12).
2. Connect and screw the ground wire at the C-hub rear side (Fig. 13).
3.

[1] not included in delivery

Fig. 12: Connect power cable at rear side

Fig. 13: Connect ground cable at rear side

4.4 Mounting C-Hub on Wall and Connecting Power and Ground

✓ The installation location complies with the specification given in 3.2.3, p. 20.

✓ The mounting accessories and tools are available as specified in 3.3, p. 21 .

Attach handle to C-hub

► Attach the 19" mounting brackets to the C-hub rear, using 4 screws M3×16 per bracket and the Phillips screwdriver. Observe the orientation of the brackets shown in Fig. 14.

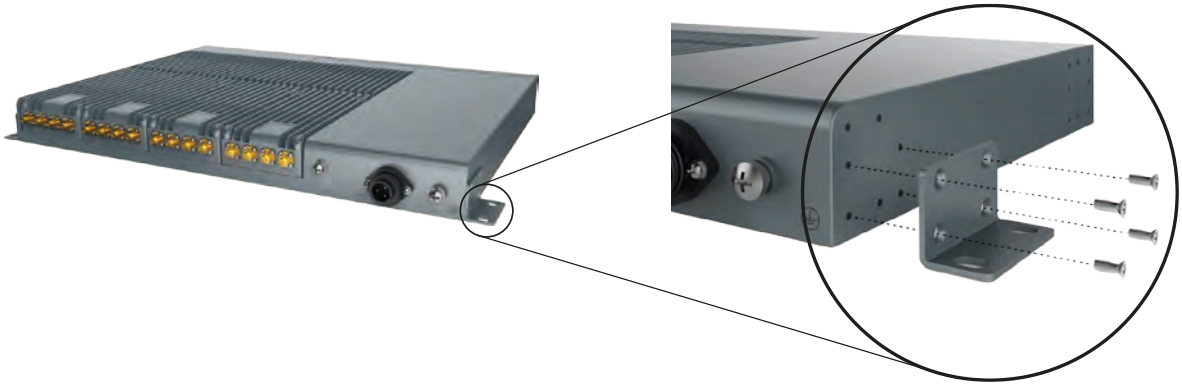

Fig. 14: Attaching a 19" mounting bracket

Mount C-hub to wall

1. Hold the C-hub to the installation location and mark the position of the 4 mounting holes in the mounting brackets; see arrows in Fig. 15.
2. Drill the mounting holes according to the chosen mounting accessories.
3. Attach the dowels, expansion screws or the like and fasten the C-hub to the wall (Fig. 16).

Fig. 15: Marking position of mounting holes

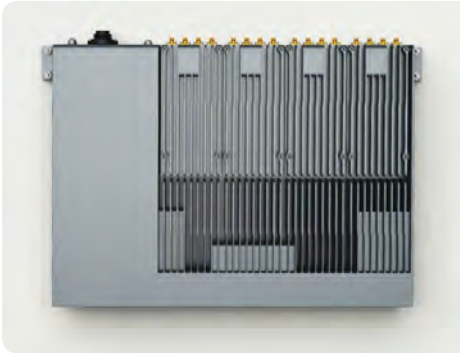

Fig. 16: Mounting completed

Connect power and ground cable to C-hub

1. Connect and lock the power cable at the C-hub rear side; see Fig. 17.
2. Connect and screw the ground wire at the C-hub rear side; see Fig. 18.
3.

[1] not included in delivery

Fig. 17: Connect power cable at rear side

Fig. 18: Connect ground cable at rear side

5 Installing the E-Hub

5.1 Requirements and General Installation Instruction

For installing the E-hub, the requirements and general installation instructions described for the C-hub under 4.1, p. 23 apply, too.

5.2 Mounting E-Hub in Rack and Connecting Power and Ground

► Proceed as described under 4.3, p. 26 to mount the E-hub in the rack and connect the power and the ground cable.

5.3 Mounting E-Hub on Wall and Connecting Power and Ground

► Proceed as described under 4.4, p. 28 to mount the E-hub on the wall and connect the power and the ground cable.

6 Installing the HPRU

6.1 Mounting HPRU on Wall

✓ The installation location complies with the specification given in 3.2.3, p. 20.
✓ The mounting accessories and tools are available as specified in 3.3, p. 21 .

Attach handle and mounting bracket Ⓐ to the HPRU

1. Attach the handle at the HPRU side, using 2 screws M6×14 and the T5 allen wrench (Fig. 19).
2. Attach the mounting bracket Ⓐ at the HPRU back, using 4 screws M6×14 and the T5 allen wrench (Fig. 20).

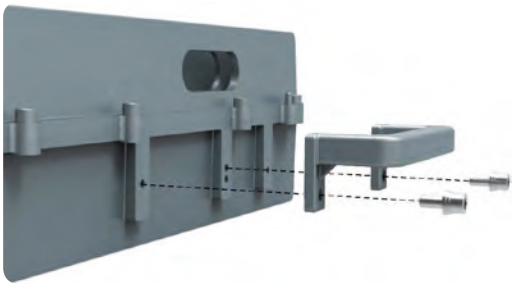

Fig. 19: Attaching handle

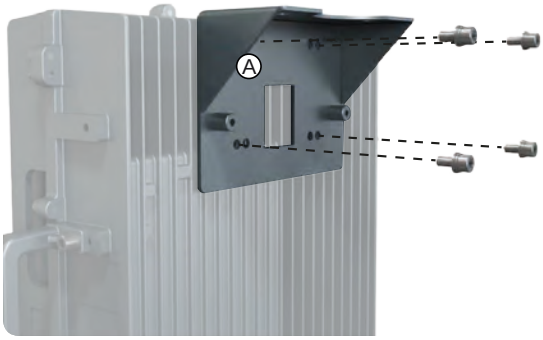

Fig. 20: Attaching bracket Ⓐ

Mount mounting bracket Ⓑ to the wall

Tip Below, mounting is described for using the included expansion bolts. If you use other mounting accessories, proceed accordingly.

1. Hold the bracket Ⓑ to the installation location and mark the position of the 4 mounting holes; see arrows in Fig. 21.
2. Drill ∅ 10 mm mounting holes which are at least 90 mm deep.
3. Plug the expansion bolts into the mounting holes and then remove the nuts and washers (Fig. 22).
4. Attach the bracket Ⓑ to the extension bolts in the wall and place the washers and the nuts on the bolts in the order shown in Fig. 23.
5. Tighten the nuts using the 17 mm combination spanner; Fig. 24 shows the result.

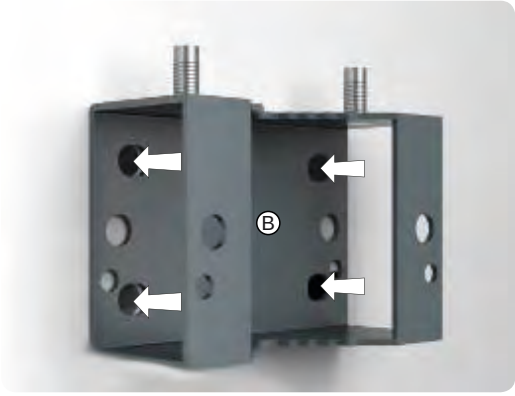

Fig. 21: Marking mounting holes for bracket Ⓑ

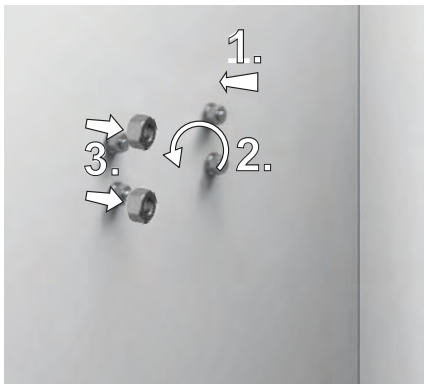

Fig. 22: Prepare expansion bolts for bracket Ⓑ

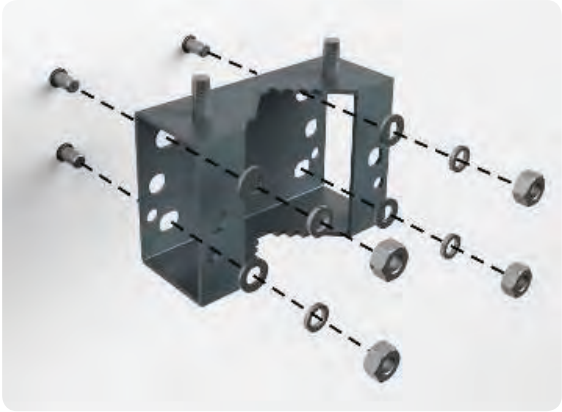

Fig. 23: Mounting accessories for bracket Ⓑ

Fig. 24: Bracket Ⓑ mounted

Attach HPRU to bracket Ⓑ

1. Hook the HPRU to the bracket Ⓑ (① in Fig. 25).
2. Place the M10 mm flat/spring washers and the nuts on the bracket Ⓑ bolts in the correct order (② in Fig. 25).
3. Tighten the nuts using the T5 allen wrench. Fig. 26 shows the result.
4. Fix the HPRU from the side using 2 screws M6×14 and the T5 allen wrench; see arrows in Fig. 27.

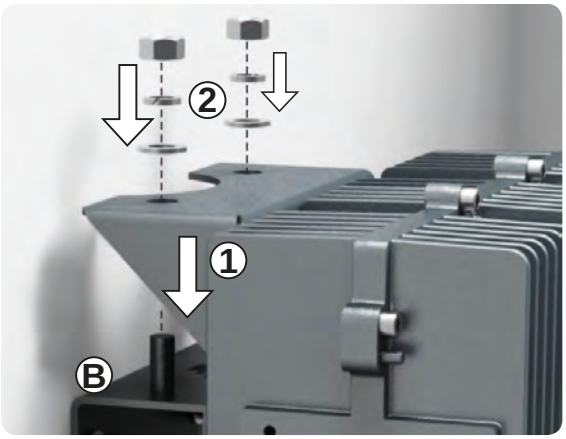

Fig. 25: Hook HPRU into bracket Ⓑ (①) and fix from top (②).

Fig. 26: HPRU fixed from top

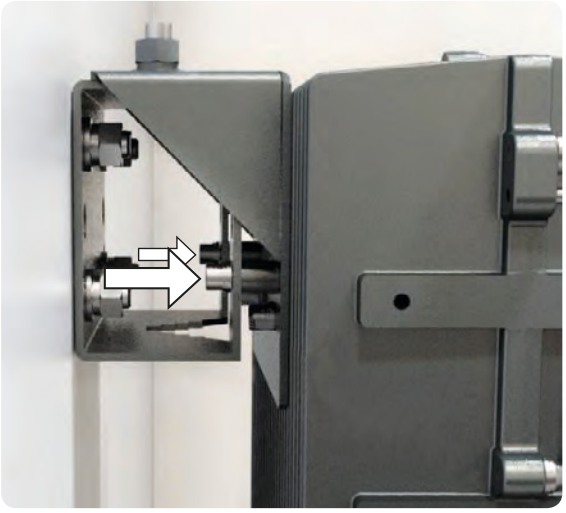

Fig. 27: Fix HPRU from side

6.2 Connecting Power and Ground Cable to HPRU

1. Connect and lock the power cable at the HPRU rear side; see Fig. 28.
2. Connect and screw the ground wire at the HPRU rear side; see Fig. 29.
3.

[1] not included in delivery

Fig. 28: Connect power cable at bottom side

Fig. 29: Connect ground cable at bottom side

7 Cabling

7.1 Interfaces

7.1.1 C-Hub (Master and Slave)

Front Side

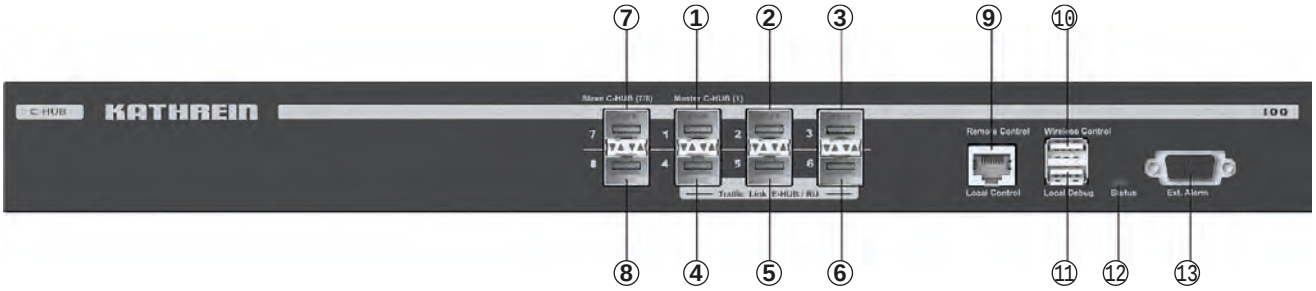

Fig. 30: Interfaces at the C-hub front side

No.	Connector	Function
①	optical port with SFP module[1) 2) 3)]	*Master C-hub:* Connects to E-hub or RU at next lower level *Slave C-hub:* Connects to Master C-hub
② – ⑥	optical port with SFP module[1) 2) 3)]	*Master C-hub:* Connects to E-hub or RU at next lower level *Slave C-hub:* not used
⑦ – ⑧	optical port with SFP module[1) 2) 3)]	*Master C-hub:* Connects to slave C-hub *Slave C-hub:* not used
⑨	RJ45, for Ethernet cables	Connects the operation and maintenance centre for remote monitoring Connects a PC/notebook for local monitoring via the C-hub web interface
⑩	USB, type A	Connects WLAN adapters for wireless device monitoring
⑪	USB, type A	Connects local debugging PC/notebook
⑫	LED	**SYS LED**, indicating the device operating status: ***green:*** ok; ***orange:*** failure
⑬	D-sub 9-pin	Connects external alarm interface for environment monitoring

Rear Side

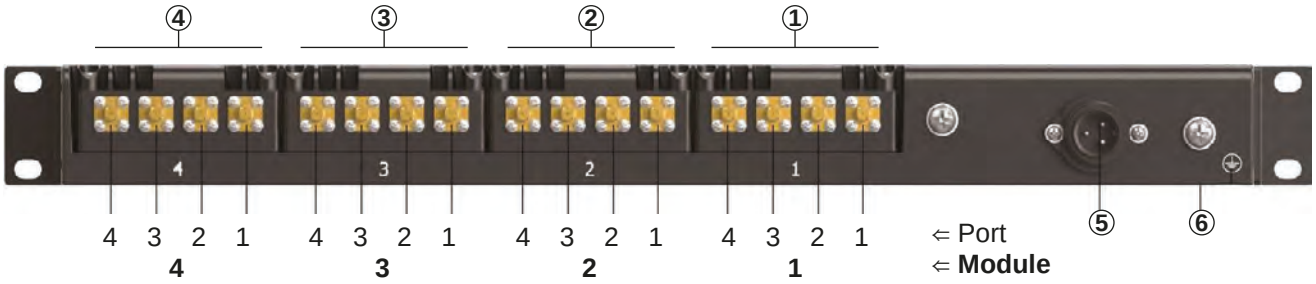

Fig. 31: Interfaces at the C-hub rear side

No.	Connector	Function
① – ④	F-SMA	Module 1 – 4 TRX ports, connect to BTS
⑤	/	Connects mains cable[1)]
⑥	/	Connects ground wire[1)]

1) Included in delivery

2) For optical cables with duplex LC connector

3) Via the optical connection, user and control data are transmitted.

7.1.2 E-Hub

Front Side

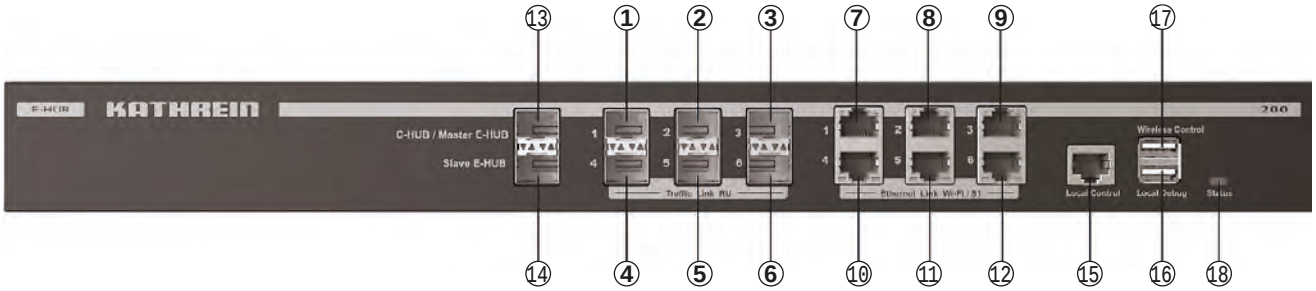

Fig. 32: Interfaces at the E-hub front side

No.	Connector	Function
① – ⑥	optical port with SFP module[1) 2) 3)]	Connects to RU
⑦ – ⑫	RJ45	Ethernet ports 1 – 6 for WLAN signals or S1 signals input
⑬	optical port with SFP module[1) 2) 3)]	*Master E-hub:* Connects to C-hub *Slave E-hub:* Connects to E-hub at next higher level
⑭	optical port with SFP module[1) 2) 3)]	*Master E-hub:* Connects to E-hub at next lower level
⑮	RJ45	Connects a PC/notebook for local monitoring via the C-hub web interface
⑯	USB, type A	Connects WLAN adapters for wireless device monitoring
⑰	USB, type A	Connects local debugging PC/notebook
⑱	LED	SYS LED, indicating the device operating status: *green:* ok; *orange:* failure

Rear Side

Fig. 33: Interfaces at the E-hub rear side

No.	Connector	Function
①	/	Connects mains cable[1)]
②	/	Connects ground wire[1)]

1) Included in delivery

2) For optical cables with duplex LC connector

3) Via the optical connection, user and control data are transmitted.

7.1.3 HPRU

Connector Side

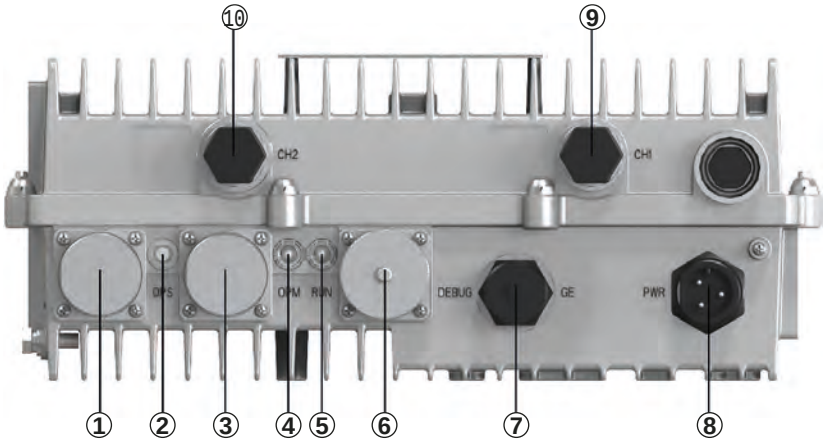

Fig. 34: Interfaces at the HPRU connector side

No.	Connector	Function
①	optical port with SFP module[1) 2) 3)]	Connects to a master C-hub, an E-hub or to a RU at next higher level
②	LED	**OPS** LED, indicates the status of ①: ***green:*** ok; ***orange:*** failure
③	optical port with SFP module[1) 2) 3)]	Connects to a RU at next lower level
④	LED	**OPM** LED, indicates the status of ③: ***green:*** ok; ***orange:*** failure
⑤	LED	**SYS LED**, indicating the device operating status: ***green:*** ok; ***orange:*** failure
⑥	RJ45	Connects a PC/notebook for local monitoring via the C-hub web interface
⑦	RJ45	Ethernet port for WLAN or small cell signal output
⑧	/	Connects mains cable[1)]
⑨ – ⑩	4.3-10 female	Module interface 1 and 2, connects to antenna feeder system

1) Included in delivery

2) For optical cables with duplex LC connector

3) Via the optical connection, user and control data are transmitted.

7.2 Cabling

7.2.1 Safety Instructions

Warning

Risk of electric shock.

► Do not connect the unit to the power supply during installation.
Connection to the power supply must be performed by a trained, qualified and authorised specialist.

Notice

Risk of damage to the cables!

There is a risk of malfunctions if cables are damaged because they are bent more than the minimum bend radius permits, or if cable fasteners are overtightened. Such damage is not evident from outside and will lead to signal errors.
Comply with the *K-BOW Cabling Guidelines* when laying (bending) and fixing optical fibre and other cables.

- When doing the work described in this chapter, comply with the cabling rules in the document *K-BOW Cabling Guidelines*.
- Perform the cabling strictly as described in the document *K-BOW Setup Manual* and in the planning document for the system.
- Throughout all cabling work, comply with the minimum bending radii[1)] for the cables; this is particularly critical for fibre optic cables and hybrid cables.
- Fasten the cables as follows:
  - If possible, use Velcro straps[2)] to secure fibre optic cables, hybrid cables, coax cables[3)] and other sensitive cables.
  - If you only have plastic cable ties: Tighten the cable ties only to such an extent that the cables are by no means compressed, deformed or squeezed.
  - If possible, only use plastic cable ties for the power supply cables laid vertically from the power supply units to the PSUs. Tighten cable ties by hand without too much force[4)] and trim the free ends.
- Label the cables as soon as they are laid[5)] and document the label text[6)].
- The illustrations in this chapter show only basic examples for the cabling between components.
- For more information about the cabling of the remote units, see the document *Installation Manual (K-BOW Platform 2)* and the installation instructions for the remote units.

1) The permissible bending radii can be found in the cable data sheets.
2) Velcro straps are less likely to deform the cables and are more flexible to handle than cable ties.
3) Coax cables from the base station to the load unit.
4) Do not use any tools to tighten the ties. This is particularly critical for fibre optic and hybrid cables.
5) See *Applying Labelling*, p. 42
6) See document *K-BOW Numbering Scheme*

7.2.2 Cabling the Fibre Optics Connections

✓ The fibre optic cables for connecting the hubs and RUs are provided.

1. Carefully insert the required SFP modules. In doing so, observe the colour labelling of the SFP modules indicated in Fig. 35.
2. Remove the protective caps (fibre optics, SFP modules) and install the required fibre optic connections. Fig. 35 gives an overview.

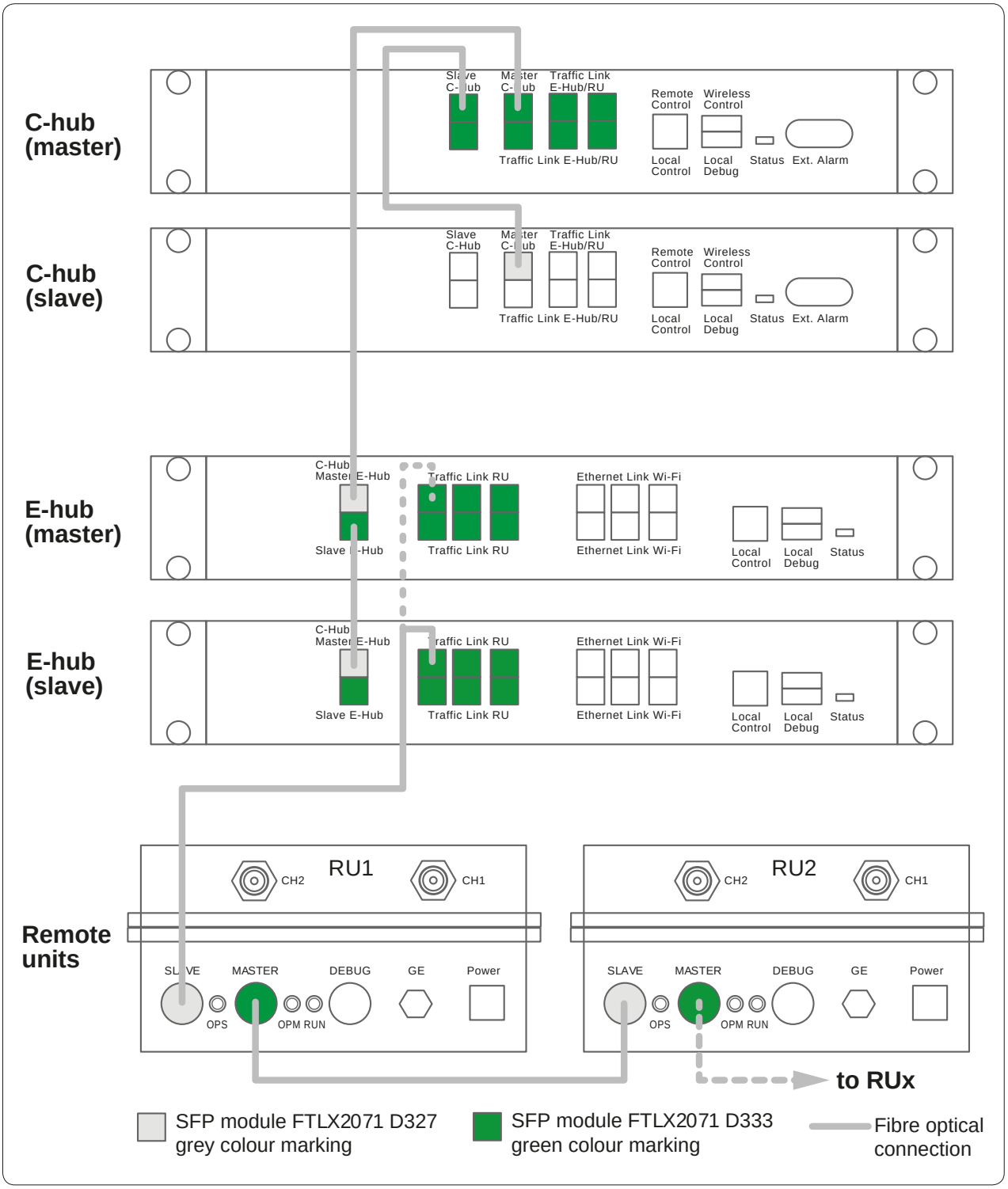

Fig. 35: Fibre optical cable layout

7.2.3 Cabling the Coaxial Connections

✓ The coaxial cables for connecting the BTS and the C-hub (via the load unit) are provided.

► Install the required coaxial connections. Fig. 36 gives an overview.

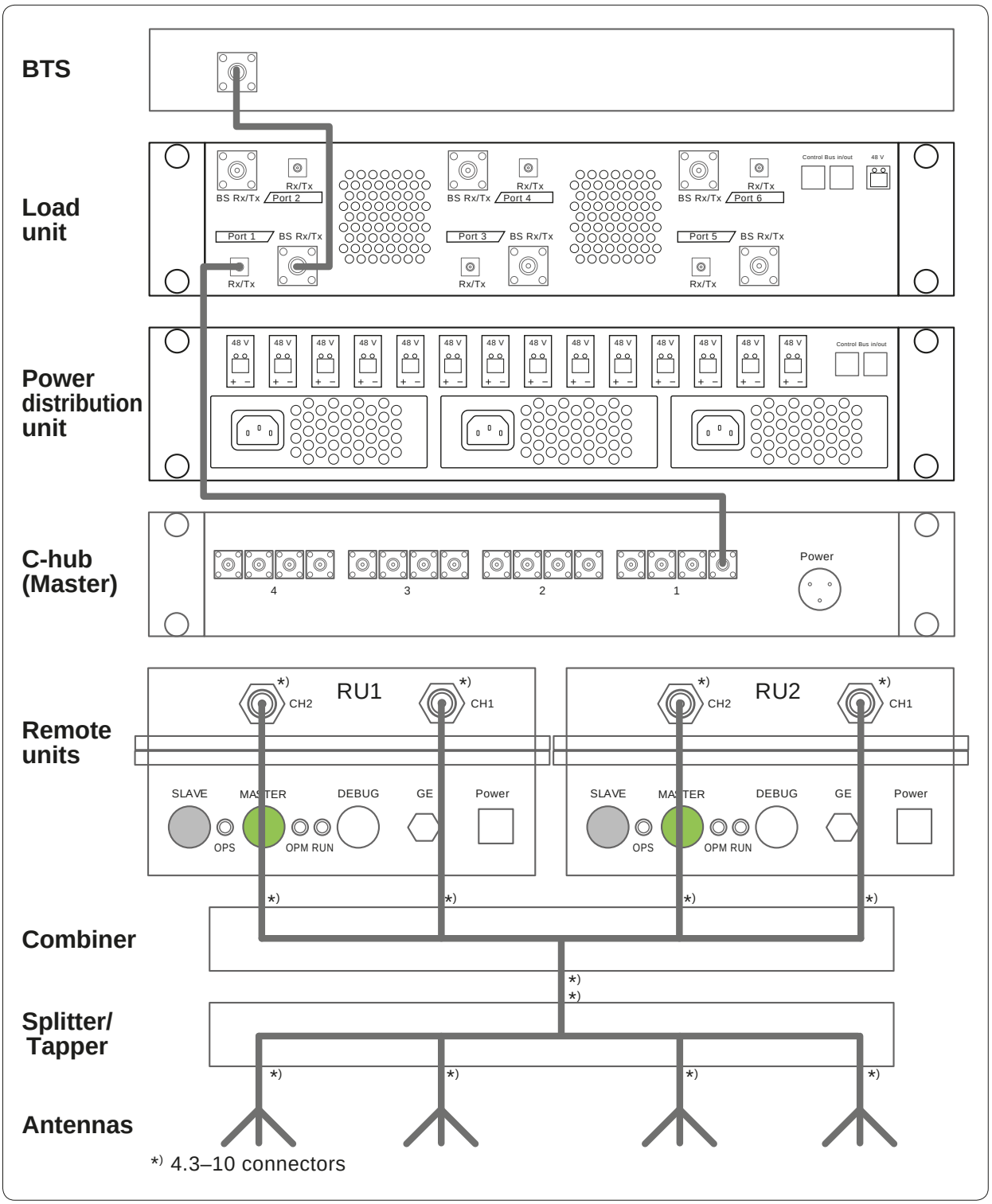

Fig. 36: Coaxial cable layout

7.2.4 Cabling the Power Supply

► Install the required power supply connections. Fig. 37 gives an overview.

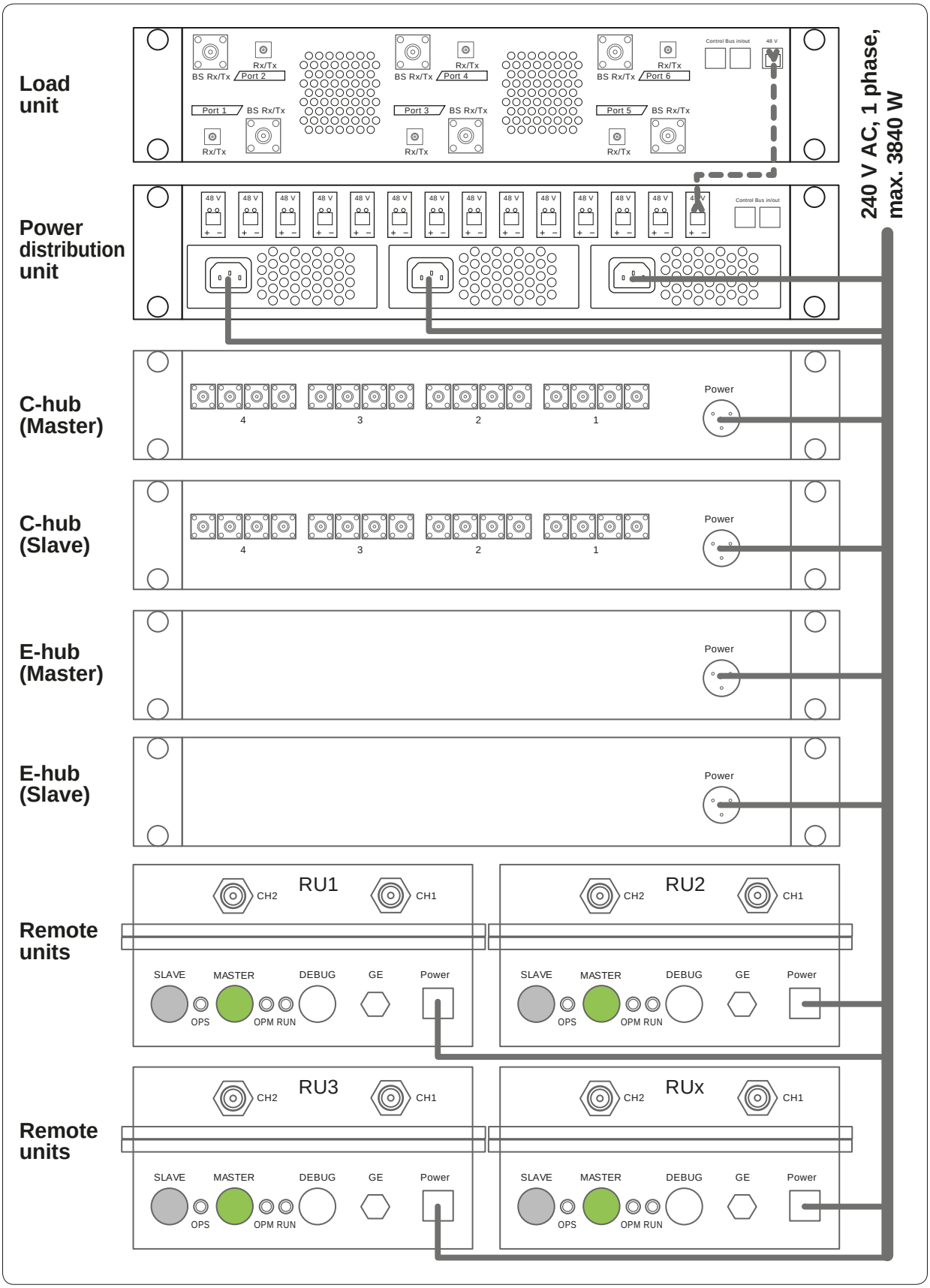

Fig. 37: Power supply cable layout

7.3 Helpful Hints for Cabling

7.3.1 Measuring Fibre Optic Cables

After cabling with fibre optic cables that have been assembled on site, it is necessary to check whether the fibre optic cables are still functioning. The purpose of this is to detect joints, for instance at plug connections, and damaged cables.

A. Using an OTDR measurement device[1)], check every fibre optic lead for reflection points. If necessary, use a lead-through fibre.

B. Save the measurement results in the measurement device.

C. If no faults were found in step A, measure the fibre optic power[2)] at the ends of the fibres and record these values.

D. Save the measurement results in the measurement device.

E. Transfer all the measurement results into a measurement report.

1) The details for operating the measurement device can be found in the operating instructions.

2) The performance must satisfy the required minimum level of the signal. See the data sheet for the components.

7.3.2 Replacing Defective Cables within a Rack

Defective cables connecting components within a rack must be replaced. This applies to all types of cable.

A. Slacken the cable ties.

B. Replace the defective cables.

C. Tighten the cable ties. When doing this, comply with the cabling rules in the document *K-BOW Cabling Guidelines*.

7.3.3 Repairing Defective Cables between Parts of the Building

Defective cables between buildings or between parts of a building[1)] must be professionally repaired and calibrated. An appropriate measurement report must be attached to the location documentation.

Caution

Risk of injury due to sharp edges of glass fibres.

► Close off the open ends of fibre optic cables with shrink sleeving, and shrink them by applying hot air.

1) e.g. hybrid cables, multi-fibre cables

8 System Documentation

It is suggested to store the system documentation in a document drawer in the main rack. The system documentation consists of the following documents:

Documents	Description	Special instructions
Floor plans	Describes the planned routing of all cables not within the racks; two examples are provided for each floor plan.	If the actual routing path differs from the planned routing path, the actual routing path must be marked in red pencil in both examples of the floor plans. Send one copy back to the planner; the other copy remains in the main rack and will later be replaced by a corrected copy.
Rack layout plan	Describes the position of components inside the rack	
Cable plan	Plan of the overall network cabling	
	Labelling of the cabling in the rack	
	Labelling of the cabling to the RUs	
K-BOW Safety Instructions	Safety instructions valid for the entire K-BOW System platform 2	

Tab. 2: Storage of the system documentation

9 Glossary

Abbreviation	Description
ADC	Analog to digital converter
AP	Access point
BTS	Base transceiver station
C-hub	Central hub
CB	Carrier bundle
CP	
DAC	Digital to analog converter
DDC	Digital down convert
DL	Downlink
DUC	Digital up convert
E-hub	Expansion hub
FDD	Frequency division duplexing
FPGA	Field programmable gate array
GSM	Global system for mobile communications
HPRU	High power remote unit
LTE	Long term evolution
NMS	Network management system
OMT	Operations and maintenance terminal
OP	Optical fibre
PA	Power amplifier
POI	Point of interface
RF	Radio frequency
RU	Remote unit
RX	Receiver
SNMP	Simple network management protocol
STP	Shielded twisted pair
TDD	Time division duplexing
TX	Transmitter
UL	Uplink
WCDMA	Wideband code division multiple access
WLAN	Wireless local area network

10 List of Diagrams

Fig. 1: Scope of delivery 16
Fig. 2: Example of a handover point for the BTS signals at a c-rail 18
Fig. 3: Example of a handover point for the BTS signals with individual loads with short patch cables at a c-rail 18
Fig. 4: Clearance Ⓐ above radiation fins of the installed devices 19
Fig. 5: Sliding rails Ⓑ 19
Fig. 6: Power distribution bar ① mounted on the left-hand traverse 25
Fig. 7: Plugs for power connection: ① is for red circuit, ② for black circuit 25
Fig. 8: Attaching a 19" mounting bracket 26
Fig. 9: Attached sliding rails Ⓑ 26
Fig. 10: Place C-hub in rack 26
Fig. 11: Fix C-hub with screws 27
Fig. 12: Connect power cable at rear side 27
Fig. 13: Connect ground cable at rear side 27
Fig. 14: Attaching a 19" mounting bracket 28
Fig. 15: Marking position of mounting holes 28
Fig. 16: Mounting completed 28
Fig. 17: Connect power cable at rear side 29
Fig. 18: Connect ground cable at rear side 29
Fig. 19: Attaching handle 30
Fig. 20: Attaching bracket Ⓐ 30
Fig. 21: Marking mounting holes for bracket Ⓑ 31
Fig. 22: Prepare expansion bolts for bracket Ⓑ 31
Fig. 23: Mounting accessories for bracket Ⓑ 31
Fig. 24: Bracket Ⓑ mounted 31
Fig. 25: Hook HPRU into bracket Ⓑ (①) and fix from top (②). 32
Fig. 26: HPRU fixed from top 32
Fig. 27: Fix HPRU from side 32
Fig. 28: Connect power cable at bottom side 33
Fig. 29: Connect ground cable at bottom side 33
Fig. 30: Interfaces at the C-hub front side 34
Fig. 31: Interfaces at the C-hub rear side 35
Fig. 32: Interfaces at the E-hub front side 36
Fig. 33: Interfaces at the E-hub rear side 37
Fig. 34: Interfaces at the HPRU connector side 38
Fig. 35: Fibre optical cable layout 40
Fig. 36: Coaxial cable layout 41
Fig. 37: Power supply cable layout 42

11 List of Tables

Tab. 1: Symbols and signal words 5
Tab. 2: Storage of the system documentation 44

936.5467/0.92/ICS/0417/GB I Subject to change Copyright © Kathrein Solutions GmbH 2017 All Rights Reserved Title: istock.com I derrek

KATHREIN Solutions GmbH
Anton-Kathrein-Straße 1 – 3
83004 Rosenheim, Germany
Phone +49 8031 184-0
www.kathrein.com I k-bow@kathrein.de

KATHREIN