L511A/L511AN_Hardware Design

LTE Cat1 Module

Version： V1.0.0

Date： 2024-01-31

Shanghai Mobiletek Communication Ltd

Notice

Some features of the product and its accessories described herein rely on the software installed, capacities and settings of local network, and therefore may not be activated or may be limited by local network operators or network service providers. Thus, the descriptions herein may not exactly match the product or its accessories which you purchase. Shanghai Mobiletek Communication Ltd reserves the right to change or modify any information or specifications contained in this manual without prior notice and without any liability.

Copyright

This document contains proprietary technical information which is the property of Shanghai Mobiletek Communication Ltd. copying of this document and giving it to others and the using or communication of the contents thereof, are forbidden without express authority. Offenders are liable to the payment of damages. All rights reserved in the event of grant of patent or the registration of a utility model or design. All specification supplied herein are subject to change without notice at any time.

DISCLAIMER

ALL CONTENTS OF THIS MANUAL ARE PROVIDED “AS IS”. EXCEPT AS REQUIRED BY APPLICABLE LAWS, NO WARRANTIES OF ANY KIND, EITHER EXPRESS OR IMPLIED, INCLUDINGBUT NOT LIMITED TO, THE IMPLIED WARRANTIES OF MERCHANTABILITY AND FITNESS FOR A PARTICULAR PURPOSE, ARE MADE IN RELATION TO THE ACCURACY, RELIABILITY OR CONTENTS OF THIS MANUAL.TO THE MAXIMUM EXTENT PERMITTED BY APPLICABLE LAW, IN NO EVENT SHALL SHANGHAI MOBILETEKCOMMUNICATION LTD BE LIABLE FOR ANY SPECIAL, INCIDENTAL, INDIRECT, OR CONSEQUENTIAL DAMAGES, OR LOSS OF PROFITS, BUSINESS, REVENUE, DATA, GOODWILL SAVINGS OR ANTICIPATED SAVINGS REGARDLESS OF WHETHER SUCH LOSSES ARE FORSEEABLE OR NOT.

Version History

Date	Version	Modify records	Author
2024-01-31	V1.0.0	Initial	rc.tian, rc.dong

Copyright © Shanghai Mobiletek Communication Ltd

CONTENT

1 Introduction 5
1.1 Hardware Diagram 5
1.2 Main Features 5
1.3 Specifications 7
1.4 Interfaces 7
1.5 Peripherals Features 7
1.6 Module Difference Comparison 8
2 Package Information 9
2.1 Pin Configuration 9
2.2 Pin Definition 10
2.3 Package Information 15
2.3.1 Dimensions 15
2.3.2 Product Labeling 16
2.3.3 Module Size 17
2.3.4 Recommend Pad 17
3 Interface Circuit Design 18
3.1 Power Section 18
3.1.1 Power Supply 18
3.1.2 Hardware Power On 21
3.1.3 Hardware Reset 21
3.2 (U)SIM Interface 22
3.2.1 Pin Description 22
3.2.2 (U)SIM Interface Application 22
3.3 USB Interface 24
3.3.1 Pin Description 24
3.3.2 Firmware Upgrade 25
3.4 UART Interface 25
3.4.1 Pin Description 25
3.4.2 UART Interface Application 26
3.5 Status Indication Interface 28
3.5.1 Network Indicator Control Circuit 28
3.5.2 Network Indication Pin State Description 28
3.6 I2C Interface 28
3.7 Interactive Application Interface 29
3.7.1 Pin Description 29
3.7.2 Interface Application 29
3.8 LCD Interface 30
3.9 Digital Audio Interface 30
3.10 ADC Interface 31
4 Electrical Characteristics 32

Copyright © Shanghai Mobiletek Communication Ltd

4.1 Electrical Characteristic 32
4.2 Temperature Characteristic 32
4.3 Absolute Maximum Power 33
4.4 Recommended Operating Conditions 33
4.5 Power Consumption 33
4.6 Power Sequence 35
4.7 Digital Interface Characteristics 35
4.8 ESD 36

5 RF Features 38

5.1 RF Main Features 38
5.2 Antenna Circuit Design 39
5.3 GNSS Introduction 40

6 Storage, Production and Package 43

6.1 Storage 43
6.2 Production 44
6.2.1 Module Confirmation and Moisture 44
6.2.2 SMT Reflow Attentions 45
6.2.3 SMT Stencil Design and the Problem of Less Tin Soldering 46
6.2.4 SMT Attentions 46
6.3 Packaging Information 48

7 Safety Information 49

1 Introduction

The L511A/L511AN module is a Cat1 module for LGA package, with stable and reliable performance. It can well meet customer's requirements for cost-effective, low-power applications. It suits to IoT areas, such as PoC, Mobile payment, security and alarm systems, on-board vehicle, DTU, asset tracking, sharing economy, etc.

1.1 Hardware Diagram

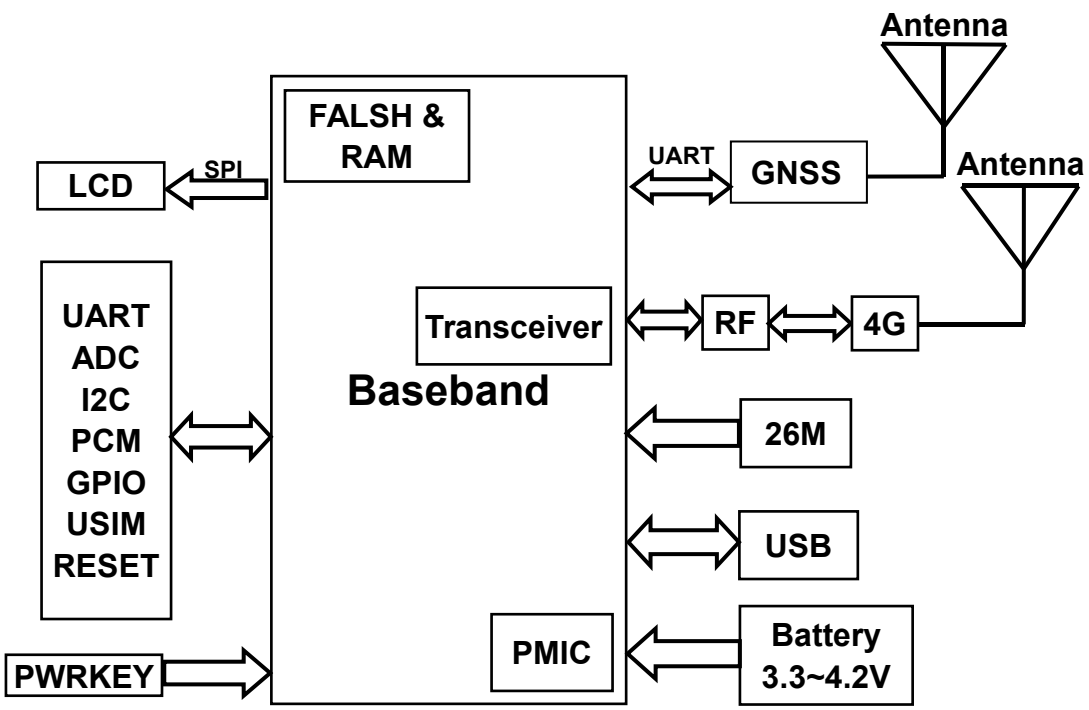

Figure 1.1-1 Functional Block Diagram

1.2 Main Features

- **CPU**

  ARM Cortex-M3@204MHz

- **Flash**

  L511A/L511AN: >1MB SRAM+4MB Nor Flash

- **Frequency bands**

  FDD-LTE: B2/B4/B5/B12/B13/B66/B71

- **Output Power**

  LTE: 23dBm±2dB

- **Sensitivity**

  Table 5.1-3

- **Data transmission**

  LTE-FDD: Max. DL 10Mbps, Max. UL 5Mbps

- **Power consumption**

  LTE Standby: TBD mA @3.8V/AT+ECPMUCFG=1,2

- **Built-in GNSS (L511AN supports GNSS function)**

  Support GPS/GLONASS/Galileo/BeiDou

  GNSS shut down by default, Open GNSS with AT command

  Receive Channel: 47 Channel

  Maximum Update Rate: 1Hz (Up to 10Hz)

  Tracking Sensitivity: -165dBm

  Recapture Sensitivity: -160dBm

  Cold Start Capture Sensitivity: -148dBm

  Cold Start TTFF: <25s

Copyright © Shanghai Mobiletek Communication Ltd

Hot Start TTFF: <1s

Positioning Accuracy: <2.5m CEP50

Speed: <0.1m/s

1.3 Specifications

- Supply Voltage Range: 3.3~4.2V (typ3.8V)
- Dimensions: 15.8mm * 17.7mm * 2.35mm
- 109-pin LGA
- Operation Temperature Range: -40°C~+85°C
- Storage Temperature Range: -45°C~+90°C
- Weight : About 1.3g

1.4 Interfaces

- GPIO
- USB2.0
- ADC
- PCM
- (U)SIM: Support 1.8V/3.0V
- UART
- Key
- Antenna

1.5 Peripherals Features

- LCD: SPI Interface 320*240

Copyright © Shanghai Mobiletek Communication Ltd

1.6 Module Difference Comparison

Table 1.6-1 L511A/L511AN Module Difference Comparison

Module	AUX_RXD/AUX_TXD	GNSS
L511A	YES	NO
L511AN	NO	YES

Copyright © Shanghai Mobiletek Communication Ltd

2 Package Information

2.1 Pin Configuration

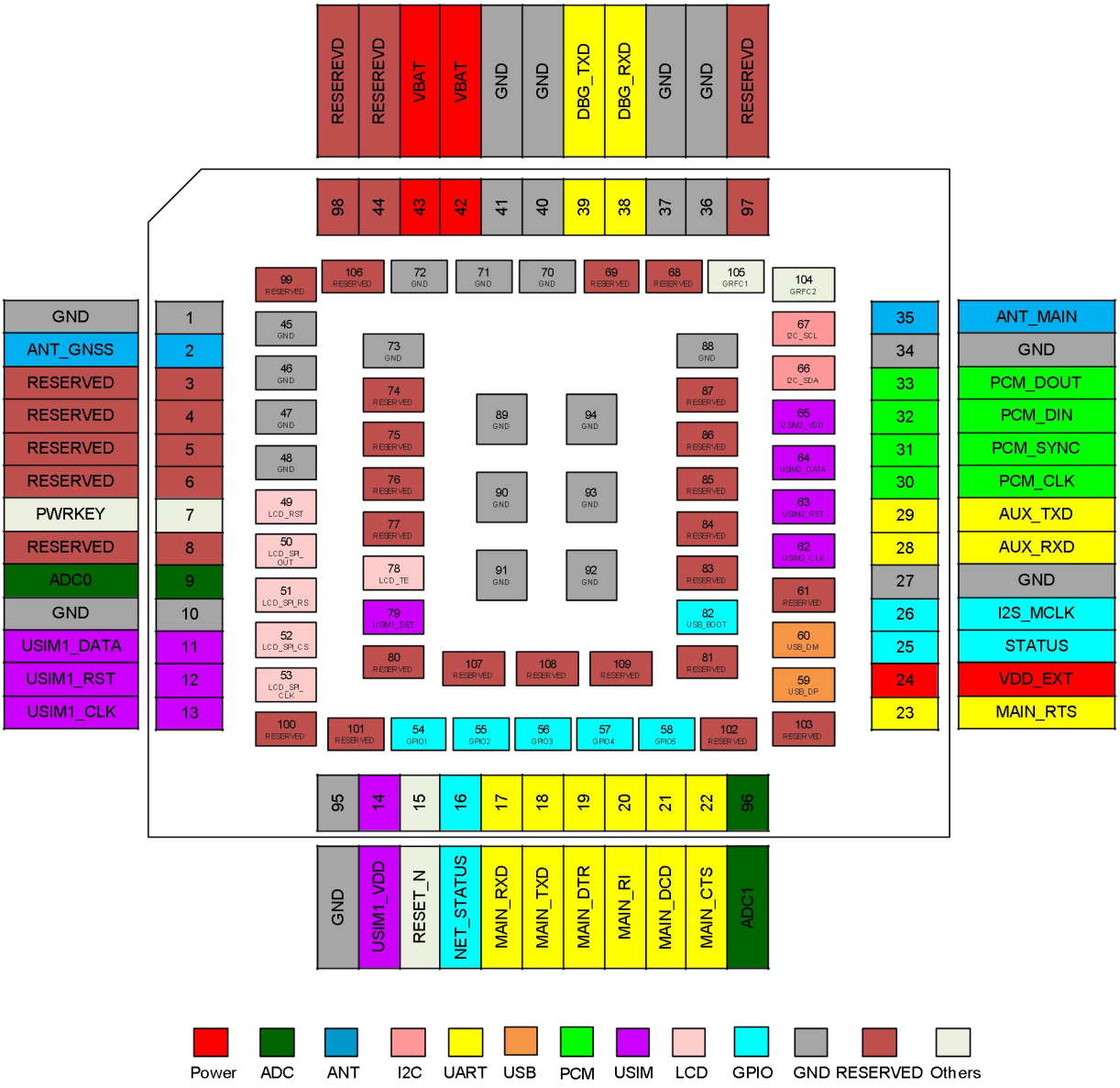

Figure 2.1-1 L511A/L511AN Pin (Top View)

2.2 Pin Definition

The L511A/L511AN module has a total of 109 pins, and the specific functions of the interfaces are as follows.

Table 2.2-1 L511A/L511AN Pin Description

Pin NO.	Pin name	Type	Function Description	Power Domain	State(1)
LCC PIN					
1.	GND	G	Ground	--	GND
2.	ANT_GNSS	ANT	GNSS Antenna		Open
3.	RESERVED	--	Not connect		
4.	RESERVED	--	Not connect		
5.	RESERVED	--	Not connect		
6.	RESERVED	--	Not connect		
7.	PWRKEY	DI	Power key button	1.8~2.3V	Open
8.	RESERVED	--	Not connect		
9.	ADC0	AI	ADC external input channel 0, 12bit	0.05~1.2V	Open
10.	GND	G	Ground	--	GND
11.	USIM1_DATA	DIO	USIM1 data	1.8V/3.0V	Open
12.	USIM1_RST	DO	USIM1 reset	1.8V/3.0V	Open
13.	USIM1_CLK	DO	USIM1 clock	1.8V/3.0V	Open
95.	GND	G	Ground	--	GND
14.	USIM1_VDD	PO	USIM1 output voltage	1.8V/3.0V	Open
15.	RESET_N	DI	System reset signal	1.25V	Open
16.	NET_STATUS	DO	Output PIN as LED control for network status	1.8V	Open
17.	MAIN_RXD	DI	Main UART receive data input	1.45V	Open

Copyright © Shanghai Mobiletek Communication Ltd

18.	MAIN_TXD	DO	Main UART transmit data output	1.8V	Open
19.	MAIN_DTR	DI	Main UART data terminal ready	1.2V	Open
20.	MAIN_RI	DO	Main UART ring indicator	1.8V	Open
21.	MAIN_DCD	DO	Main UART data carrier detect	1.8V	Open
22.	MAIN_CTS	DO	Main UART clear to send	1.8V	Open
96.	ADC1	AI	ADC1 external input channel , 12bit	0.05~1.2V	Open
23.	MAIN_RTS	DI	Main UART request to send	1.8V	Open
24.	VDD_EXT	PO	1.8V output voltage, output current up to 2mA	1.8V	Open
25.	STATUS	DO	Output PIN as operating status indicating of module	1.8V	Open
26.	I2S_MCLK	DO	I2S system clock	1.8V	Open
27.	GND	G	Ground	--	GND
28.	AUX_RXD	DI	Auxiliary UART receive data input	1.45V	Open
29.	AUX_TXD	DO	Auxiliary UART transmit data output	1.8V	Open
30.	PCM_CLK	DO	PCM interface clock	1.8V	Open
31.	PCM_SYNC	DO	PCM interface sync	1.8V	Open
32.	PCM_DIN	DI	PCM I/F data in	1.8V	Open
33.	PCM_DOUT	DO	PCM I/F data out	1.8V	Open
34.	GND	G	Ground	--	GND
35.	ANT_MAIN	ANT	Main Antenna		Open
97.	RESERVED	--	Not connect		
36.	GND	G	Ground	--	GND
37.	GND	G	Ground	--	GND
38.	DBG_RXD	DI	Debug UART receive data input	1.45V	Open
39.	DBG_TXD	DO	Debug UART transmit data output	1.8V	Open
40.	GND	G	Ground	--	GND

Copyright © Shanghai Mobiletek Communication Ltd

41.	GND	G	Ground	--	GND
42.	VBAT	PI	Power supply	3.3~4.2V	VBAT
43.	VBAT	PI	Power supply	3.3~4.2V	VBAT
44.	RESERVED	--	Not connect		
98.	RESERVED	--	Not connect		
LGA PIN					
45.	GND	G	Ground	--	GND
46.	GND	G	Ground	--	GND
47.	GND	G	Ground	--	GND
48.	GND	G	Ground	--	GND
49.	LCD_RST	DO	LCD RESET signal	1.8V	Open
50.	LCD_SPI_OUT	DO	LCD SPI Data out	1.8V	Open
51.	LCD_SPI_RS	DO	LCD SPI Data /command selection	1.8V	Open
52.	LCD_SPI_CS	DO	LCD SPI chip-select	1.8V	Open
53.	LCD_SPI_CLK	DO	LCD SPI clock	1.8V	Open
54.	GPIO1	I/O	General-purpose input/output	1.8V	Open
55.	GPIO2	I/O	General-purpose input/output	1.8V	Open
56.	GPIO3	I/O	General-purpose input/output	1.8V	Open
57.	GPIO4	I/O	General-purpose input/output	1.8V	Open
58.	GPIO5	I/O	General-purpose input/output	1.8V	Open
59.	USB_DP	IO	USB port differential data line		Open
60.	USB_DM	IO	USB port differential data line		Open
61.	RESERVED	--	Not connect		
62.	USIM2_CLK	DO	USIM2 clock	1.8V	Open
63.	USIM2_RST	DO	USIM2 reset	1.8V	Open
64.	USIM2_DATA	DIO	USIM2 data	1.8V	Open

Copyright © Shanghai Mobiletek Communication Ltd

65.	USIM2_VDD	PO	USIM2 output voltage	1.8V	Open
66.	I2C_SDA	I/O	I2C data	1.8V	Open
67.	I2C_SCL	O	I2C clock	1.8V	Open
68.	RESERVED	--	Not connect		
69.	RESERVED	--	Not connect		
70.	GND	G	Ground	--	GND
71.	GND	G	Ground	--	GND
72.	GND	G	Ground	--	GND
73.	GND	G	Ground	--	GND
74.	RESERVED	--	Not connect		
75.	RESERVED	--	Not connect		
76.	RESERVED	--	Not connect		
77.	RESERVED	--	Not connect		
78.	LCD_TE	DO	LCD tearing effect	1.8V	Open
79.	USIM1_DET	DI	USIM1 detect pin	1.2V	Open
80.	RESERVED	--	Not connect		
81.	RESERVED	--	Not connect		
82.	USB_BOOT	DI	Force software download	1.8V	Open
83.	RESERVED	--	Not connect		
84.	RESERVED	--	Not connect		
85.	RESERVED	--	Not connect		
86.	RESERVED	--	Not connect		
87.	RESERVED	--	Not connect		
88.	GND	G	Ground	--	GND
89.	GND	G	Ground	--	GND
90.	GND	G	Ground	--	GND

Copyright © Shanghai Mobiletek Communication Ltd

91.	GND	G	Ground	--	GND
92.	GND	G	Ground	--	GND
93.	GND	G	Ground	--	GND
94.	GND	G	Ground	--	GND
99.	RESERVED	--	Not connect		
100.	RESERVED	--	Not connect		
101.	RESERVED	--	Not connect		
102.	RESERVED	--	Not connect		
103.	RESERVED	--	Not connect		
104.	GRFC2	DO	Generic RF Control 2	1.8V	Open
105.	GRFC1	DO	Generic RF Control 1	1.8V	Open
106.	RESERVED	--	Not connect		
107.	RESERVED	--	Not connect		
108.	RESERVED	--	Not connect		
109.	RESERVED	--	Not connect		

(1) Suggested status when not in use.

Notes: 1. The PIN2 of L511A is reserved, and the L511AN supports GNSS function and PIN2 is ANT_GNSS.

2. The PIN28 and PIN29 of L511A can be used to connect to external devices. The PIN28 and PIN29 of L511AN are reserved pins and cannot be connected to any external devices.

3. The USB_BOOT (PIN82) pin must not be pulled up to high level before the module is successfully powered on.

4. The VDD_EXT can output 1.8V during sleep; the voltage domain of the remaining 1.8V/1.45V interfaces will be turned off when the module is asleep, while the voltage domain of the 1.2V interfaces can function normally when the module is asleep.

5. When the MAIN_RXD is enabled with the wake up function, the voltage domain of MAIN_RXD will change to 1.2V after the module is asleep.

Copyright © Shanghai Mobiletek Communication Ltd

Table 2.2-2 Pin Type Description

PI: POWER INPUT	PO: POWER OUTPUT
DI: DIGITAL INPUT	DO: DIGITAL OUTPUT
IO: INPUT OUTPUT	AI: ANALOG INPUT
ANT: ANTENNA	G: GROUND

2.3 Package Information

2.3.1 Dimensions

The L511A module mechanical dimensions are described as following figure (Top view, Side view, Back view).

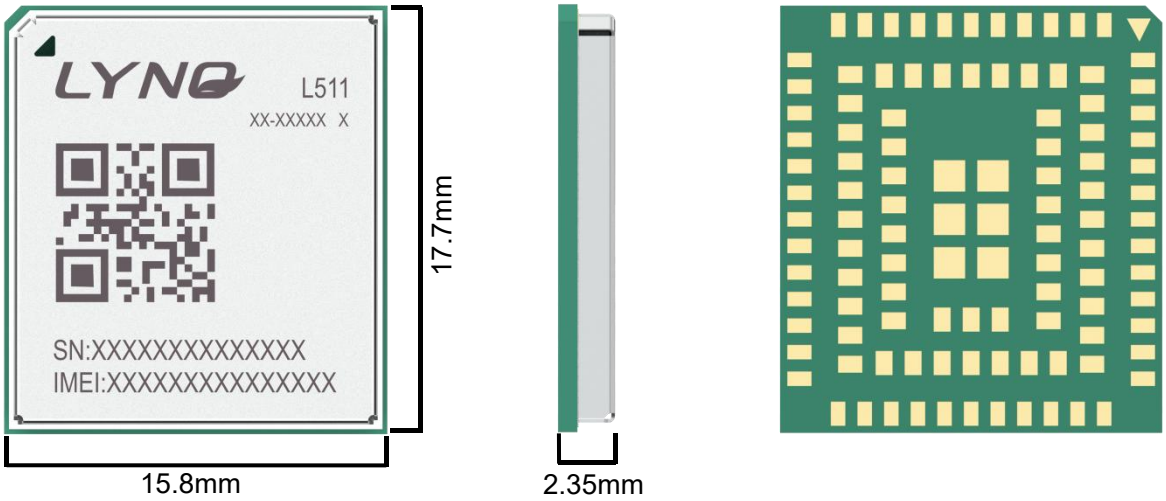

Figure 2.3.1-1 Mechanical Dimensions (Top view, Side view, Back view)

2.3.2 Product Labeling

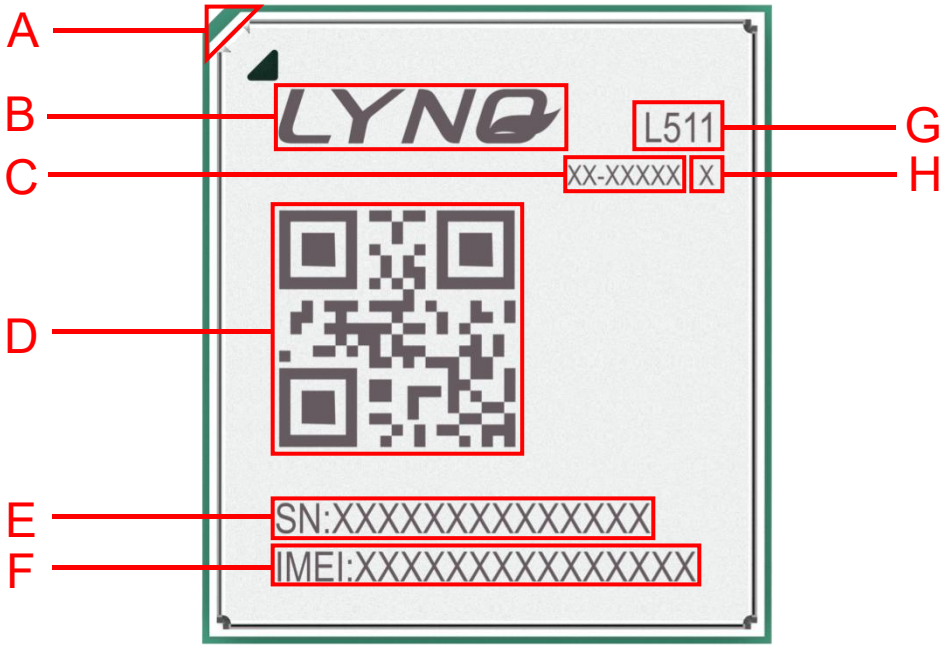

Figure 2.3.2-1 Label of the L511A/L511AN

Table 2.3.2-1 Description of Label

Item	Description
A	Pin1 mark
B	Logo of company
C	The finished part number of the module
D	QR code---including IMEI number and SN number
E	SN number
F	IMEI number
G	Module name
H	Module configuration

Copyright © Shanghai Mobiletek Communication Ltd

2.3.3 Module Size

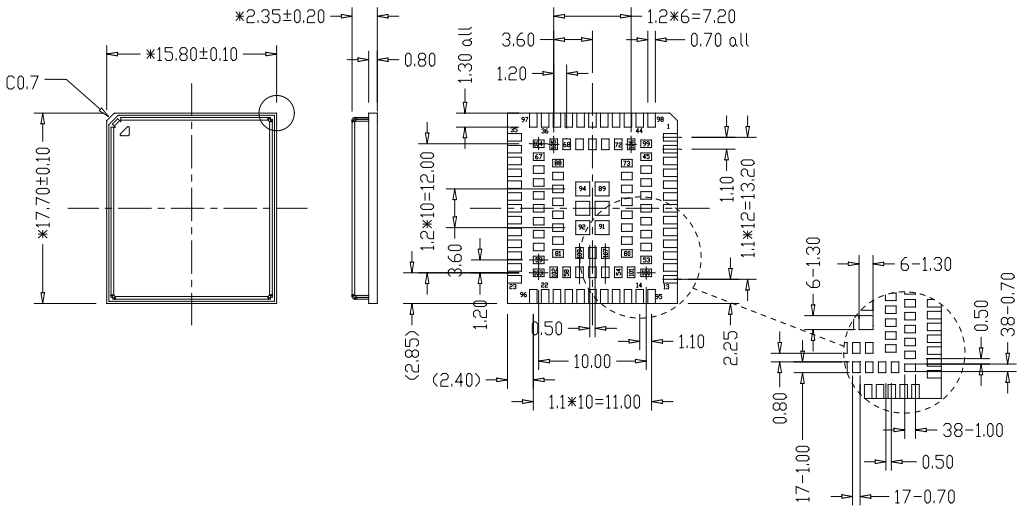

Figure 2.3.3-1 Module Size (Unit: mm)

2.3.4 Recommend Pad

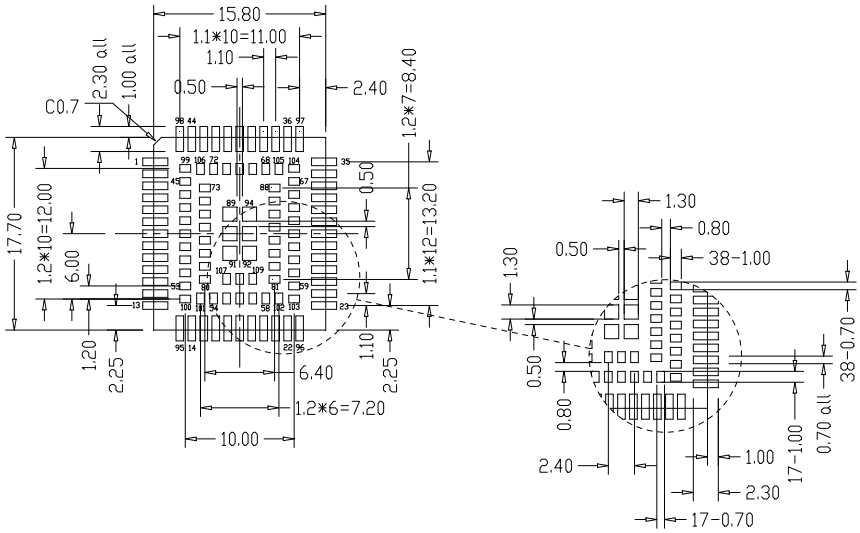

Figure 2.3.4-1 Recommend Pad (Top view, Unit: mm)

3 Interface Circuit Design

3.1 Power Section

3.1.1 Power Supply

VBAT is the main power supply of the module, its voltage input range is 3.3V to 4.2V, and the recommended voltage is 3.8V. In poor network environments, where the antenna emits at maximum power, the module must choose a power supply that can provide at least 1.2A current capability. A low ESR (ESR=0.7Ω) 100uF filter capacitor is recommended for the VBAT pin close to the module, and at the same time, it is recommended to add three (100nF, 33pF, 10pF) chip multilayer ceramic capacitors (MLCC) with the best ESR performance to VBAT respectively, and place the capacitors close to the VBAT pin. When connecting the module to an external power supply, VBAT requires star traces. The VBAT trace width should be no less than 1.2mm. In principle, the longer the VBAT trace, the wider the required trace width.

Considering various complex application scenarios of module, it is strongly recommended that module add TVS at VBAT to provide ESD/EOS protection for module power supply. It is recommended to choose V_{RWM}=4.7V and P_{PP}≥500W for TVS.

Copyright © Shanghai Mobiletek Communication Ltd

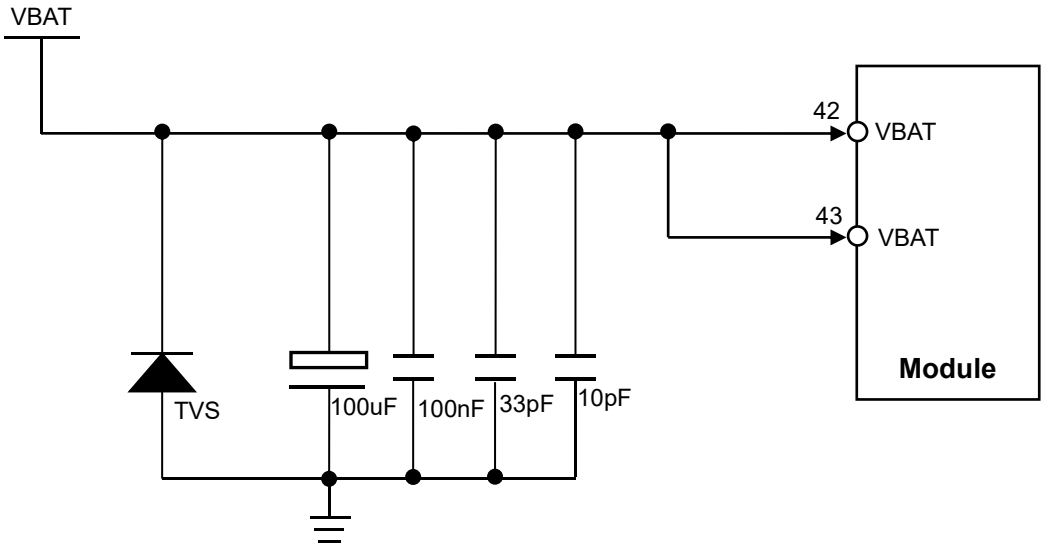

Figure 3.1.1-1 Power Supply Circuit

Notes: When the module has no network, the RTC clock error of the module is relatively large, there will be a few minutes of error in 24 hours. If you want to get accurate time, you need to synchronize the network time.

If the voltage drop is not large, it is recommended to use LDO. LDO requires over-current capacity of more than 1.2A, because LDO is a linear buck, its transient response capacity is poor, and the front and rear terminals need to be equipped with a large amount of capacitance, to prevent high-power transmission when the voltage fluctuation is too large, may lead to reset or shutdown. The output voltage needs to be controlled at 3.8V.

Copyright © Shanghai Mobiletek Communication Ltd

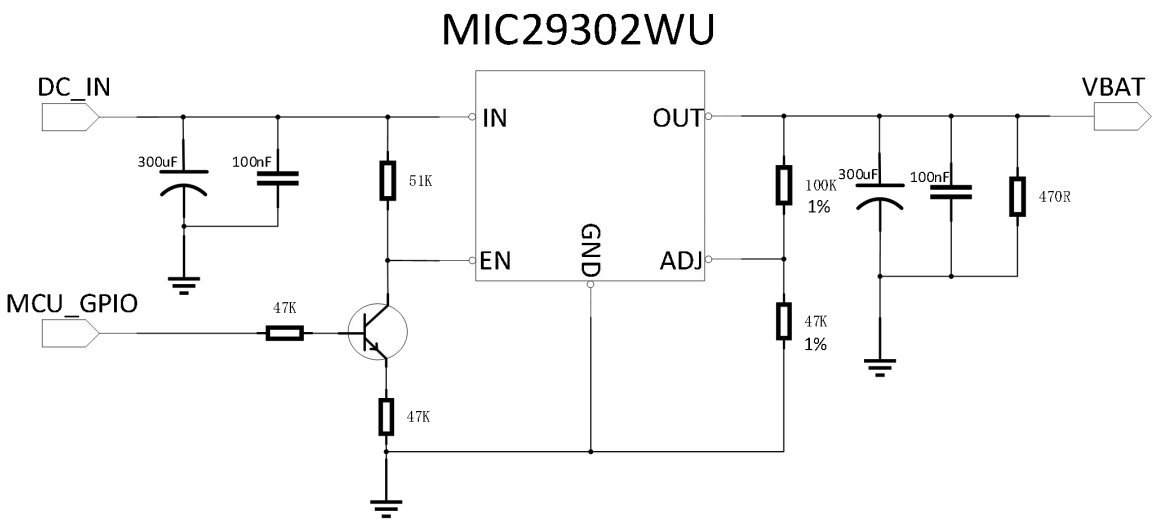

Figure 3.1.1-2 LDO Power Supply Circuit

If the voltage drop is large, it is recommended to use DC/DC, the output current requirements of more than 1.2A, such as Figure 3.1.1-3 using DC/DC switching power supply, supplemented by a large capacity (more than 330uF) , to ensure the normal operation of RF PA (power amplifier). The advantage of the reference design is that it can provide better transient current response, meet the working requirement of the module under the weak signal, and prevent the network drop or port restart caused by power shortage.

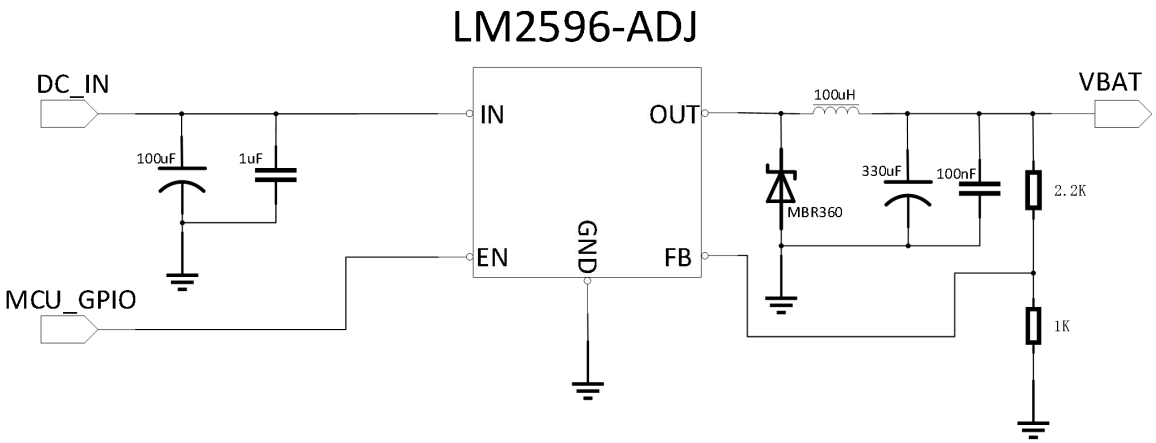

Figure 3.1.1-3 DC/DC Power Supply Circuit

3.1.2 Hardware Power On

Module 7-pin is the Power on key. Pulling down the PWRKEY at least 1s and then releasing, the module will boot. It is internally pull-up to 1.8V to 2.2V, and does not need to pull up externally.

There are two ways to shut down the module: 1. Use the AT command AT+POWEROFF to shut down the module and the shut down process takes about 3s to complete; 2. Pull down PWRKEY for more than 3s and then release to shut down.

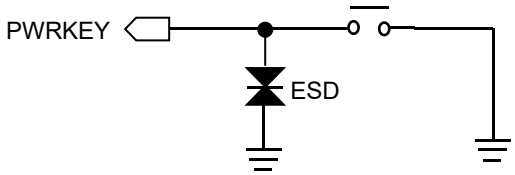

Figure 3.1.2-1 Turn On Circuit

Notes: PWRKEY can be pulled down to the ground through a 0R resistor to achieve power-on and boot.

3.1.3 Hardware Reset

Module 15-pin is the hardware reset input. The module will reset hardware when it receives a 1s low level signal. It is internally pull-up to 1.25V, and does not need to pull up externally. RESET_N can be directly connected to the 1.8V~3.3V port of MCU. The module will not restart after reset.

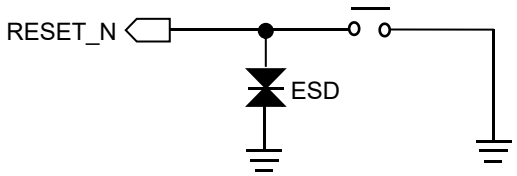

Figure 3.1.3-1 System Reset

Copyright © Shanghai Mobiletek Communication Ltd

3.2 (U)SIM Interface

3.2.1 Pin Description

The L511A/L511AN module supports dual (U)SIM cards single standby. Module's (U)SIM1 card (pin number: 11, 12, 13, 14) supports and can automatically detect 1.8V and 3.0V (U)SIM cards, (U)SIM2 card (pin number: 62, 63, 64, 65) only supports detecting 1.8V (U)SIM card.

The (U)SIM card interface signals are shown in Table 3.2.1-1.

Table 3.2.1-1 USIM Pin Description

Pin No.	Pin Name	Signal Description	Further Description
11	USIM1_DATA	(U)SIM1 card data pin	(U)SIM1 card data signal, two-way signal
12	USIM1_RST	(U)SIM1 card reset pin	(U)SIM1 card reset signal, output by the module
13	USIM1_CLK	(U)SIM1 card clock pin	(U)SIM1 card clock signal, output by the module
14	USIM1_VDD	(U)SIM1 card power	(U)SIM1 card power supply, output by the module
79	USIM1_DET	(U)SIM1 card hot-plug detection pin	(U)SIM1 card hot plug detection signal, input signal
62	USIM2_CLK	(U)SIM2 card clock pin	(U)SIM2 card clock signal, output by the module
63	USIM2_RST	(U)SIM2 card reset pin	(U)SIM2 card reset signal, output by the module
64	USIM2_DATA	(U)SIM2 card data pin	(U)SIM2 card data signal, two-way signal
65	USIM2_VDD	(U)SIM2 card power	(U)SIM2 card power supply, output by the module

3.2.2 (U)SIM Interface Application

The (U)SIM1 card signal group (pin numbers: 11, 12, 13, 14) and the (U)SIM2 card signal group (pin numbers: 62, 63, 64, 65), on the line near the (U)SIM card seat, please note the need to add ESD protection devices when designing.

Copyright © Shanghai Mobiletek Communication Ltd

In order to meet the requirements of 3GPP TS 27.005 protocol and EMC certification, the proposed (U)SIM card is arranged near the module (U)SIM card interface, and avoid to layout too long resulting in serious waveform distortion, affecting the signal integrity. USIM_CLK and USIM_DATA signals are recommended to be protected. Paralleling a 1uF capacitor between GND and USIM_VDD, it can filter out the interference of radio frequency signals.

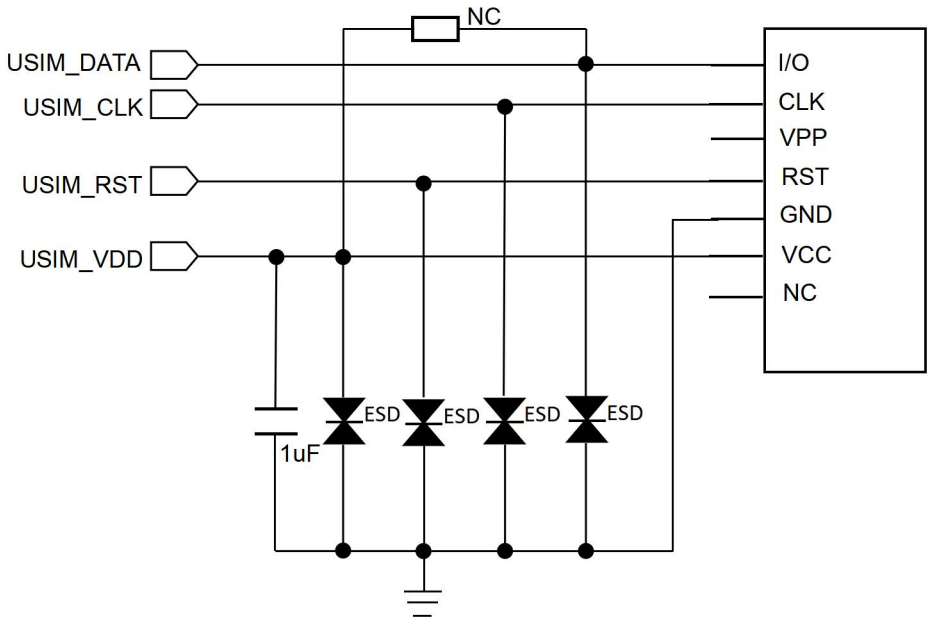

Figure 3.2.2- 1 (U)SIM Circuit

Notes: The ESD device capacitance is recommended to be less than 22pF. If you want to use the (U)SIM card hot swap function, you need to choose a (U)SIM card holder with a hot swap detection PIN.

3.3 USB Interface

3.3.1 Pin Description

The USB interface conforms to the USB2.0 specification and electrical characteristics. It supports full-speed and high-speed modes. The data exchange between the main processor (AP) and the module is mainly completed through the USB interface. The module's USB only supports slave mode.

The USB is mainly used for data transmission, firmware update, module program testing and send AT command. The USB_DM/DP differential impedance need to be controlled at 90ohm ±10%, and it should be protected up and down, and can't be crossed with other lines. The ESD device capacitance on USB_DM/DP is recommended to be less than 3pF. USB circuit is as follow.

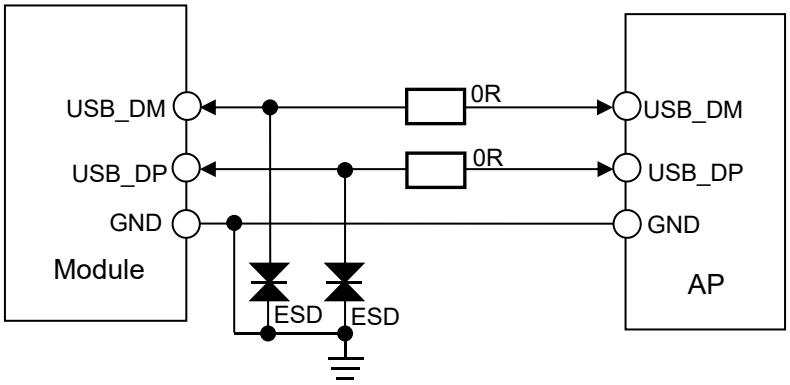

Figure 3.3.2- 1 USB Application Circuit

Notes: If you use the serial port communication, the USB_DM/DP reserved test points respectively in order to firmware update. If USB_DM/DP is used to communicate with the MCU, the position of the USB_DM/DP signal near the module needs to reserve a test point and the USB_DM/DP requires a series 0R resistor. The resistor is placed near the module and the test point is placed between module and resistor.

Copyright © Shanghai Mobiletek Communication Ltd

3.3.2 Firmware Upgrade

The L511A/L511AN module can use the USB interface or MAIN_UART interface to upgrade the firmware. The L511A module requires the module to enter the forced download mode when updating the firmware through the USB interface. When USB_BOOT (PIN82) is detected to be high level during module startup, the module enter USB download mode. The circuit of the USB_BOOT interface is as follow.

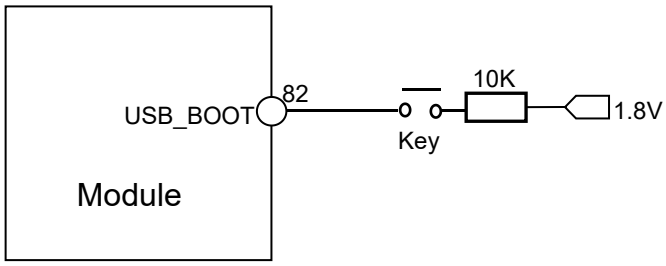

Figure 3.3.2-1 The USB_BOOT Circuit

3.4 UART Interface

3.4.1 Pin Description

The L511A module provides three UART serial communication interfaces: MAIN_UART can be used as complete non-synchronous communication interface, supporting standard modem handshake signal control and in compliance with the RS-232 interface protocol, also supporting 4-wire serial bus interface or 2-wire serial bus interface mode. DBG_UART is used as a debug port of the L511A module. The AUX_UART can be used to connect peripherals. The L511AN module only provides two UART serial communication interfaces, namely MAIN_UART and DBG_UART.

The three groups of UART port support programmable data width, stop bits, and parity bits, with separate TX and RX FIFOs. The MAIN_UART supports 600bps, 1200bps, 2400bps, 4800bps, 9600bps, 19200bps, 38400bps, 57600bps, 115200bps, 230400bps, and 460800bps baud rates, and the default is 115200bps. This interface is used for AT command communication and data transmission. The DBG_UART supports 3Mbps baud rate for partial log output.

Copyright © Shanghai Mobiletek Communication Ltd

The pin signal definitions are shown in Table 3.4.1-1.

Table 3.4.1-1 UART Pin Description

Pin No.	Pin Name	I/O type	Functional Description
17	MAIN_RXD	DI	Main UART receive data input
18	MAIN_TXD	DO	Main UART transmit data output
19	MAIN_DTR	DI	Main UART Data terminal ready (wake up module)
20	MAIN_RI	DO	Main UART ring indicator.
21	MAIN_DCD	DO	Main UART data carrier detect
22	MAIN_CTS	DO	Main UART clear to send
23	MAIN_RTS	DI	Main UART request to send
28	AUX_RXD	DI	Auxiliary UART receive data input
29	AUX_TXD	DO	Auxiliary UART transmit data output
38	DBG_RXD	DI	Debug UART receive data input
39	DBG_TXD	DO	Debug UART transmit data output

3.4.2 UART Interface Application

If used MAIN_UART in communication between the module and application processor, and the level is 1.8V, the connection mode is shown in Figure 3.4.2-1 and Figure 3.4.2-2. You can use the complete RS232 mode, 4 wires or 2 wires mode connection. Module interface level is 1.8V. If the AP interface level does not match, you must increase the level conversion circuit, as shown in Figure 3.4.2-3.

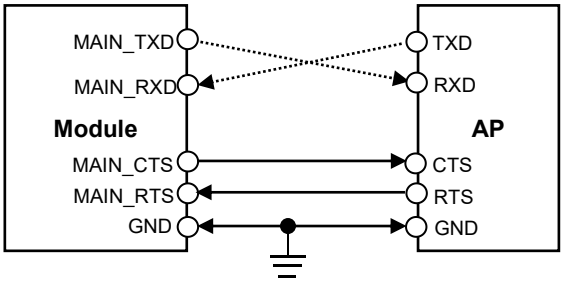

Figure 3.4.2-1 Connect to AP method (4lines)

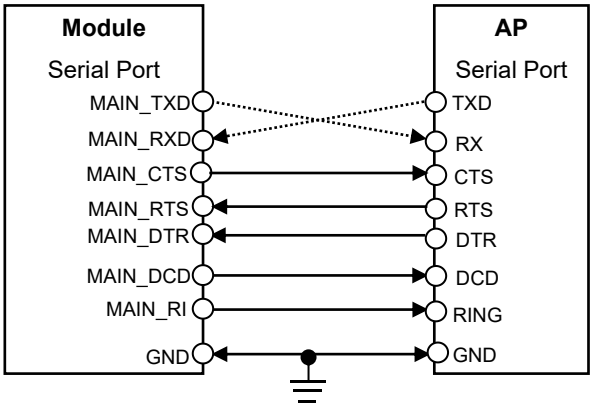

Figure 3.4.2-2 Connect to AP method

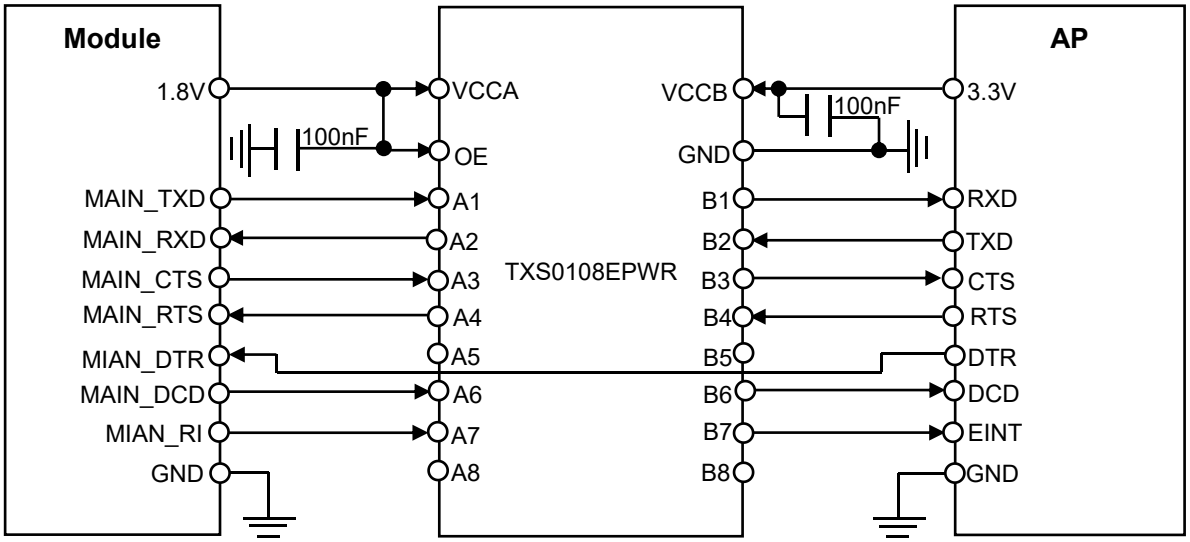

Figure 3.4.2-3 Level Conversion Circuit

Notes: MAIN_DTR can be directly connected to the 1.8V~3.3V port of MCU. MAIN_ DTR suggests reserving 20K pull-up resistor to 1.8V to 3.3V. MAIN_RXD recommend adding 10K resistor pull-up to 1.8V. When the UART of module matches the AP level, MAIN_TXD recommends adding 10K resistor pull-up to 1.8V.

3.5 Status Indication Interface

3.5.1 Network Indicator Control Circuit

The module has a NET_STATUS pin. The reference circuit is shown in Figure 3.5.1-1.

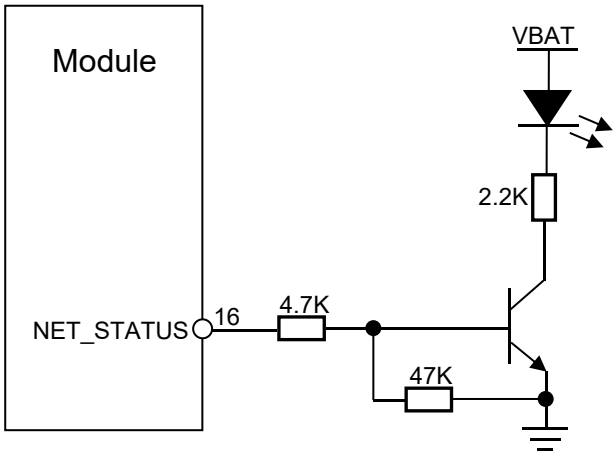

Figure 3.5.1-1 NET_STATUS Circuit

3.5.2 Network Indication Pin State Description

The logic level changes of NET_STATUS (PIN16) in different network states are shown in Table 3.5.2-1.

Table 3.5.2-1 Network Status

LED Status	Module Status
OFF	Power off
64ms ON/800ms OFF	Shut down network
64ms ON/3000 ms OFF	Registered network

3.6 I2C Interface

The L511A/L511AN module provides one group of I2C interfaces. This I2C can communicate with peripherals (such as sensor or Codec and so on) through the I2C interface.

Table 3.6-1 I2C Interface Description

Pin NO.	Pin Name	Mode	Notes
66	I2C2_SDA	100KHz/400KHz	Need to add a pull-up resistor to 1.8V externally, the resistor is recommended to use 4.7K
67	I2C2_SCL		

3.7 Interactive Application Interface

3.7.1 Pin Description

The L511A/L511AN module provides a variety of interfaces for interacting with the application processor, including WAKEUP (WAKEUP includes MAIN_DTR and MAIN_RI) and STATUS.

Table 3.7.1-1 Interactive Application Interface

Pin NO.	Pin Name	I/O Type	Function Description
19	MAIN_DTR	DI	AP wakes up module
20	MAIN_RI	DO	Module wakes up AP
25	STATUS	DO	AP query module status

3.7.2 Interface Application

The L511A/L511AN module provides direct interactive signals to communicate with the AP.

- MAIN_DTR: After the module enters sleep, the host can wake up the module by pulling down this signal. After the host pulls the signal high, the module is allowed to enter sleep. MAIN_DTR can be directly connected to the 1.8V~3.3V port of MCU.

- MAIN_RI: When the module has an event and needs to communicate with the AP, the module can wake up the AP by setting this pin to low level (Low level will last 120ms).

Copyright © Shanghai Mobiletek Communication Ltd

- STATUS: Module status query. Low level indicates power-off state or power-on initialization state, and high level indicates power-on state.

3.8 LCD Interface

The L511A/L511AN module supports LCD function and only support SPI interface. It can provide 3-wire/4-wire SPI interface for data transmission, and the supported resolution can reach 320*240. LCD_SPI_CLK can support up to 25.6MHz. The interface modes of LCD are shown in Table 3.8-1.

Table 3.8-1 LCD_SPI Interface

Mode	LCD_CS	LCD_SPI_CLK	LCD_SPI_DOUT	LCD_SPI_RS
3-wire 9bit mode	●	●	●	/
4-wire 8bit mode	●	●	●	●

3.9 Digital Audio Interface

The L511A/L511AN module provides a digital audio interface (PCM) which can be used as the PCM master device to transmit digital voice signals. During use, the L511A/L511AN module is used as the master device to connect an external codec. PCM_SYNC, PCM_CLK are used as output pins.

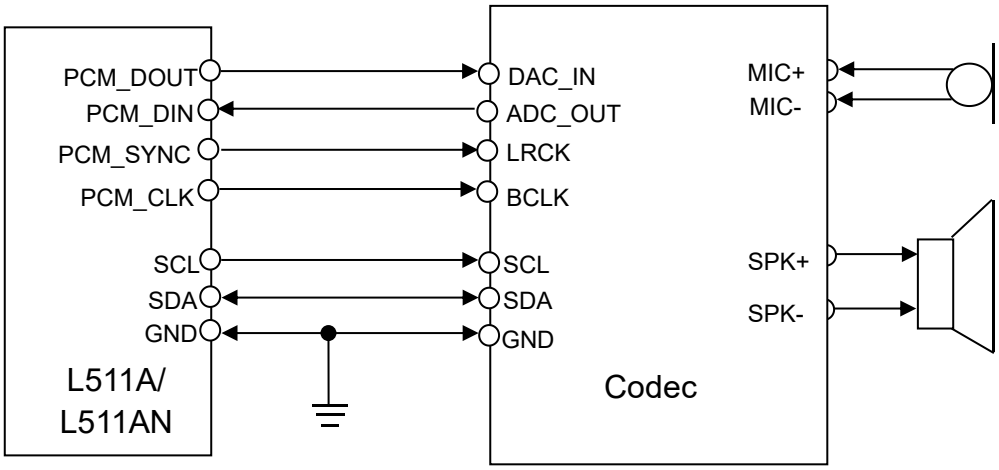

Figure 3.5.1-1 PCM Application Circuit (L511A/L511AN module as PCM master device)

Notes: It is recommended to reserve an RC (R=22R, C=22pF) circuit on the signal line of PCM, especially on the PCM_CLK pin.

3.10 ADC Interface

The module provides two ADC for detecting light-sensitive resistors or other devices that require ADC detection. The module supports 12-bit accuracy and the Max voltage of ADC is 1.2V.

Table 3.10-1 ADC Characteristics

Characteristics	Min.	Typ.	Max.	Unit
Input voltage range	0.05		1.2	V

4 Electrical Characteristics

4.1 Electrical Characteristic

Table 4.1-1 Electrical Characteristic

Parameter	Min.	Nom.	Max.	Unit
VBAT	3.3	3.8	4.2	V
Peak current	-	-	1.2	A

Notes: The over-low voltage can't power on the module. Over-high voltage may be danger to damage the module.

4.2 Temperature Characteristic

Table 4.2-1 Temperature Characteristic

State	Min.	Nom.	Max.	Unit
Working	-40	+25	+85	°C
Storage	-45	+25	+90	°C

Notes: When the temperature is over the range, the RF performance may be dropped. It also may cause power down or restart problem.

Copyright © Shanghai Mobiletek Communication Ltd

4.3 Absolute Maximum Power

Table 4.3-1 Absolute Maximum Power Rating

Pin name	Description	Min.	Typ.	Max.	Unit
VDD_EXT	Digital power for IO	-0.3	1.8	2	V
RESET_N	System reset signal	-0.3		3.6	V
VBAT	Power supply	-0.3		5	V

4.4 Recommended Operating Conditions

Table 4.4-1 Recommended Operating Range

Pin name	Description	Min.	Typ.	Max.	Unit
VDD_EXT	Digital power for IO	1.75	1.8	1.85	V

4.5 Power Consumption

Table 4.5-1 Power Consumption

Parameter	Conditions	Min.	Average	Max.	Unit
Power off mode	VBAT=3.8V		1		uA
Flight mode	VBAT=3.8V/AT+CFUN=0, AT+ECPMUCFG=1,1		3.9		mA
Sleep1	VBAT=3.8V/AT+CFUN=0, AT+ECPMUCFG=1,2		TBD		uA
Sleep2	VBAT=3.8V/AT+CFUN=0, AT+ECPMUCFG=1,3		TBD		uA
Hibernate	VBAT=3.8V/AT+CFUN=0, AT+ECPMUCFG=1,4		TBD		uA
LTE Standby	VBAT=3.8V/AT+ECPMUCFG=1,2	-	TBD		mA

Copyright © Shanghai Mobiletek Communication Ltd

Peak current	VBAT=3.8V			1.2	A

Notes: The test value of power consumption is the value tested in laboratory condition.

Table 4.5-2 Module Working mode Description

Operation Mode	Description	Notes
Flight mode	CPU is in IDLE mode, VDD_EXT output 1.8V	
Sleep1	VDD_EXT output 1.8V, 16KB cache Operation, 1MB SRAM Operation	It can be waked up by MAIN_DTR (need to send AT+QSCLK=1 to pull up the interface to wake up)
Sleep2	VDD_EXT output 1.8V, 16KB cache Operation, 1MB SRAM OFF	

Copyright © Shanghai Mobiletek Communication Ltd

4.6 Power Sequence

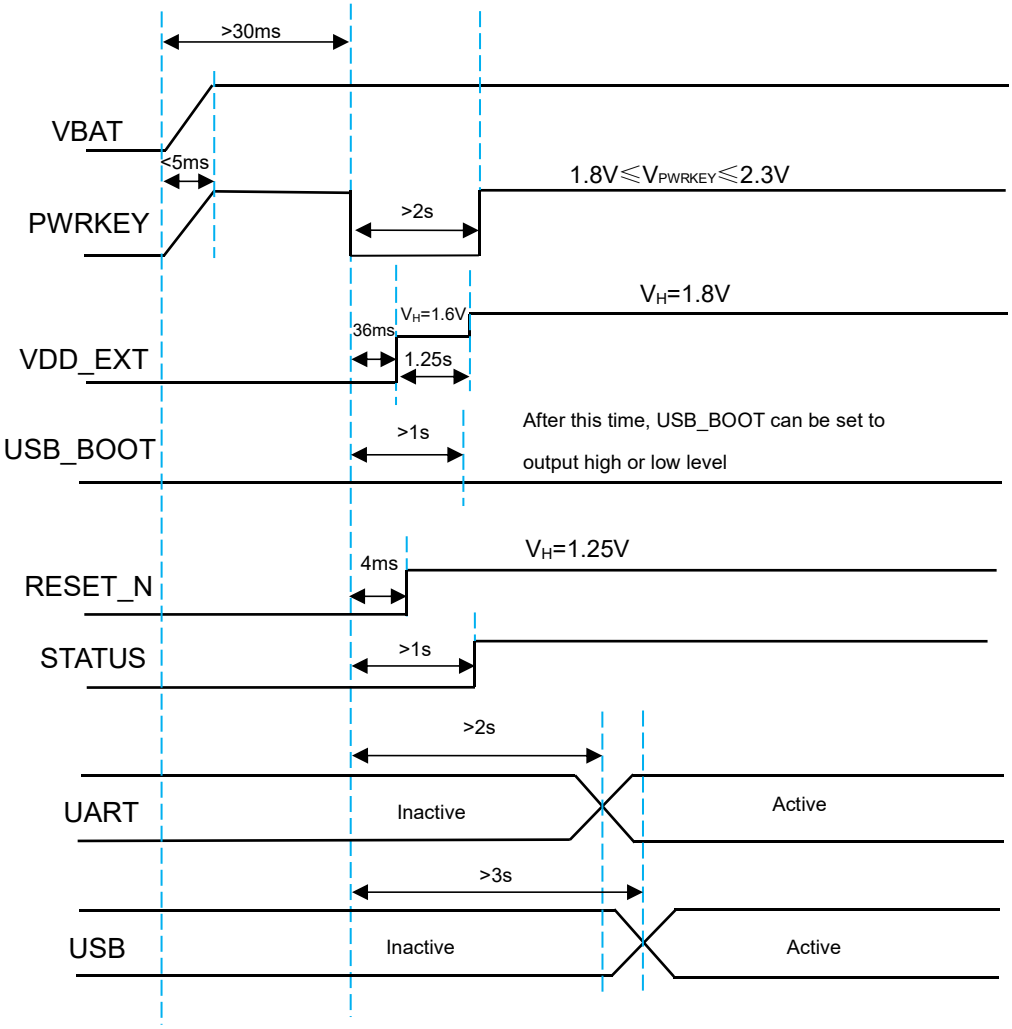

Figure 4.6-1 Power Sequence Diagram

4.7 Digital Interface Characteristics

Table 4.7-1 Digital IO Voltage

Parameter	Description	Min.	Typical	Max.	Unit
VIH	High-level input voltage	0.7*VDD_EXT	1.8	1.85	V
VIL	Low-level input voltage	0	-	0.2*VDD_EXT	V
VOH	High-level output voltage	0.8*VDD_EXT	1.8	1.85	V

Copyright © Shanghai Mobiletek Communication Ltd

VOL	Low-level output voltage	0	-	0.15*VDD_EXT	V

Notes: Suit to all GPIO, UART interfaces.

4.8 ESD

The module contains high sensitive electronic and is an electrostatic Sensitive Device. More attentions should be paid to the procedure of handing and packaging. The ESD test results are shown in the following table.

ESD parameter（Tem: 25°C，humidity: 45%）

Table 4.8-1 ESD Performance

Pin Name	Contact Discharge	Air Discharge
VBAT	±5KV	±10KV
GND	±5KV	±10KV
ANT	±5KV	±10KV

Enhanced ESD performance method:

1. If a converted board is added, it should have enough GND pins and be equally distributed. And the Layout of GND should be enough wide.

2. Key (Power key, USB_BOOT key and RESET_N key) need to add ESD device. Reset key line can't be near the edge of the board.

3. UART and other plug connector need to add ESD devices, and the other control lines from the outside of the machine also need to add ESD devices.

Copyright © Shanghai Mobiletek Communication Ltd

4. (U)SIM card should be added ESD protect.

5. External antenna, please add ESD device, ESD C_{pf}<0.1pF.

Notes: For ESD protect, please add ESD methods according to upper ways.

ESD components include varistors and TVS. For better performance, please use TVS.

Please pay attention to the selection of voltage range for ESD/TVS on the power supply.

Copyright © Shanghai Mobiletek Communication Ltd

5 RF Features

5.1 RF Main Features

a) Support FDD Cat1;

b) Support LTE bands include band B2/B4/B5/B12/B13/B66/B71.

The operating frequency range of the product is shown in table 5.1-1.

Table 5.1-1 Frequency Band

Band	Uplink band	Downlink band
FDD Band2	1850MHz~1910MHz	1930MHz~1990MHz
FDD Band4	1710MHz~1755MHz	2110 MHz~2155 MHz
FDD Band5	824MHz~849MHz	869MHz~894MHz
FDD Band12	699MHz~716MHz	729MHz~746MHz
FDD Band13	777MHz~787MHz	746MHz~756MHz
FDD Band66	1710MHz~1780MHz	2110MHz~2180MHz
FDD Band71	663MHz~698MHz	617MHz~652MHz

Table 5.1-2 Receive Sensitivity

Band	REF SENS @10MHz (Total)
FDD Band2	≤-94.3dBm
FDD Band4	≤-96.3dBm
FDD Band5	≤-94.3dBm
FDD Band12	≤-93.3dBm

Copyright © Shanghai Mobiletek Communication Ltd

FDD Band13	≤-93.3dBm
FDD Band66	≤-95.8dBm
FDD Band71	≤-93.5dBm

5.2 Antenna Circuit Design

The connecting part of the RF antenna supports the PAD form. The connection between the module and the main board antenna interface is required to be welded and connected through a microstrip line or a strip line. The microstrip line or strip line is designed according to the characteristic impedance of 50ohm, and the length of the wire is less than 10mm. Reserved Π matching network.

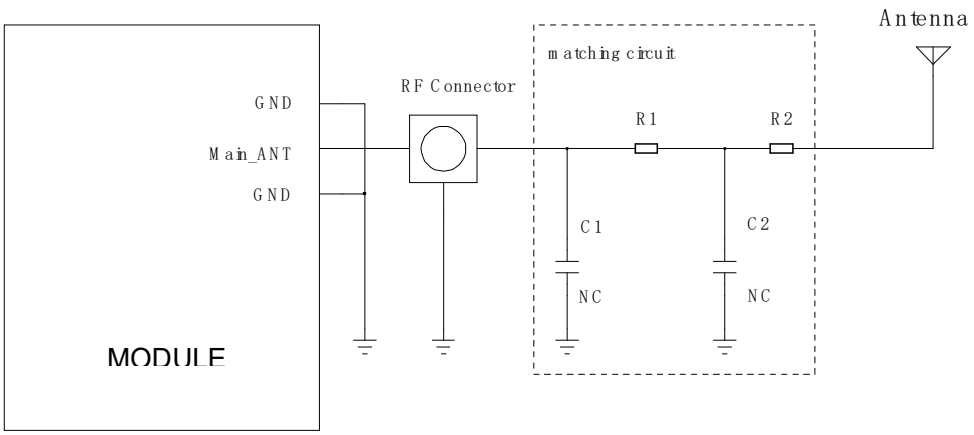

Figure 5.2-1 Antenna Matching Circuit Schematic

Figure R1, C1, C2 and R2 composition of the antenna matching network for antenna debugging, the default R1, R2 paste 0ohm resistor and C2, C1 empty paste.

RF Connector in the figure is used for testing and conducting test (for example, CE, FCC, etc.), which need to be placed as close as possible by the module, the RF path from the module to the antenna feed point should be kept under 50ohm impedance control.

This product antenna peripheral circuit design, the proposed RF circuit Layout program: RF line trances top layer, a reference to the second layer. Users need to pay attention to the design of the PCB line: to ensure the RF has full reference GND layer.

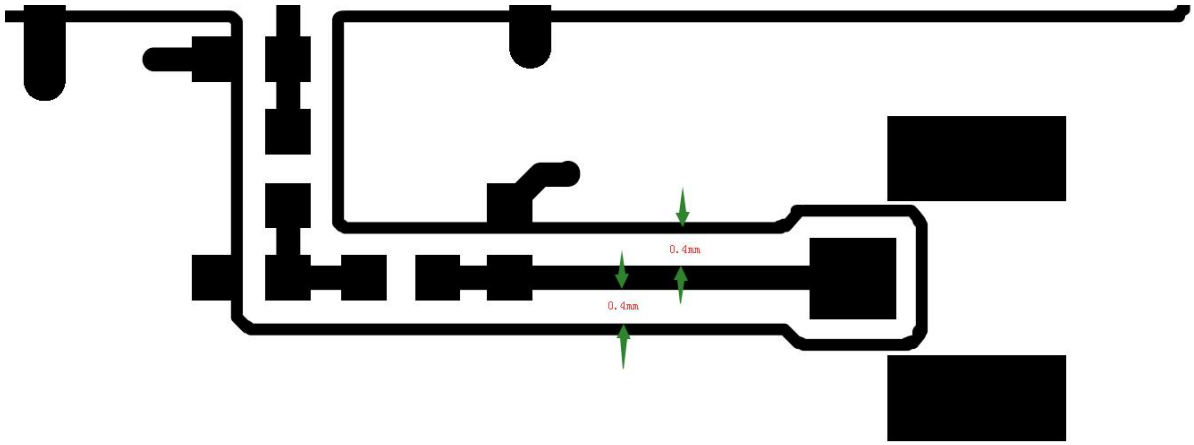

Figure 5.2-2 Antenna Path Reference Design

Middle Band	Band 2/4/66

5.3 GNSS Introduction

GNSS Antenna Selection and Antenna Design

In order to obtain good GNSS reception performance, a good antenna needs to be selected. Proper antenna selection and placement ensures that satellite signals are received at all altitudes for fast and accurate positioning.

The GNSS built into the module has two antenna options:

- Passive antenna
- Active antenna

The recommended technical parameters of active and passive antennas are shown in Table 5.4-1.

Table 5.4-1 Antenna Technical Parameters

Antenna type	Parameters	
	Frequency range	1558-1607MHz

	Polarization	RHCP & Linear
	Gain	>0dBi
Active antenna	Frequency range	1558-1607MHz
	Polarization	RHCP & Linear
	Noise Figure	<1.5dB
	Gain	>10dBi

- **Passive antenna**

Passive antennas are antennas with only radiating elements, such as ceramic antennas, helical antennas, and patch antennas. Passive antennas sometimes contain matching devices for 50ohm matching.

The most commonly used patch antenna in GNSS applications is the patch antenna, which is a planar structure, consisting of a ceramic body and a metal antenna body, and is mounted on a metal base plate.

The most simplified passive antenna design circuit of the GNSS antenna of the L511AN module is shown in Figure 5.4-1.

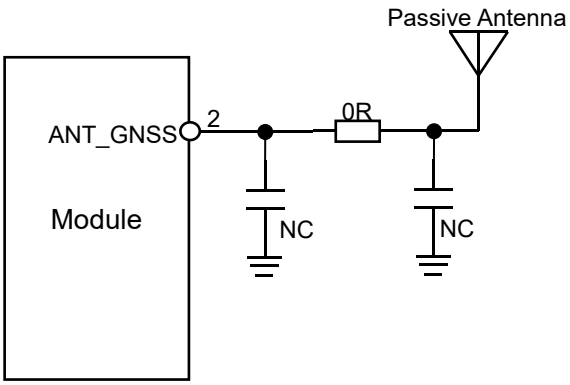

Figure 5.4-1 GNSS Passive Antenna Design

- **Active antenna**

Active antennas have an integrated low noise amplifier (LNA) and require external power supply, which contributes to the power consumption of the GNSS system. The recommended circuit of active antenna is shown in Figure 5.4-2. Inductor L1 is to isolate the RF signal at the active antenna end into the power supply, and the recommended value is not less than 27nH. The role of R1 is to protect the entire circuit when the active antenna end is shorted to ground.

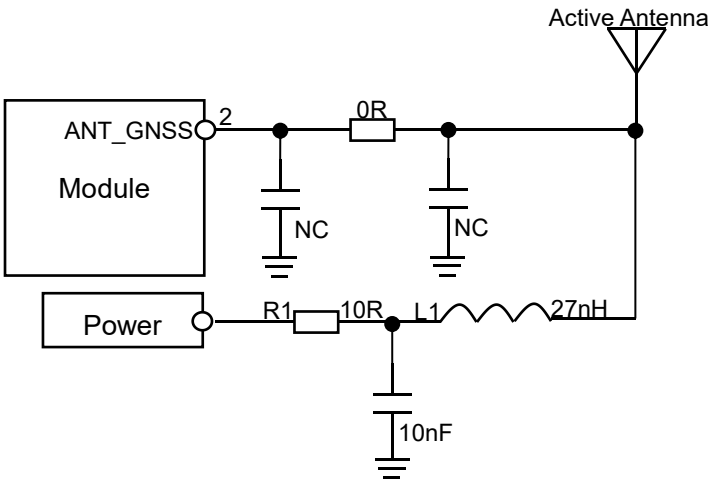

Figure 5.3-2 GNSS Active Antenna Design

6 Storage, Production and Package

6.1 Storage

The rank of moisture proof of the module is level 3. There is an obvious sign on the table of the internal and the external packaging.

In the vacuum sealed bag, the module can be stored for 12 months when the temperature is below 40°C and the humidity is below 90% under good air circulation.

Humidity level is described detail as follows:

Table 6.1-1 Humidity Level

Rank	Factory Environment 23±5°C, Relative Humidity < 60%RH
1	No control < 30°C / 85%RH
2	One year
2a	4 weeks
3	168 hours
4	72 hours
5	48 hours
5a	24 hours
6	Baking before using, SMT during the time table signs

Notes: Moving, storage, production of module must meet the demand of IPC/JEDEC J-STD-033.

Copyright © Shanghai Mobiletek Communication Ltd

6.2 Production

The module is a humidity sensitive device. If the device needs reflow soldering, disassembly and maintenance, we must strictly comply with the requirements of humidity sensitive device. If module is damp, a reflow soldering or using a hot-air gun maintenance will lead to internal damage, because the water vapor has the rapid expansion of the burst, causing physical injury to the device, like PCB foaming and BGA component fail. So customers should refer to the following recommendations.

6.2.1 Module Confirmation and Moisture

The module in the production and packaging process should be strictly accordance with the humidity sensitive device operation. The factory packaging is vacuum bag, desiccant, and humidity indicator card. Please pay attention to the moisture control before SMT and the confirmation of the following aspects.

Demand of Baking Confirmation

Smart module uses vacuum sealed bag, which can make it stored for 12 months under the condition of temp 40°C and humidity < 90%. The module should be baked before reflowing soldering if any of the conditions below happen.

1. Storage exceeds the time limit.

2. Package damages and vacuum bags have air leakage.

3. Humidity indicating card change the color at 10%.

4. Module is placed naked in the air over 168 hours.

5. Module is placed naked in the air under 168 hours but not temp 30°C and humidity < 60%.

Baking Condition Confirmation

The moisture proof level of the smart module is level 3. And the baking conditions are as follows.

Table 6.2.1-1 Baking Conditions

Baking Conditions	**125±5°C / 5%RH**	**45±5°C / 5%RH**
Baking time	8 hours	192 hours
Description	Not use the original tray	Can use the original tray

Notes: The original anti-ESD tray temperature does not exceed 50°C. Otherwise the tray will be deformed.

The anti-ESD tray of the original packaging is only used for packaging, and can't be used as a SMT tray.

During taking and placing, please take notes of ESD and cannot be placed as overlay.

Customer Product Maintenance

If maintenance module after SMT, it is easy for damp module to damage when removing, so the module disassembly and other related maintenance operations should complete within 48 hours after SMT, or need to bake and then maintenance the module.

Because the module return from the field work can't ensure the dry state, it must be baked in accordance with the conditions of baking, then for disassembly and maintenance. If it has been exposed to the humid environment for a long time, please properly extend the baking time, such as 125°C/36 hours.

6.2.2 SMT Reflow Attentions

The module has the BGA chips, chip resistances and capacitances internally, which will melt at high

temperature. If module melt completely encountered a large shock, such as excessive vibration of reflux conveyor belt or hit the board, internal components will easily shift or be false welding. So, using intelligent modules over the furnace need to pay attention to:

- Modules can't be vibrate larger, namely customer requirements as far as possible in orbit (chain) furnace, furnace, avoid on the barbed wire furnace, in order to ensure smooth furnace.
- The highest temperature can't too high. In the condition that meet the welding quality of customer motherboard and module, the lower furnace temperature and the shorter maximum temperature time, the better.

Some customer's temperature curve in the line is not suitable, high temperature is too high, and customer motherboard melt good, but non-performing rate is on the high side. Through the analysis of the causes, it found that melt again of BGA components lead device offset and short circuit. After adjusting the temperature curve, it can ensure that the customer's motherboard the welding quality, and also improve the pass through rate. Non-performing rate is controlled below the 2/10000.

6.2.3 SMT Stencil Design and the Problem of Less Tin Soldering

Part of customers found false welding or circuit short when reflowing. The main reason is module tin less, PCB distortion or tins too large. Suggestions are as follows:

- Suggest use ladder stencil, which means the depth of the region of module is thicker than other areas. Please adjust validation according to the measured thickness of solder paste, the actual company conditions and experience value. The products need to strictly test.
- Stencil: Reference module package and the user can adjust according to their company experience; Outside of the module, the stencil extends outside. The GND pads use the net stencil.

6.2.4 SMT Attentions

If customer motherboard is thin and slender with a furnace deformation, warping risks, you will be

suggested to create "a furnace vehicle" to ensure the welding quality. Other production proposals are as follows:

- The solder pastes use brands like Alfa.
- The module must use the SMT machine mount (important), and do not recommend manually placed or manual welding.
- For SMT quality, Please ensure the necessary condition according to actual condition of factory before SMT, like SMT pressure, speed (very important), stencil ways.
- We must use the reflow oven more than 8 temperature zones, and strictly control the furnace temperature curve.

Recommended temperature:

B. constant temperature zone: temperature 140-210°C, time: 60s-120s.

E. recirculation zone: PEAK temperature 220-245°C, time: 45s-75s.

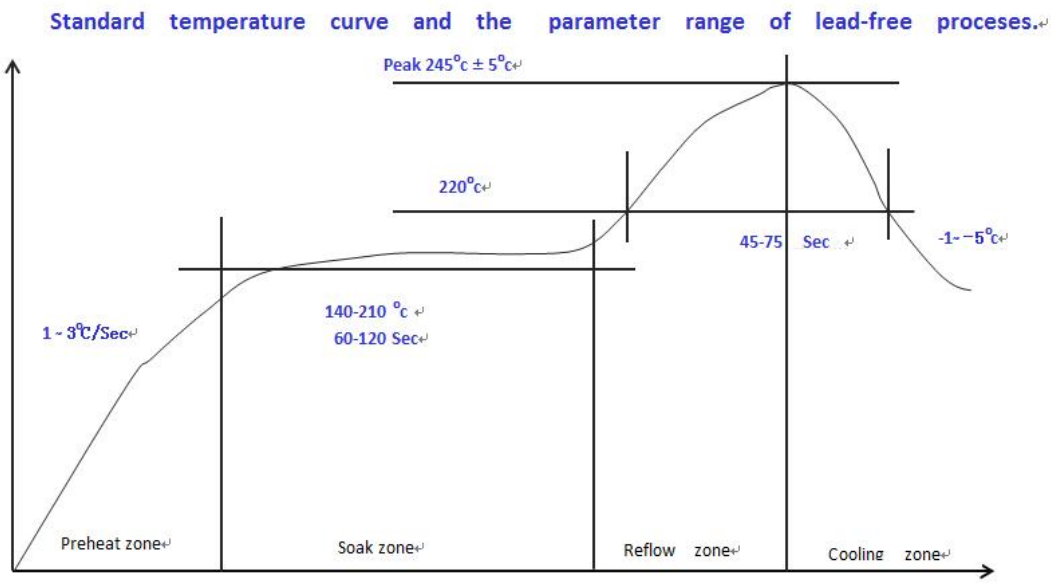

Figure 6.2.4-1 Temperature Curve

Notes: Customer's board deformation must be controlled well. By reducing the number of imposition or increasing patch clamp to reduce the deformation.

Module thickness of the stencil is recommended to be thickened, and the rest position can be maintained by 0.1mm.

6.3 Packaging Information

The L511A/L511AN module is packaged with a roll of tape and sealed with a vacuum-sealed antistatic bag.

Coil tape

One coil can hold 500 modules, as shown in the figure.

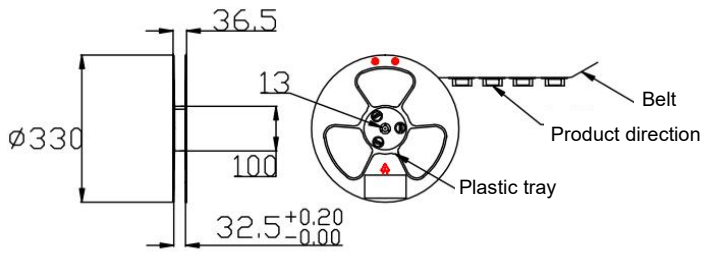

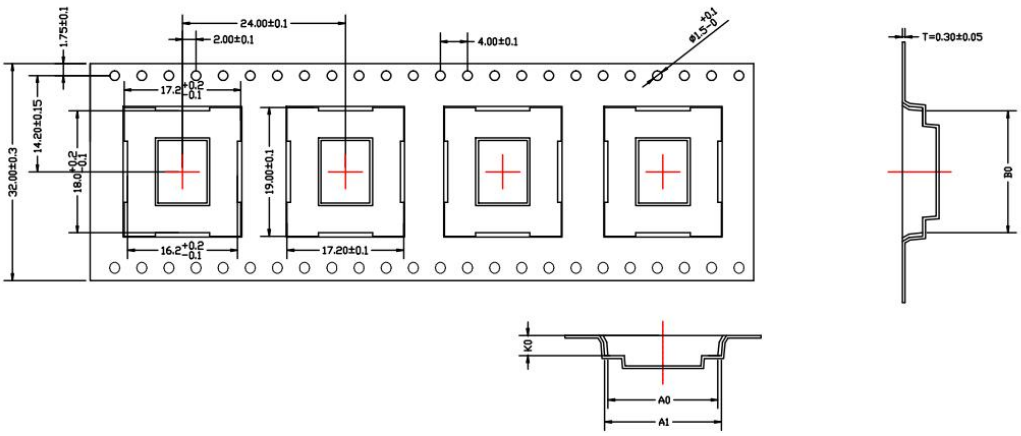

Figure 6.3-1 Coil Tape Information (Unit: mm)

7 Safety Information

For the reasonable usage of the module, please comply with all these safety notices of this page. The product manufacturers should send followed safety information to user, operator or product's spec.

The devices using the module may disturb some electronic equipment. Put the module away from the phone, TV, radio and automation equipment to avoid the module and the equipment to interfere with each other.

Shut down the mobile device or change to flying mode before boarding. The Using of wireless appliances in an aircraft is forbidden to avoid the interference, or else cause to unsafe flying, even violate the law.

In hospital or health care center, switch off the mobile devices. RF interference may damage the medical devices, like hearing-aid, cochlear implant and heart pacemaker etc.

Mobile devices can't guarantee to connect in all conditions, like no fee or with an invalid SIM card. When you need emergent help, please remember using emergency calls and make sure your device power on in an area with well signal.

Put the module away from inflammable gases. Switch off the mobile device when close to gas station, oil depot, chemical plant etc.

The module is not water proof. Please don't use the module in the area with high humidity like bathroom, which will decelerate the physical performance, insulation resistance and mechanical strength.

Non-professionals can't teardown the module which will damage it. Refer to the specification or communicate the related staffs to repair and maintain it.

Copyright © Shanghai Mobiletek Communication Ltd

Please switch on the module before cleaning. The staffs should be equipped with anti-ESD clothing and gloves.

The users and product manufacturers should abide by the national law of wireless modules and devices. If not, Mobiletek will not respond the related damages.

Note：

FCC statement.

According to the FCC KDB 996369 D03 OEM Manual v01r01 guidance, the following conditions must be strictly followed when using this certified module:

KDB 996369 D03 OEM Manual v01r01

2.2 List of applicable FCC rules

This module ha been tested for compliance with FCC Part 22/24/27.

2.3 Summarize the specific operational use conditions.

The module is tested for standalone mobile RF exposure use conditions. Any other usage conditions such as co-location with other transmitter(s) or in a portable condition will need to be separate reassessment through a class II permissive change application or new certification.

2.4 Limited module procedures

Not applicable

2.5 Trace antenna designs

See the section 5.2 in this user manual

2.6 RF exposure considerations

Exposure to Radio Frequency Radiation. This equipment must be installed and operated in accordance with provided instructions, and the antenna(s) used for this transmitter must be installed to provide a separation distance of at least 20 cm from all persons and must not be collocated or operating in conjunction with any other antenna or transmitter. End-users and installers must be provided with antenna installation instructions and transmitter operating conditions for satisfying RF exposure compliance.

2.7 Antennas

External Antenna, Max Antenna Gain 2.3dBi，model number: L511A

2.8 Label and compliance information

if the host is marketed so that end users do not have straight forward commonly used methods for access to remove the module so that the FCC ID of the module is visible; then an additional permanent label referring to the enclosed module: Contains Transmitter Module FCC ID: 2AK9DL511A or Contains FCC ID: 2AK9DL511A must be used.

2.9 Information on test modes and additional testing requirements

Not applicable

2.10 Additional testing, Part 15 Subpart B disclaimer

This transmitter module is tested as a subsystem and its certification does not cover the FCC Part 15 Subpart B rule requirement applicable to the final host. The final host will sill need comply with Part 15 Subpart B rule requirement if applicable.

Copyright © Shanghai Mobiletek Communication Ltd