FCC/IC - TEST REPORT

Report Number	: 68.760.19.0336.01	Date of Issue:	July 27, 2019
Model	: 3BOX A2		
Product Type	: Wearable on Neck Host		
Applicant	: VR Technology (Shenzhen) Limited		
Address	: Room 201, 12 Gaoxin South Road, Huiheng Building, Nanshan District, Shenzhen		
Manufacturer	: VR Technology (Shenzhen) Limited		
Address	: Room 201, 12 Gaoxin South Road, Huiheng Building, Nanshan District, Shenzhen		
Test Result	: ■ Positive ☐ Negative		
Total pages including Appendices	: 27		

TÜV SÜD Certification and Testing (China) Co., Ltd. – Shenzhen Branch is a subcontractor to TÜV SÜD Product Service GmbH according to the principles outlined in ISO 17025.

TÜV SÜD Certification and Testing (China) Co., Ltd. – Shenzhen Branch reports apply only to the specific samples tested under stated test conditions. Construction of the actual test samples has been documented. It is the manufacturer's responsibility to assure that additional production units of this model are manufactured with identical electrical and mechanical components. The manufacturer/importer is responsible to the Competent Authorities in Europe for any modifications made to the production units which result in non-compliance to the relevant regulations. TÜV SÜD Certification and Testing (China) Co., Ltd. – Shenzhen Branch shall have no liability for any deductions, inferences or generalizations drawn by the client or others from TÜV SÜD Certification and Testing (China) Co., Ltd. – Shenzhen Branch issued reports.

This report is the confidential property of the client. As a mutual protection to our clients, the public and ourselves, extracts from the test report shall not be reproduced except in full without our written approval

1. Table of Contents

1. Table of Contents 2
2. Details about the Test Laboratory 3
3. Description of the Equipment Under Test 4
4. Summary of Test Standards 5
5. Summary of Test Results 6
6. General Remarks 7
7. Test Setups 8
8. Systems test configuration 9
9. Technical Requirement 10
   9.1 Conducted Emission Test 10
   9.2 Radiated Emission Test 13
10. Test Equipment List 26
11. Measurement System Uncertainty 27

TÜV SÜD Certification and Testing (China) Co., Ltd. Shenzhen Branch
Building 12&13, Zhiheng Wisdomland Business Park, Nantou Checkpoint Road 2, Nanshan District,
Shenzhen City, 518052, P. R. China Tel. +86 755 8828 6998, Fax: +86 755 8828 5299

2. Details about the Test Laboratory

Details about the Test Laboratory
Test Site 1

Company name:	TÜV SÜD Certification and Testing (China) Co., Ltd. Shenzhen Branch Building 12 & 13, Zhiheng Wisdomland Business Park, Nantou Checkpoint Road 2, Nanshan District Shenzhen 518052 P.R. China
Telephone:	86 755 8828 6998
Fax:	86 755 8828 5299
FCC Registration No.:	514049
FCC Designation Number:	CA5009
IC Registration No.:	10320A

3. Description of the Equipment Under Test

Product:	Wearable on Neck Host
Model no.:	3BOX A2
FCC ID:	2AKA6-A2
Options and accessories:	Adapter and USB Cable
Rating:	Supplied by 5*3.8Vdc 1100mAh Li-ion Rechargeable battery Charged by 5.0Vdc, 3.0A external adapter
Adapter information:	Adapter Model: A138A-120150U-US2 Input: 100-240Vac, 50/60Hz; 0.5A Output: 5.0Vdc, 3.0A
RF Transmission Frequency:	2402MHz-2480MHz
No. of Operated Channel:	40
Modulation:	GFSK
Antenna Type:	Integrated antenna
Antenna Gain:	3.0dBi
Description of the EUT:	The Equipment Under Test (EUT) is a Wearable on Neck Host which support Bluetooth function and WiFi operated at 5GHz and 2.4GHz.

TÜV SÜD Certification and Testing (China) Co., Ltd. Shenzhen Branch
Building 12&13, Zhiheng Wisdomland Business Park, Nantou Checkpoint Road 2, Nanshan District,
Shenzhen City, 518052, P. R. China Tel. +86 755 8828 6998, Fax: +86 755 8828 5299

4. Summary of Test Standards

Test Standards	
FCC Part 15 Subpart B 10-1-18 Edition	Unintentional Radiators

TÜV SÜD Certification and Testing (China) Co., Ltd. Shenzhen Branch
Building 12&13, Zhiheng Wisdomland Business Park, Nantou Checkpoint Road 2, Nanshan District,
Shenzhen City, 518052, P. R. China Tel. +86 755 8828 6998, Fax: +86 755 8828 5299

5. Summary of Test Results

Emission Tests				
FCC Part 15 Subpart B 10-1-18 Edition				
Test Condition	Pages	Test Result		
		Pass	Fail	N/A
Conducted Emission on AC 150kHz to 30MHz	10	☒	☐	☐
Radiated Emission 30MHz to 1000MHz	15	☒	☐	☐
Radiated Emission 1000MHz to 40000MHz	18	☒	☐	☐

TÜV SÜD Certification and Testing (China) Co., Ltd. Shenzhen Branch
Building 12&13, Zhiheng Wisdomland Business Park, Nantou Checkpoint Road 2, Nanshan District,
Shenzhen City, 518052, P. R. China Tel. +86 755 8828 6998, Fax: +86 755 8828 5299

6. General Remarks

Remarks

The Equipment Under Test (EUT) is a Wearable on Neck Host which support Bluetooth function and WiFi operated at 5GHz and 2.4GHz.

SUMMARY:

All tests according to the regulations cited on page 5 were

■ - Performed

☐ - **Not** Performed

The Equipment under Test

■ - **Fulfills** the general approval requirements.

☐ - **Does not** fulfill the general approval requirements.

Sample Received Date:	June 13, 2019
Testing Start Date:	June 14, 2019
Testing End Date:	July 10, 2019

- TÜV SÜD Certification and Testing (China) Co., Ltd. Shenzhen Branch -

Reviewed by:	Prepared by:	Tested by:
John Zhi	Alan Xiong	Tree Zhan
Project Manager	Project Engineer	Test Engineer

TÜV SÜD Certification and Testing (China) Co., Ltd. Shenzhen Branch
Building 12&13, Zhiheng Wisdomland Business Park, Nantou Checkpoint Road 2, Nanshan District,
Shenzhen City, 518052, P. R. China Tel. +86 755 8828 6998, Fax: +86 755 8828 5299

7. Test Setups

Below 1GHz

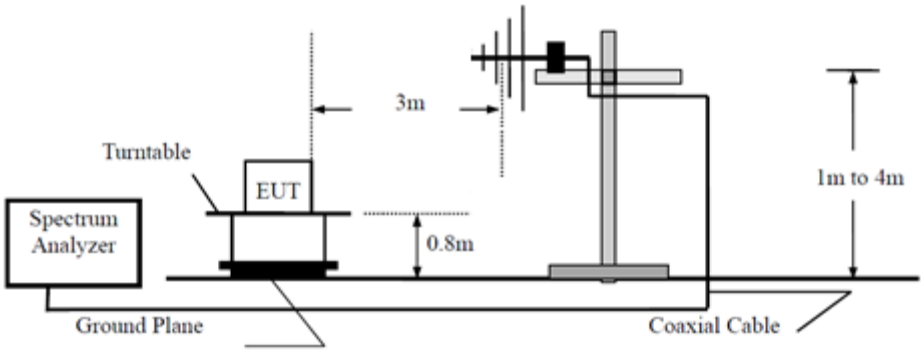

Above 1GHz

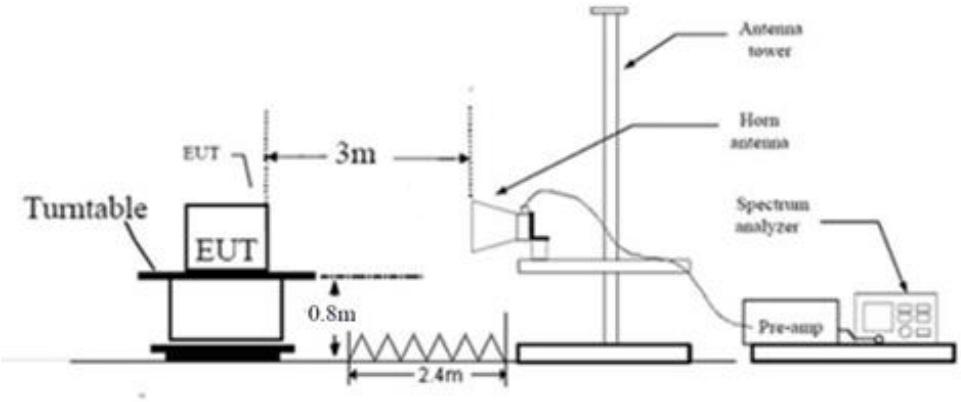

AC Power Line Conducted Emission test setups

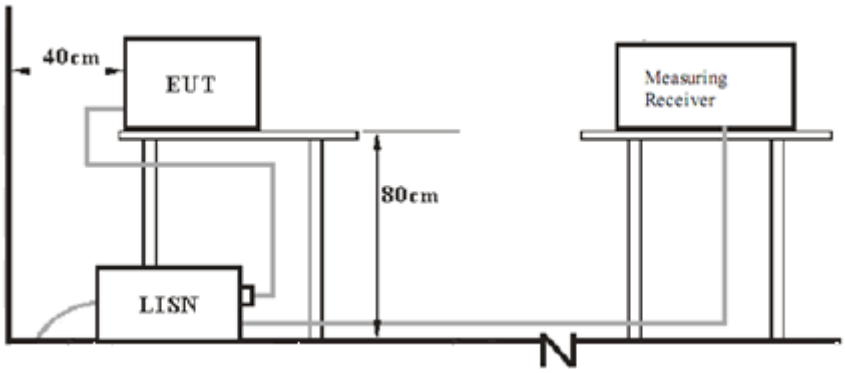

TÜV SÜD Certification and Testing (China) Co., Ltd. Shenzhen Branch
Building 12&13, Zhiheng Wisdomland Business Park, Nantou Checkpoint Road 2, Nanshan District,
Shenzhen City, 518052, P. R. China Tel. +86 755 8828 6998, Fax: +86 755 8828 5299

8. Systems test configuration

Auxiliary Equipment Used during Test:

DESCRIPTION	MANUFACTURER	MODEL NO.	S/N
Notebook	Lenovo	X240	---
VR glasses	VR Technology	3Glasses	---

TÜV SÜD Certification and Testing (China) Co., Ltd. Shenzhen Branch
Building 12&13, Zhiheng Wisdomland Business Park, Nantou Checkpoint Road 2, Nanshan District,
Shenzhen City, 518052, P. R. China Tel. +86 755 8828 6998, Fax: +86 755 8828 5299

9. Technical Requirement

9.1 Conducted Emission Test

Test Method

1. The EUT was placed 0.4 meter from the conducting wall of the shielding room was kept at least 80 centimeters from any other grounded conducting surface.
2. Connect EUT to the power mains through a line impedance stabilization network (LISN).
3. All the support units are connecting to the other LISN.
4. The LISN provides 50 ohm coupling impedance for the measuring instrument.
5. Both sides of AC line were checked for maximum conducted interference.
6. The frequency range from 150 kHz to 30 MHz was searched.
7. Set the test-receiver system to Peak Detect Function and specified bandwidth (IF Bandwidth = 9kHz) with Maximum Hold Mode. Then measurement is also conducted by Average Detector and Quasi-Peak Detector Function respectively.

Limit

According to §15.107, conducted emissions limit as below:

Frequency MHz	QP Limit dBµV	AV Limit dBµV
0.150-0.500	66-56*	56-46*
0.500-5	56	46
5-30	60	50

Remark: *Decreasing linearly with logarithm of the frequency

TÜV SÜD Certification and Testing (China) Co., Ltd. Shenzhen Branch
Building 12&13, Zhiheng Wisdomland Business Park, Nantou Checkpoint Road 2, Nanshan District,
Shenzhen City, 518052, P. R. China Tel. +86 755 8828 6998, Fax: +86 755 8828 5299

Conducted Emission

Product Type	:	Wearable on Neck Host
M/N	:	3BOX A2
Operating Condition	:	Charging Mode
Test Specification	:	Line
Comment	:	AC 120V/60Hz

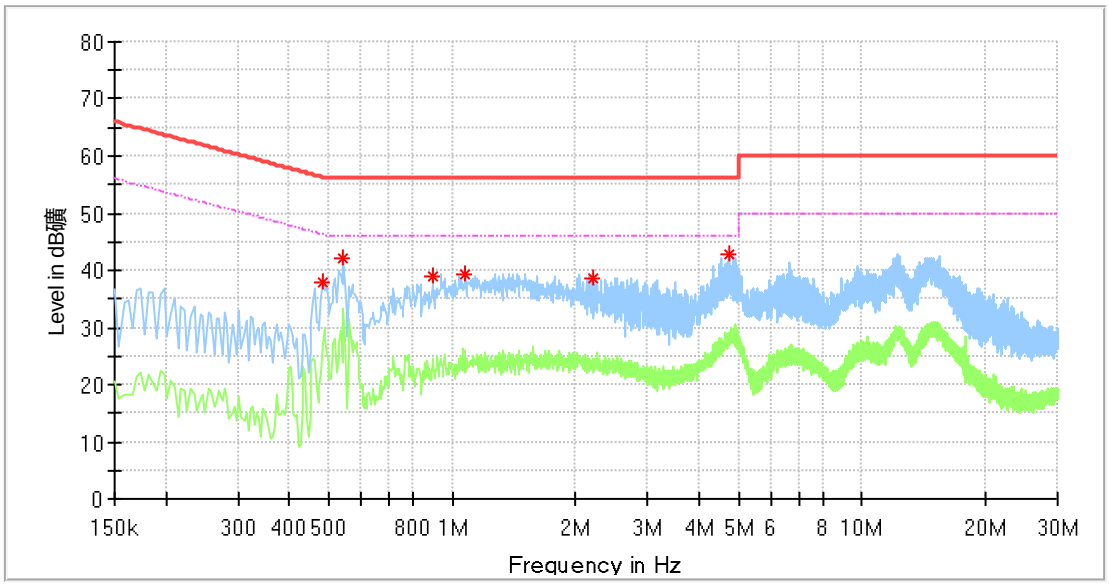

Frequency (MHz)	MaxPeak (dBµV)	Average (dBµV)	Limit (dBµV)	Margin (dB)	Line	Corr. (dB)
0.482000	38.02	---	56.30	18.28	L1	10.3
0.542000	42.08	---	56.00	13.92	L1	10.3
0.898000	39.12	---	56.00	16.88	L1	10.3
1.078000	39.35	---	56.00	16.65	L1	10.3
2.214000	38.60	---	56.00	17.40	L1	10.3
4.762000	42.95	---	56.00	13.05	L1	10.4

Remark:
Max Peak= Read level + Corrector factor
Correct factor=cable loss + LISN factor
(The Reading Level is recorded by software which is not shown in the sheet)

TÜV SÜD Certification and Testing (China) Co., Ltd. Shenzhen Branch
Building 12&13, Zhiheng Wisdomland Business Park, Nantou Checkpoint Road 2, Nanshan District,
Shenzhen City, 518052, P. R. China Tel. +86 755 8828 6998, Fax: +86 755 8828 5299

Conducted Emission

Product Type	:	Wearable on Neck Host
M/N	:	3BOX A2
Operating Condition	:	Charging Mode
Test Specification	:	Neutral
Comment	:	AC 120V/60Hz

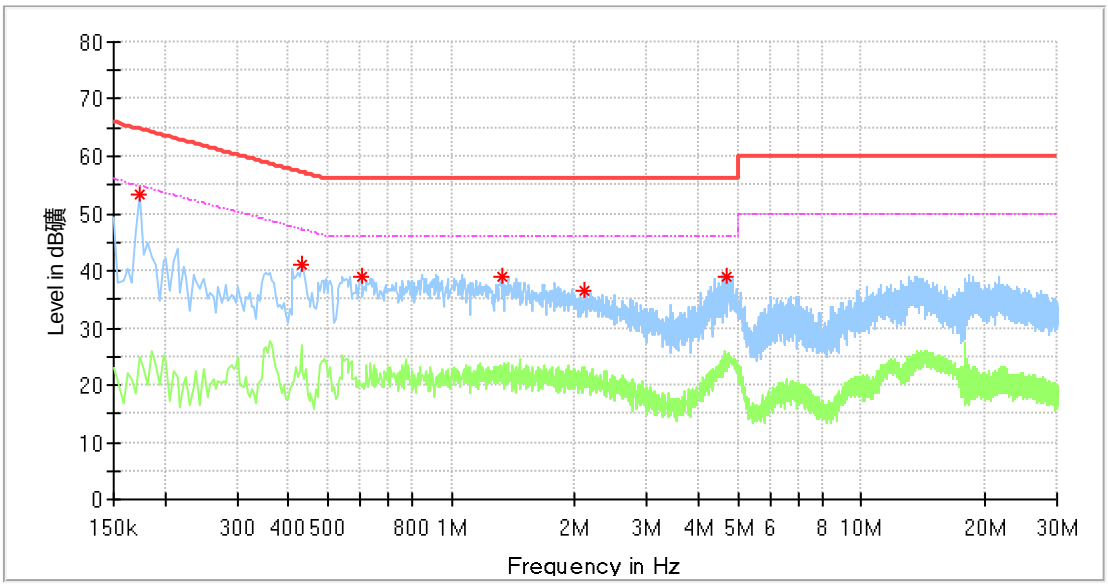

Frequency (MHz)	MaxPeak (dBµV)	Average (dBµV)	Limit (dBµV)	Margin (dB)	Line	Corr. (dB)
0.174000	53.17	---	64.77	11.60	N	10.2
0.430000	40.90	---	57.25	16.35	N	10.3
0.602000	39.09	---	56.00	16.91	N	10.3
1.334000	38.93	---	56.00	17.07	N	10.3
2.114000	36.34	---	56.00	19.66	N	10.3
4.698000	38.96	---	56.00	17.04	N	10.4

Remark:
Max Peak= Read level + Corrector factor
Correct factor=cable loss + LISN factor
(The Reading Level is recorded by software which is not shown in the sheet)

TÜV SÜD Certification and Testing (China) Co., Ltd. Shenzhen Branch
Building 12&13, Zhiheng Wisdomland Business Park, Nantou Checkpoint Road 2, Nanshan District,
Shenzhen City, 518052, P. R. China Tel. +86 755 8828 6998, Fax: +86 755 8828 5299

9.2 Radiated Emission Test

Test Method

1: The EUT was place on a turn table which is 0.8m above ground plane. The table was rotated 360 degrees to determine the position of the highest radiation.
2: The EUT was set 3 meters away from the interference – receiving antenna, which was mounted on the top of a variable – height antenna tower.
3: The height of antenna is varied from one meter to four meters above the ground to determine the maximum value of the field strength. Both horizontal and vertical polarizations of the antenna are set to make the measurement.
4: For each suspected emission, the EUT was arranged to its worst case and then the antenna was tuned to heights from 1 meter to 4 meters and the rotatable table was turned from 0 degrees to 360 degrees to find the maximum reading.
5: Use the following spectrum analyzer settings According to C63.4:2010:
For Above 1GHz
Span = wide enough to capture the peak level of the in-band emission and all spurious
RBW = 1MHz, VBW≥RBW for peak measurement and VBW = 10Hz for average measurement,
Sweep = auto, Detector function = peak, Trace = max hold.
For Below 1GHz
Use the following spectrum analyzer settings:
Span = wide enough to capture the peak level of the in-band emission and all spurious
RBW = 120 KHz, VBW≥RBW for peak measurement, Sweep = auto, Detector function = Quasi-peak, Trace = max hold.

Limits

According to §15.109, Radiated emissions limit as below:

Frequency MHz	Field Strength µV/m	Field Strength dBµV/m	Detector
30-88	100	40	QP
88-216	150	43.5	QP
216-960	200	46	QP
960-1000	500	54	QP
Above 1000	500	54	AV
Above 1000	5000	74	PK

Remark: we test all modes and only worse case (2.4GWiFi traffic) recorded in this report.

TÜV SÜD Certification and Testing (China) Co., Ltd. Shenzhen Branch
Building 12&13, Zhiheng Wisdomland Business Park, Nantou Checkpoint Road 2, Nanshan District,
Shenzhen City, 518052, P. R. China Tel. +86 755 8828 6998, Fax: +86 755 8828 5299

Radiated Emission

Product Type	:	Wearable on Neck Host
M/N	:	3BOX A2
Operating Condition	:	Charging Mode
Ant. Polarity	:	Horizontal
Comment	:	30-1000MHz

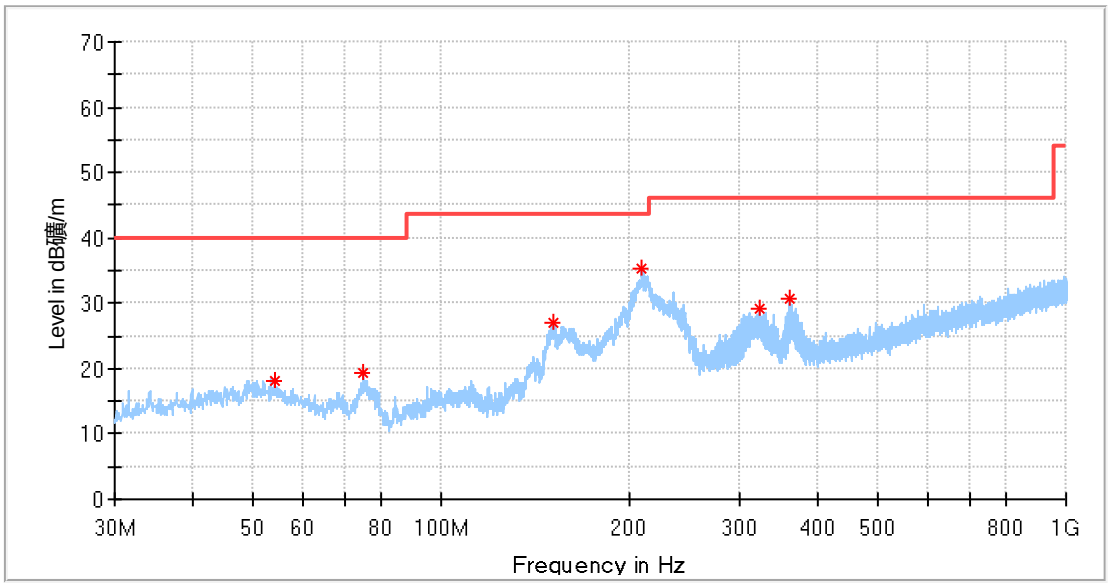

Frequency (MHz)	MaxPeak (dBµV/m)	Limit (dBµV/m)	Margin (dB)	Height (cm)	Pol	Azimuth (deg)	Corr. (dB)
54.007500	18.20	40.00	21.80	100.0	H	358.0	17.4
75.105000	19.22	40.00	20.78	100.0	H	173.0	12.1
151.613750	26.98	43.50	16.52	100.0	H	306.0	13.3
209.571250	35.39	43.50	8.11	100.0	H	62.0	17.0
322.576250	29.31	46.00	16.69	100.0	H	236.0	20.0
361.618750	30.63	46.00	15.37	100.0	H	322.0	20.8

Remark:
Corrected Amplitude = Read level + Corrector factor
Above 1GHz: Corrector factor = Antenna Factor + Cable Loss- Amplifier Gain
Below 1GHz: Corrector factor = Antenna Factor + Cable Loss
(The Reading Level is recorded by software which is not shown in the sheet)

TÜV SÜD Certification and Testing (China) Co., Ltd. Shenzhen Branch
Building 12&13, Zhiheng Wisdomland Business Park, Nantou Checkpoint Road 2, Nanshan District,
Shenzhen City, 518052, P. R. China Tel. +86 755 8828 6998, Fax: +86 755 8828 5299

Radiated Emission

Product Type	:	Wearable on Neck Host
M/N	:	3BOX A2
Operating Condition	:	Charging Mode
Ant. Polarity	:	Vertical
Comment	:	30-1000MHz

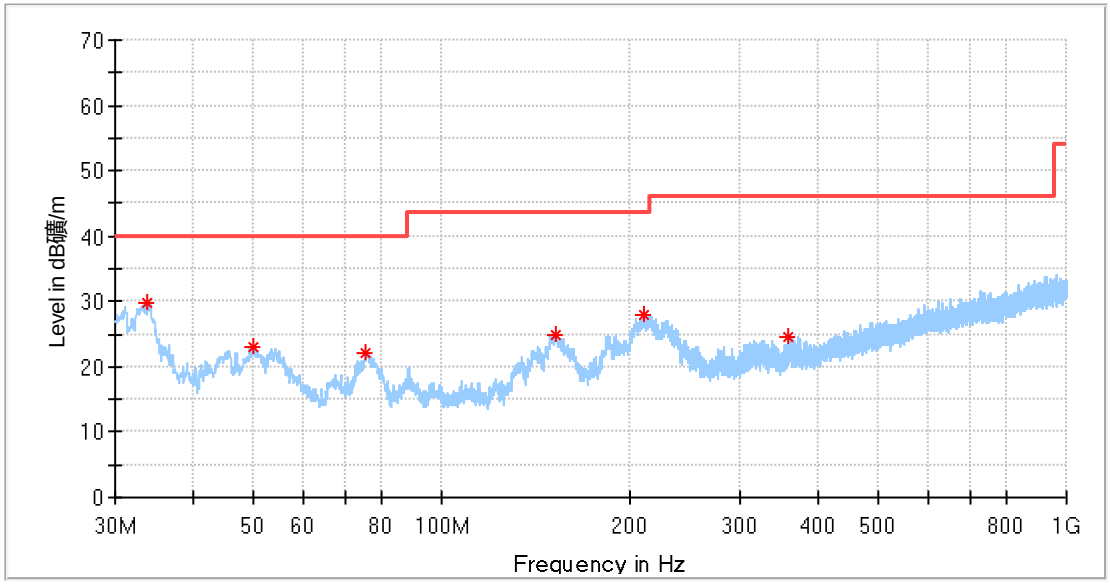

Frequency (MHz)	MaxPeak (dBµV/m)	Limit (dBµV/m)	Margin (dB)	Height (cm)	Pol	Azimuth (deg)	Corr. (dB)
33.758750	29.81	40.00	10.19	100.0	V	48.0	14.5
49.945625	22.96	40.00	17.04	100.0	V	0.0	18.2
75.650625	22.15	40.00	17.85	100.0	V	0.0	12.1
152.220000	24.89	43.50	18.61	100.0	V	0.0	13.4
211.086875	27.95	43.50	15.55	100.0	V	355.0	17.1
359.678750	24.43	46.00	21.57	100.0	V	0.0	20.8

Remark:
Corrected Amplitude = Read level + Corrector factor
Above 1GHz: Corrector factor = Antenna Factor + Cable Loss- Amplifier Gain
Below 1GHz: Corrector factor = Antenna Factor + Cable Loss
(The Reading Level is recorded by software which is not shown in the sheet)

TÜV SÜD Certification and Testing (China) Co., Ltd. Shenzhen Branch
Building 12&13, Zhiheng Wisdomland Business Park, Nantou Checkpoint Road 2, Nanshan District,
Shenzhen City, 518052, P. R. China Tel. +86 755 8828 6998, Fax: +86 755 8828 5299

Radiated Emission

Product Type	:	Wearable on Neck Host
M/N	:	3BOX A2
Operating Condition	:	Normal Working with PC (Playing 1KHz Video)
Ant. Polarity	:	Horizontal
Comment	:	30-1000MHz

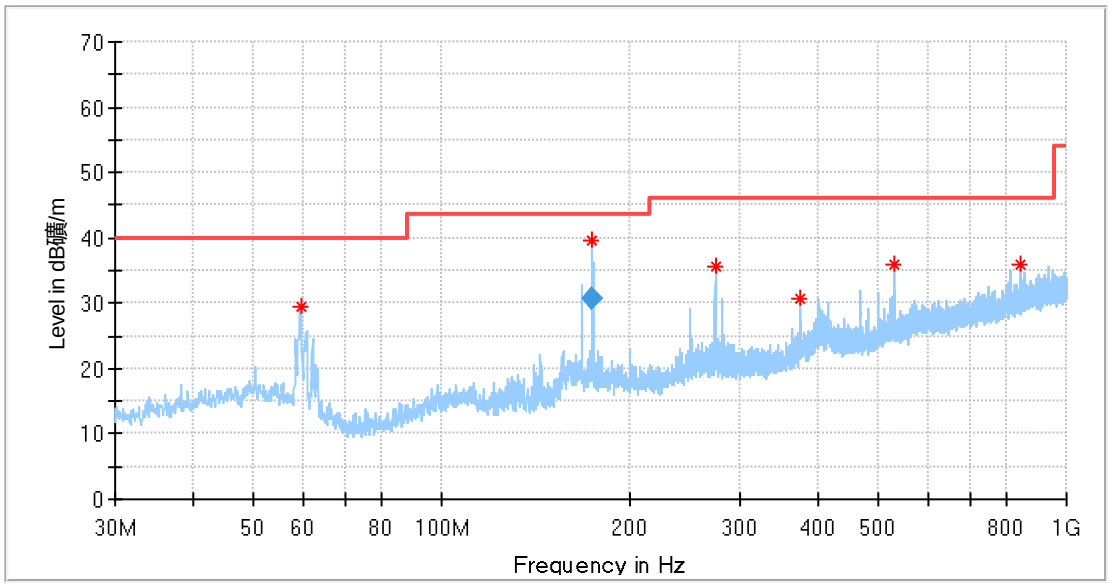

Frequency (MHz)	MaxPeak (dBµV/m)	Limit (dBµV/m)	Margin (dB)	Height (cm)	Pol	Azimuth (deg)	Corr. (dB)
59.463750	29.57	40.00	10.43	200.0	H	163.0	16.4
174.289688	30.71	43.50	12.79	188.0	H	-138.0	14.7
274.803750	35.65	46.00	10.35	200.0	H	329.0	18.9
373.440625	30.57	46.00	15.43	200.0	H	108.0	21.1
530.944375	36.00	46.00	10.00	200.0	H	233.0	24.7
845.406250	36.07	46.00	9.93	200.0	H	329.0	29.2

Remark:
Corrected Amplitude = Read level + Corrector factor
Above 1GHz: Corrector factor = Antenna Factor + Cable Loss- Amplifier Gain
Below 1GHz: Corrector factor = Antenna Factor + Cable Loss
(The Reading Level is recorded by software which is not shown in the sheet)

TÜV SÜD Certification and Testing (China) Co., Ltd. Shenzhen Branch
Building 12&13, Zhiheng Wisdomland Business Park, Nantou Checkpoint Road 2, Nanshan District,
Shenzhen City, 518052, P. R. China Tel. +86 755 8828 6998, Fax: +86 755 8828 5299

Radiated Emission

Product Type	:	Wearable on Neck Host
M/N	:	3BOX A2
Operating Condition	:	Normal Working with PC (Playing 1KHz Video)
Ant. Polarity	:	Vertical
Comment	:	30-1000MHz

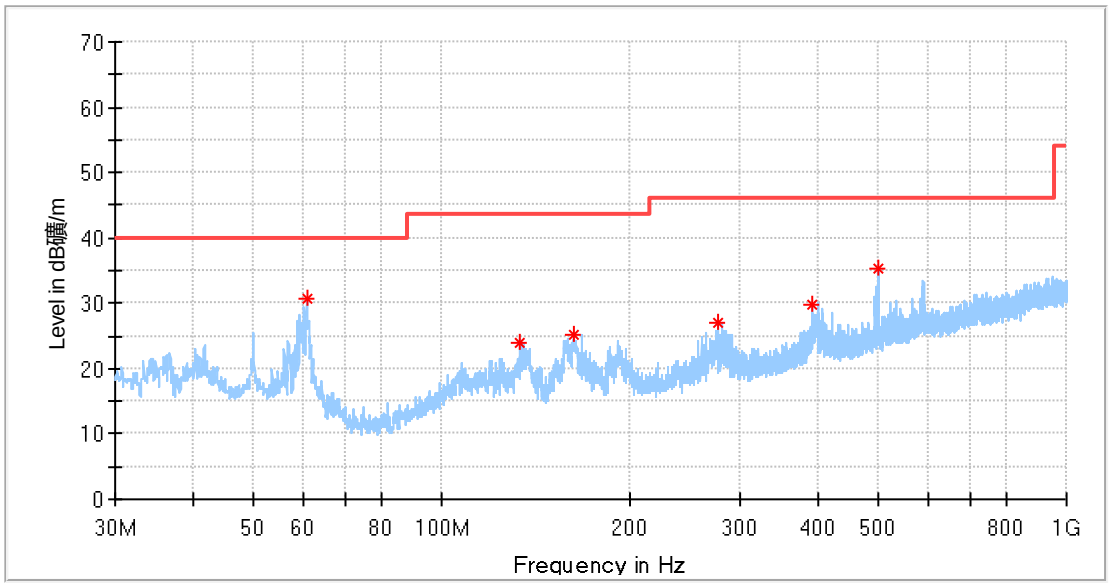

Frequency (MHz)	MaxPeak (dBµV/m)	Limit (dBµV/m)	Margin (dB)	Height (cm)	Pol	Azimuth (deg)	Corr. (dB)
60.736875	30.85	40.00	9.15	100.0	V	0.0	15.9
133.668750	23.80	43.50	19.70	100.0	V	79.0	13.1
163.132500	25.17	43.50	18.33	100.0	V	103.0	14.2
276.258750	27.03	46.00	18.97	100.0	V	0.0	19.0
390.658125	29.76	46.00	16.24	100.0	V	126.0	21.4
498.388750	35.44	46.00	10.56	100.0	V	4.0	23.9

Remark:
Corrected Amplitude = Read level + Corrector factor
Above 1GHz: Corrector factor = Antenna Factor + Cable Loss- Amplifier Gain
Below 1GHz: Corrector factor = Antenna Factor + Cable Loss
(The Reading Level is recorded by software which is not shown in the sheet)

TÜV SÜD Certification and Testing (China) Co., Ltd. Shenzhen Branch
Building 12&13, Zhiheng Wisdomland Business Park, Nantou Checkpoint Road 2, Nanshan District,
Shenzhen City, 518052, P. R. China Tel. +86 755 8828 6998, Fax: +86 755 8828 5299

Radiated Emission

Product Type	:	Wearable on Neck Host
M/N	:	3BOX A2
Operating Condition	:	Data transmission Mode
Ant. Polarity	:	Horizontal
Comment	:	30-1000MHz

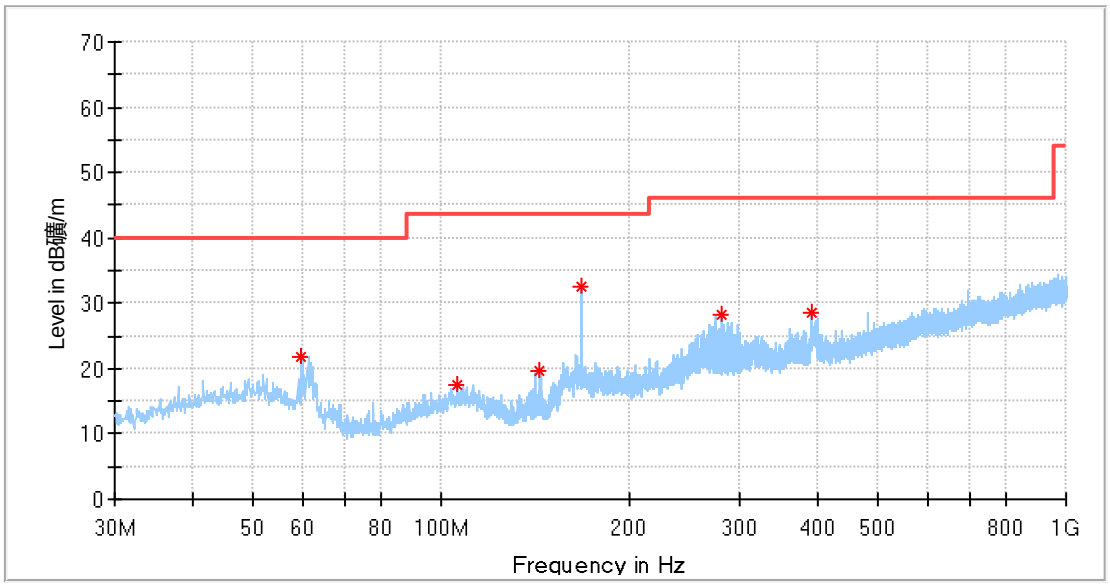

Frequency (MHz)	MaxPeak (dBµV/m)	Limit (dBµV/m)	Margin (dB)	Height (cm)	Pol	Azimuth (deg)	Corr. (dB)
59.645625	21.75	40.00	18.25	100.0	H	0.0	16.4
105.963125	17.59	43.50	25.91	100.0	H	0.0	16.6
143.975000	19.76	43.50	23.74	100.0	H	292.0	13.3
167.982500	32.46	43.50	11.04	100.0	H	180.0	14.4
281.411875	28.10	46.00	17.90	100.0	H	109.0	19.1
390.597500	28.50	46.00	17.50	100.0	H	133.0	21.4

Remark:
Corrected Amplitude = Read level + Corrector factor
Above 1GHz: Corrector factor = Antenna Factor + Cable Loss- Amplifier Gain
Below 1GHz: Corrector factor = Antenna Factor + Cable Loss
(The Reading Level is recorded by software which is not shown in the sheet)

TÜV SÜD Certification and Testing (China) Co., Ltd. Shenzhen Branch
Building 12&13, Zhiheng Wisdomland Business Park, Nantou Checkpoint Road 2, Nanshan District,
Shenzhen City, 518052, P. R. China Tel. +86 755 8828 6998, Fax: +86 755 8828 5299

Radiated Emission

Product Type	:	Wearable on Neck Host
M/N	:	3BOX A2
Operating Condition	:	Data transmission Mode
Ant. Polarity	:	Vertical
Comment	:	30-1000MHz

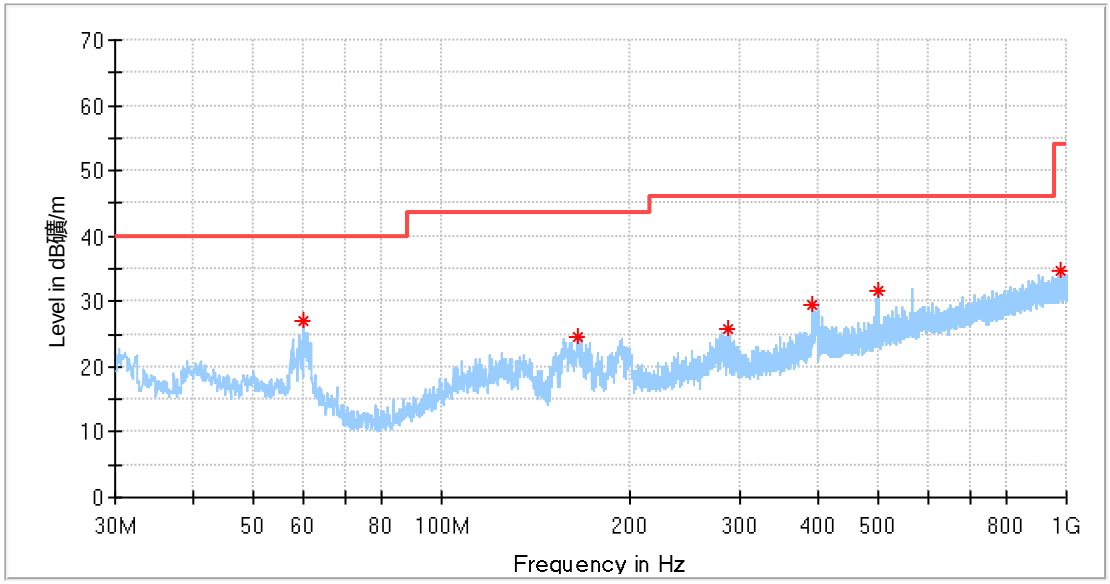

Frequency (MHz)	MaxPeak (dBµV/m)	Limit (dBµV/m)	Margin (dB)	Height (cm)	Pol	Azimuth (deg)	Corr. (dB)
59.948750	27.12	40.00	12.88	100.0	V	142.0	16.3
164.587500	24.54	43.50	18.96	100.0	V	150.0	14.3
286.322500	25.69	46.00	20.31	100.0	V	134.0	19.2
391.325000	29.49	46.00	16.51	100.0	V	150.0	21.4
499.419375	31.72	46.00	14.28	100.0	V	356.0	23.9
977.205000	34.56	53.50	18.94	100.0	V	213.0	30.7

Remark:
Corrected Amplitude = Read level + Corrector factor
Above 1GHz: Corrector factor = Antenna Factor + Cable Loss- Amplifier Gain
Below 1GHz: Corrector factor = Antenna Factor + Cable Loss
(The Reading Level is recorded by software which is not shown in the sheet)

TÜV SÜD Certification and Testing (China) Co., Ltd. Shenzhen Branch
Building 12&13, Zhiheng Wisdomland Business Park, Nantou Checkpoint Road 2, Nanshan District,
Shenzhen City, 518052, P. R. China Tel. +86 755 8828 6998, Fax: +86 755 8828 5299

Radiated Emission

Product Type	:	Wearable on Neck Host
M/N	:	3BOX A2
Operating Condition	:	Normal Working with VR (Playing 1KHz Video)
Ant. Polarity	:	Horizontal
Comment	:	30-1000MHz

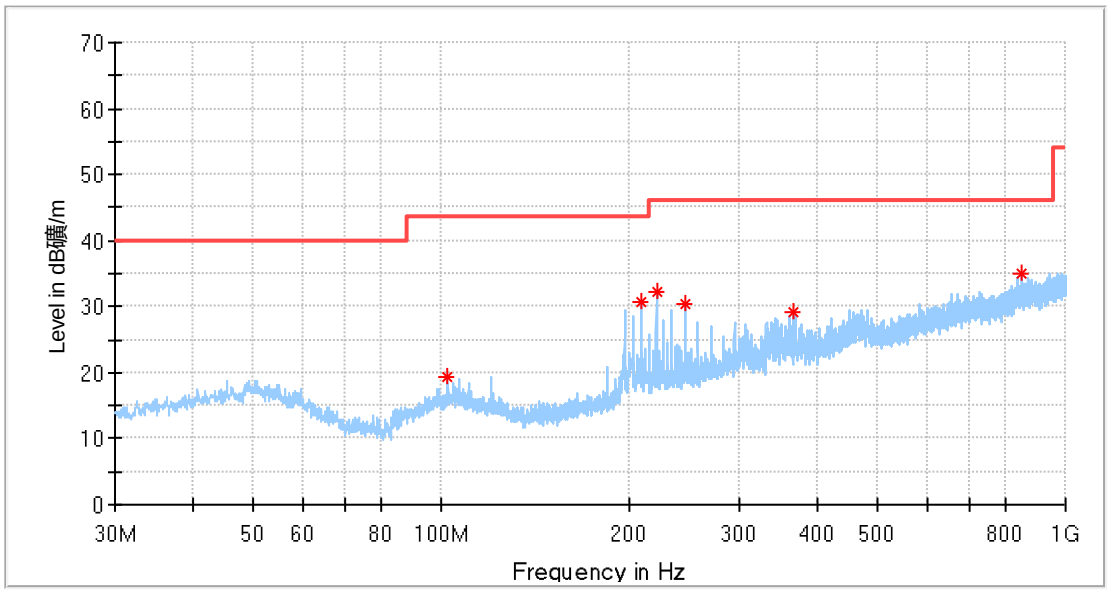

Frequency (MHz)	MaxPeak (dBµV/m)	Limit (dBµV/m)	Margin (dB)	Height (cm)	Pol	Azimuth (deg)	Corr. (dB)
102.446875	19.21	43.50	24.29	200.0	H	0.0	15.8
208.783125	30.83	43.50	12.67	100.0	H	0.0	16.7
221.090000	32.15	43.50	11.35	100.0	H	0.0	17.3
245.643125	30.44	46.00	15.56	100.0	H	0.0	18.2
367.438750	29.26	46.00	16.74	100.0	H	226.0	21.6
847.528125	34.86	46.00	11.14	100.0	H	242.0	29.2

Remark:
Corrected Amplitude = Read level + Corrector factor
Above 1GHz: Corrector factor = Antenna Factor + Cable Loss- Amplifier Gain
Below 1GHz: Corrector factor = Antenna Factor + Cable Loss
(The Reading Level is recorded by software which is not shown in the sheet)

TÜV SÜD Certification and Testing (China) Co., Ltd. Shenzhen Branch
Building 12&13, Zhiheng Wisdomland Business Park, Nantou Checkpoint Road 2, Nanshan District,
Shenzhen City, 518052, P. R. China Tel. +86 755 8828 6998, Fax: +86 755 8828 5299

Radiated Emission

Product Type	:	Wearable on Neck Host
M/N	:	3BOX A2
Operating Condition	:	Normal Working with VR (Playing 1KHz Video)
Ant. Polarity	:	Vertical
Comment	:	30-1000MHz

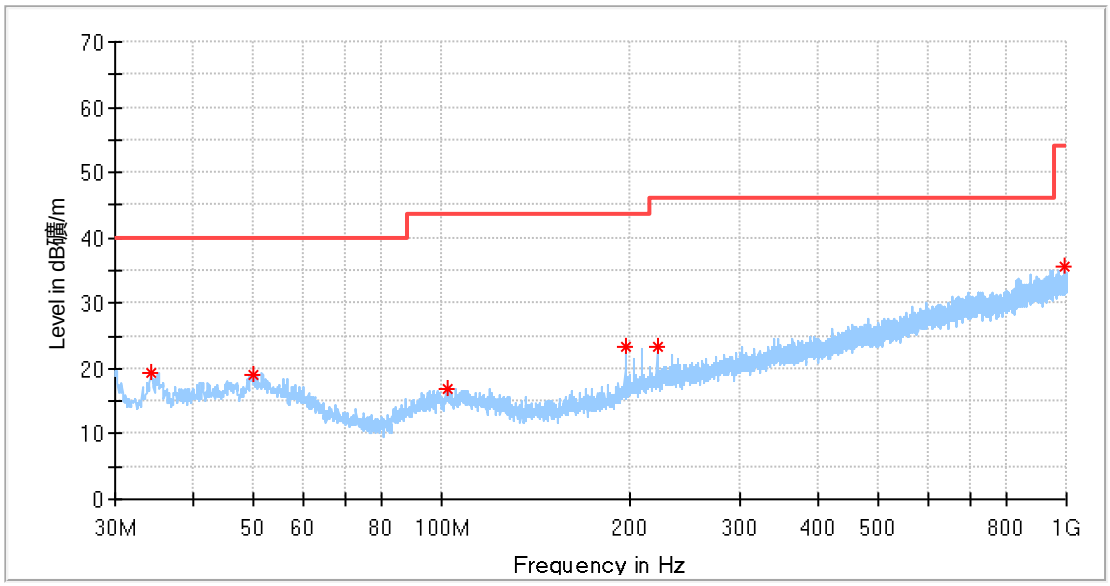

Frequency (MHz)	MaxPeak (dBµV/m)	Limit (dBµV/m)	Margin (dB)	Height (cm)	Pol	Azimuth (deg)	Corr. (dB)
34.243750	19.24	40.00	20.76	100.0	V	322.0	14.9
49.945625	19.08	40.00	20.92	100.0	V	140.0	18.2
101.901250	16.89	43.50	26.61	100.0	V	0.0	15.8
196.476250	23.20	43.50	20.3	200.0	V	304.0	15.9
221.029375	23.18	43.50	20.32	200.0	V	311.0	17.2
994.846875	35.69	46.00	10.31	200.0	V	0.0	31.4

Remark:
Corrected Amplitude = Read level + Corrector factor
Above 1GHz: Corrector factor = Antenna Factor + Cable Loss- Amplifier Gain
Below 1GHz: Corrector factor = Antenna Factor + Cable Loss
(The Reading Level is recorded by software which is not shown in the sheet)

TÜV SÜD Certification and Testing (China) Co., Ltd. Shenzhen Branch
Building 12&13, Zhiheng Wisdomland Business Park, Nantou Checkpoint Road 2, Nanshan District,
Shenzhen City, 518052, P. R. China Tel. +86 755 8828 6998, Fax: +86 755 8828 5299

Radiated Emission

Product Type	:	Wearable on Neck Host
M/N	:	3BOX A2
Operating Condition	:	Normal working (Playing 1KHZ Video) with BT/WIFI traffic
Ant. Polarity	:	Horizontal
Comment	:	1GHz-6GHz

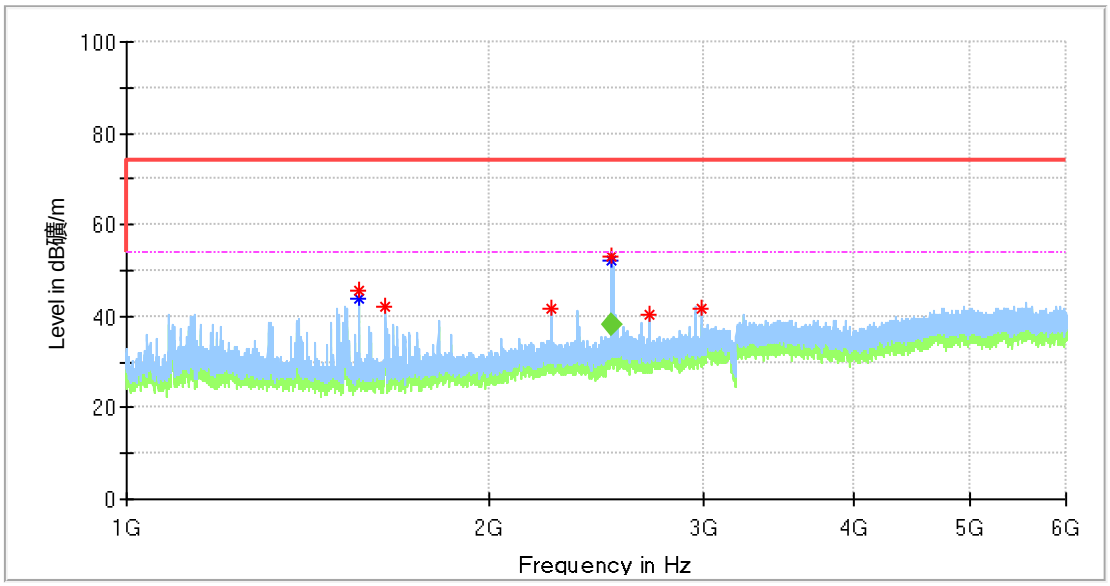

Frequency (MHz)	MaxPeak (dBµV/m)	Average (dBµV/m)	Limit (dBµV/m)	Margin (dB)	Height (cm)	Pol	Azimuth (deg)	Corr. (dB)
1556.875000	45.72	---	74.00	28.28	100.0	H	0.0	-13.1
1556.875000	---	44.01	54.00	9.99	100.0	H	0.0	-13.1
1637.083333	42.22	---	74.00	31.78	100.0	H	0.0	-12.6
2244.791667	41.87	---	74.00	32.13	100.0	H	331.0	-8.9
2525.000000	52.85	---	74.00	21.15	100.0	H	358.0	-6.6
2525.000000	---	52.35	54.00	1.65	100.0	H	358.0	-6.6
2711.250000	40.28	---	74.00	33.72	100.0	H	0.0	-6.4
2995.208333	41.88	---	74.00	32.12	100.0	H	0.0	-5.8

Remark:
Corrected Amplitude = Read level + Corrector factor
Above 1GHz: Corrector factor = Antenna Factor + Cable Loss- Amplifier Gain
Below 1GHz: Corrector factor = Antenna Factor + Cable Loss
(The Reading Level is recorded by software which is not shown in the sheet)

TÜV SÜD Certification and Testing (China) Co., Ltd. Shenzhen Branch
Building 12&13, Zhiheng Wisdomland Business Park, Nantou Checkpoint Road 2, Nanshan District,
Shenzhen City, 518052, P. R. China Tel. +86 755 8828 6998, Fax: +86 755 8828 5299

Radiated Emission

Product Type	:	Wearable on Neck Host
M/N	:	3BOX A2
Operating Condition	:	Normal working (Playing 1KHZ Video) with BT/WIFI traffic
Ant. Polarity	:	Vertical
Comment	:	1GHz-6GHz

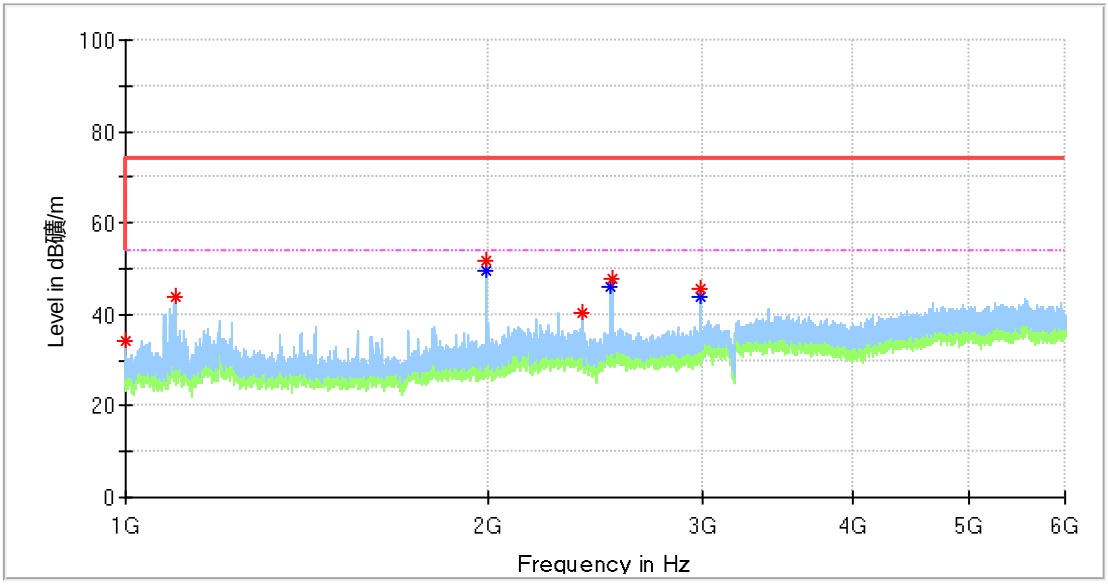

Frequency (MHz)	MaxPeak (dBµV/m)	Average (dBµV/m)	Limit (dBµV/m)	Margin (dB)	Height (cm)	Pol	Azimuth (deg)	Corr. (dB)
1000.000000	34.02	---	54.00	19.98	100.0	V	108.0	-14.4
1098.125000	44.03	---	74.00	29.97	100.0	V	157.0	-14.1
1992.083333	51.90	---	74.00	22.10	100.0	V	120.0	-11.1
1992.083333	---	49.65	54.00	4.35	100.0	V	120.0	-11.1
2389.583333	40.56	---	74.00	33.44	100.0	V	232.0	-7.8
2522.708333	---	46.02	54.00	7.98	100.0	V	0.0	-6.6
2526.250000	47.60	---	74.00	26.40	100.0	V	0.0	-6.6
2990.416667	---	43.76	54.00	10.24	100.0	V	56.0	-6.1
2990.416667	45.66	---	74.00	28.34	100.0	V	56.0	-6.1

Remark:
Corrected Amplitude = Read level + Corrector factor
Above 1GHz: Corrector factor = Antenna Factor + Cable Loss- Amplifier Gain
Below 1GHz: Corrector factor = Antenna Factor + Cable Loss
(The Reading Level is recorded by software which is not shown in the sheet)

TÜV SÜD Certification and Testing (China) Co., Ltd. Shenzhen Branch
Building 12&13, Zhiheng Wisdomland Business Park, Nantou Checkpoint Road 2, Nanshan District,
Shenzhen City, 518052, P. R. China Tel. +86 755 8828 6998, Fax: +86 755 8828 5299

Radiated Emission

Product Type	:	Wearable on Neck Host
M/N	:	3BOX A2
Operating Condition	:	Normal working (Playing 1KHZ Video) with BT/WIFI traffic
Ant. Polarity	:	Horizontal
Comment	:	6GHz-18GHz

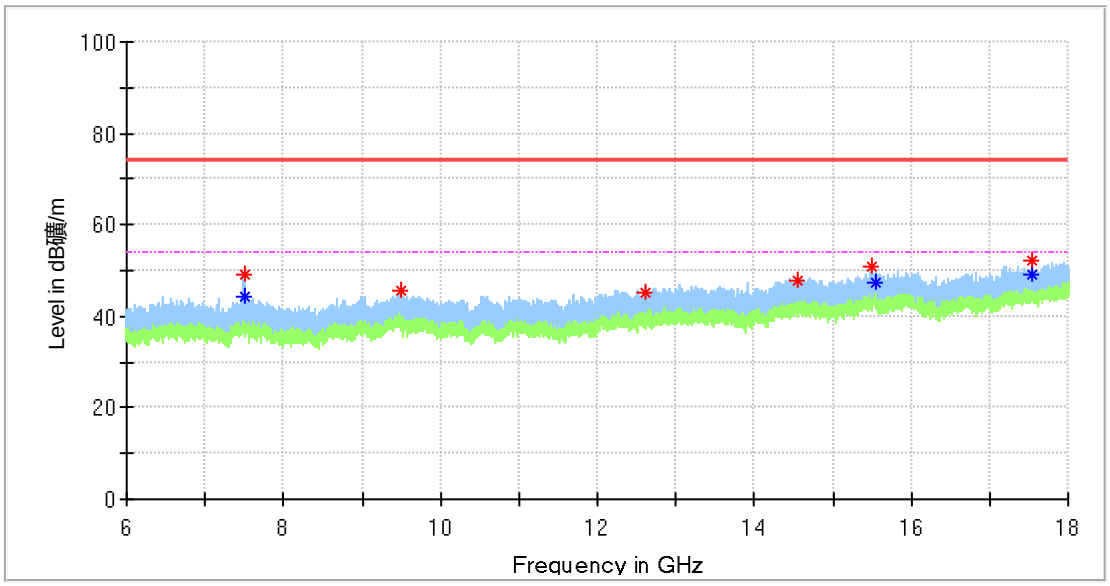

Frequency (MHz)	MaxPeak (dBµV/m)	Average (dBµV/m)	Limit (dBµV/m)	Margin (dB)	Height (cm)	Pol	Azimuth (deg)	Corr. (dB)
7494.000000	48.99	---	74.00	25.01	100.0	H	0.0	4.4
7494.000000	---	44.39	54.00	9.61	100.0	H	0.0	4.4
9498.000000	45.42	---	74.00	28.58	100.0	H	46.0	7.0
12621.500000	45.17	---	74.00	28.83	100.0	H	128.0	10.3
14560.000000	47.96	---	74.00	26.04	100.0	H	0.0	14.0
15497.500000	50.72	---	74.00	23.28	100.0	H	0.0	15.5
15538.000000	---	47.51	54.00	6.49	100.0	H	241.0	15.6
17528.500000	52.17	---	74.00	21.83	100.0	H	73.0	17.2
17536.000000	---	49.08	54.00	4.92	100.0	H	0.0	17.1

Remark:
Corrected Amplitude = Read level + Corrector factor
Above 1GHz: Corrector factor = Antenna Factor + Cable Loss- Amplifier Gain
Below 1GHz: Corrector factor = Antenna Factor + Cable Loss
(The Reading Level is recorded by software which is not shown in the sheet)

TÜV SÜD Certification and Testing (China) Co., Ltd. Shenzhen Branch
Building 12&13, Zhiheng Wisdomland Business Park, Nantou Checkpoint Road 2, Nanshan District,
Shenzhen City, 518052, P. R. China Tel. +86 755 8828 6998, Fax: +86 755 8828 5299

Radiated Emission

Product Type	:	Wearable on Neck Host
M/N	:	3BOX A2
Operating Condition	:	Normal working (Playing 1KHZ Video) with BT/WIFI traffic
Ant. Polarity	:	Vertical
Comment	:	6GHz-18GHz

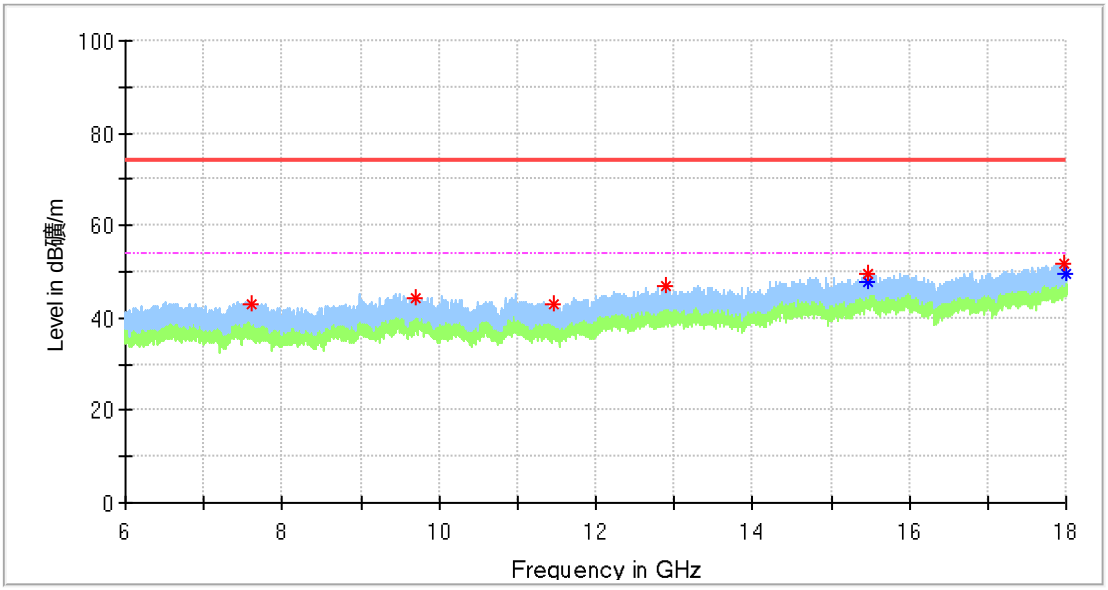

Frequency (MHz)	MaxPeak (dBµV/m)	Average (dBµV/m)	Limit (dBµV/m)	Margin (dB)	Height (cm)	Pol	Azimuth (deg)	Corr. (dB)
7619.500000	43.02	---	74.00	30.98	100.0	V	241.0	4.0
9712.500000	44.19	---	74.00	29.81	100.0	V	355.0	6.6
11461.000000	42.91	---	74.00	31.09	100.0	V	0.0	6.7
12889.000000	47.07	---	74.00	26.93	100.0	V	0.0	10.6
15469.000000	49.70	---	74.00	24.30	100.0	V	25.0	15.3
15484.000000	---	47.85	54.00	6.15	100.0	V	325.0	15.4
17981.500000	51.62	---	74.00	22.38	100.0	V	0.0	18.4
17989.000000	---	49.51	54.00	4.49	100.0	V	118.0	18.4

Remark:
Corrected Amplitude = Read level + Corrector factor
Above 1GHz: Corrector factor = Antenna Factor + Cable Loss- Amplifier Gain
Below 1GHz: Corrector factor = Antenna Factor + Cable Loss
(The Reading Level is recorded by software which is not shown in the sheet)

Note: Testing is carried out with frequency rang 30MHz to 40GHz, which above 18GHz are attenuated more than 20dB below the permissible limits or the field strength is too small to be measured.

TÜV SÜD Certification and Testing (China) Co., Ltd. Shenzhen Branch
Building 12&13, Zhiheng Wisdomland Business Park, Nantou Checkpoint Road 2, Nanshan District,
Shenzhen City, 518052, P. R. China Tel. +86 755 8828 6998, Fax: +86 755 8828 5299

10. Test Equipment List

Radiated Emission Test

DESCRIPTION	MANUFACTURER	MODEL NO.	SERIAL NO.	CAL. DUE DATE
EMI Test Receiver	Rohde & Schwarz	ESR 26	101269	2020-6-28
Trilog Super Broadband Test Antenna	Schwarzbeck	VULB 9163	707	2020-6-28
Horn Antenna	Rohde & Schwarz	HF907	102294	2020-6-22
Loop Antenna	Rohde & Schwarz	HFH2-Z2	100398	2020-7-7
Pre-amplifier	Rohde & Schwarz	SCU 18	102230	2020-6-28
Signal Generator	Rohde & Schwarz	SMY01	839369/005	2020-6-28
Attenuator	Agilent	8491A	MY39264334	2020-6-28
3m Semi-anechoic chamber	TDK	9X6X6	----	2020-7-7

Conducted Emission Test

Description	Manufacturer	Model no.	Serial no.	cal. due date
EMI Test Receiver	Rohde & Schwarz	ESR 3	101782	2020-6-28
LISN	Rohde & Schwarz	ENV432	101318	2020-3-20
Attenuator	Shanghai Huaxiang	TS2-26-3	080928189	2020-6-28
Test software	Rohde & Schwarz	EMC32	Version9.15.00	N/A

TÜV SÜD Certification and Testing (China) Co., Ltd. Shenzhen Branch
Building 12&13, Zhiheng Wisdomland Business Park, Nantou Checkpoint Road 2, Nanshan District,
Shenzhen City, 518052, P. R. China Tel. +86 755 8828 6998, Fax: +86 755 8828 5299

11. Measurement System Uncertainty

For a 95% confidence level, the measurement expanded uncertainties for defined systems, in accordance with the recommendations of ISO 17025 were:

System Measurement Uncertainty	
Items	**Extended Uncertainty**
Uncertainty for Radiated Spurious Emission 25MHz-3000MHz	Horizontal: 4.91dB; Vertical: 4.89dB;
Uncertainty for Radiated Spurious Emission 3000MHz-18000MHz	Horizontal: 4.80dB; Vertical: 4.79dB;
Uncertainty for Radiated Spurious Emission 18000MHz-40000MHz	Horizontal: 5.05dB; Vertical: 5.04dB;
Uncertainty for Conducted Emission 150kHz-30MHz	3.21dB

THE END

TÜV SÜD Certification and Testing (China) Co., Ltd. Shenzhen Branch
Building 12&13, Zhiheng Wisdomland Business Park, Nantou Checkpoint Road 2, Nanshan District,
Shenzhen City, 518052, P. R. China Tel. +86 755 8828 6998, Fax: +86 755 8828 5299