FCC CERTIFICATION TEST REPORT

Report No.: DDT-B21090104-2E11

Applicant	:	Powervision Tech Inc.
Address	:	Zone E,Ocean Venture Valley,No.40, Yangguang Rd, Nanhai new District,Weihai,Shandong,China
Equipment under Test	:	PowerVision S1
Model No.	:	PVS10
Trade Mark	:	PowerVision
FCC ID	:	2AKBMPVS12
Manufacturer	:	Powervision Tech Inc.
Address	:	Zone E,Ocean Venture Valley,No.40, Yangguang Rd, Nanhai new District,Weihai,Shandong,China

Issued By: Tianjin Dongdian Testing Service Co., Ltd.

Address: No.19, Weisi Road, MIP, Develop Area, Tianjin, China, 300385
Tel: +86-22-58038033, **E-mail:** ddt@dgddt.com, http://www.dgddt.com

REPORT

TABLE OF CONTENTS

Test report declares....3
1 Summary of test results 5
2 General test information.... 6
2.1. Description of EUT 6
2.2. Accessories of EUT 7
2.3. Assistant equipment used for test.... 7
2.4. Block diagram of EUT configuration for test.... 7
2.5. Deviations of test standard 7
2.6. Test environment conditions.... 7
2.7. Test laboratory 7
2.8. Measurement uncertainty 7
3 Equipment used during test 9
4 20dB Bandwidth 10
4.1. Block diagram of test setup 10
4.2. Limits 10
4.3. Test Procedure.... 10
4.4. Test Result 10
4.5. Original test data 11
5 Radiated emission 12
5.1. Block diagram of test setup 12
5.2. Limit.... 13
5.3. Test Procedure.... 13
5.4. Test result.... 14
6 Power Line Conducted Emission.... 17
6.1. Block diagram of test setup 17
6.2. Power Line Conducted Emission Limits 17
6.3. Test Procedure.... 17
6.4. Test Result 18
7 Antenna Requirements 20
8 Test setup photograph 21
9 Photos of the EUT.... 23

TEST REPORT DECLARE

Applicant	:	Powervision Tech Inc.
Address	:	Zone E,Ocean Venture Valley,No.40, Yangguang Rd, Nanhai new District,Weihai,Shandong,China
Equipment under Test	:	PowerVision S1
Model No.	:	PVS10
Trade Mark	:	PowerVision
Manufacturer	:	Powervision Tech Inc.
Address	:	Zone E,Ocean Venture Valley,No.40, Yangguang Rd, Nanhai new District,Weihai,Shandong,China

Test Standard Used:

FCC Rules and Regulations Part 15 Subpart C

Test procedure used:

ANSI C63.10:2013

We Declare:

The equipment described above is tested by Tianjin Dongdian Testing Service Co., Ltd and in the configuration tested the equipment complied with the standards specified above. The test results are contained in this test report and Tianjin Dongdian Testing Service Co., Ltd is assumed of full responsibility for the accuracy and completeness of these tests.

After test and evaluation, our opinion is that the equipment provided for test compliance with the requirement of the above FCC standards.

Report No:	DDT-B21090104-2E11		
Date of Receipt:	Sep. 01, 2021	**Date of Test:**	Sep. 01, 2021 ~ Oct. 08, 2021

Prepared By: ***Approved By:***

Sunny Zhang Aaron Zhang

天津电检检测技术服务（天津）有限公司 TIANJIN DONGDIAN TESTING SERVICE CO.,LTD. 检验检测专用章 Inspection & Testing Services

Sunny Zhang/Engineer ***Aaron Zhang/EMC Manager***

Note: This report applies to above tested sample only. This report shall not be reproduced in parts without written approval of Tianjin Dongdian Testing Service Co., Ltd.

The report must not be used by the client to claim product certification, approval, or endorsement by NVLAP, NIST, or any agency of the U.S. Government.

Revision history

Rev.	Revisions	Issue Date	Revised By
---	Initial issue	Oct. 08, 2021	

1 Summary of test results

Description of Test Item	Standard	Results
20dB Bandwidth	FCC Part 15: 15.215	PASS
Radiated Emission	FCC Part 15: 15.209	PASS
Power Line Conducted Emissions	FCC Part 15: 15.207	PASS
Antenna requirement	FCC Part 15: 15.203	PASS

2 General test information

2.1. Description of EUT

EUT* Name	:	PowerVision S1
Model Number	:	PVS10
EUT function description	:	Please refer to user manual of this device
Power supply	:	Input: DC 5V/3A; 9V2A;12V1.5A by AC/DC adapter or DC 3.85 by Polymer Li-ion built-in battery Output: 10W (Max)
Wireless charging Operation frequency	:	110 kHz - 205 kHz
Hardware Version	:	V11.02.02
Firmware Version	:	V1.5.3
Antenna Type	:	Inductive loop coil antenna
Serial Number	:	N/A

Note: EUT is the ab. of equipment under test.

2.2. Accessories of EUT

Description of Accessories	Manufacturer	Model number	Serial No.	Other
N/A	N/A	N/A	N/A	N/A

2.3. Assistant equipment used for test

Assistant equipment	Manufacturer	Model number or Type	Serial No.	Remark
Dummy load	N/A	N/A	N/A	N/A
AC/DC adapter	Huawei Technologies Co., Ltd.	HW-100400C01	YB91YCKAW08801	HUAWEI

2.4. Block diagram of EUT configuration for test

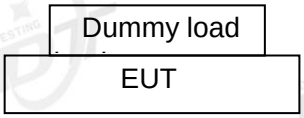

2.5. Deviations of test standard

No Deviation.

2.6. Test environment conditions

During the measurement the environmental conditions were within the listed ranges:

Temperature range:	20-28℃
Humidity range:	20-75%
Pressure range:	86-106kPa

2.7. Test laboratory

Tianjin Dongdian Testing Service Co., Ltd.

Address: No.19, Weisi Road, MIP, Develop Area, Tianjin, China, 300385

Tel: +86-22-58038033, http://www.dgddt.com, Email: ddt@dgddt.com

NVLAP (National Voluntary Laboratory Accreditation Program) CODE: 500036-0

CNAS（China National Accreditation Service for Conformity Assessment）CODE: L13402

FCC Designation Number: CN5004; FCC Test Firm Registration Number: 368676

2.8. Measurement uncertainty

Test Item	Uncertainty
Uncertainty for Conduction emission test	2.32dB (150kHz-30MHz)
	2.72dB (9kHz-150kHz)
Uncertainty for Radiation Emission test (30MHz-1GHz)	2.72 dB (Antenna Polarize: V)
	2.72 dB (Antenna Polarize: H)
Uncertainty for Radiation Emission test (1GHz to 18GHz)	2.74dB(1-6GHz)
	2.72dB (6GHz-18GHz)
Bandwidth	0.14%
Note: This uncertainty represents an expanded uncertainty expressed at approximately the 95% confidence level using a coverage factor of k=2.	

3 Equipment used during test

Equipment	Manufacturer	Model No.	Serial No.	Last Cal.	Cal. Interval
RF Connected Test (MWRFtest system)					
Microwave Signal Generator	R&S	SMF100A	101396	2021/06/08	1 Year
MXG Vector Signal Generator	Agilent	N5182A	MY50143288	2021/03/08	1 Year
EMI Test Receiver	R&S	ESU26	100243	2021/03/03	1 Year
Wideband Radio Communication Tester	R&S	CMW500	158800	2021/05/25	1 Year
Power Detector	MWRFtest	MW100-PSB	MW201203008	2021/03/31	1 Year
DC Power Supply	inSTEK	PSP-2010	EH131319	2021/02/27	1 Year
MULTIMETER	FLUKE	15B+	44752963WS	2020/11/18	1 Year
High and low temperature damp heat test chamber	Tinghua	RCR1000-060SE	THS20202015	2021/07/07	1 Year
Test Software	MWRFtest	MTS8310	V03	N/A	N/A
Radiated Emission -10m EMI Chamber					
EXA Signal Analyzer	Keysight	N9010A	MY53281492	2021/03/31	1 Year
Active Loop Antenna	R&S	HFH2-Z2	100269	2021/05/08	1 Year
Double-Ridged Guide Horn Antenna	ETS-LINDGREN	3115	00102808	2021/03/16	1 Year
Broad Band Horn Antenna	Schwarzbeck	BBHA 9170	790	2021/04/21	1 Year
Low noise amplifier	MITEQ	TPA0118-36	0914	2021/02/03	1 Year
EMI Test Receiver	R&S	ESCI	101024	2021/03/03	1 Year
EMI Test Receiver	R&S	ESCI	101030	2021/05/15	1 Year
Bilog Antenna	TESEQ	CBL6112D	29068	2020/10/12	2 Year
Bilog Antenna	TESEQ	CBL6112D	29069	2020/10/12	2 Year
Amplifier	Sonoma	310N	300913	2021/03/03	1 Year
Amplifier	Sonoma	310N	300914	2021/03/03	1 Year
Ant Mast	Innco	MA4000	N/A	N/A	N/A
Ant Mast	Innco	MA4000	N/A	N/A	N/A
Mast Controller	Innco	CO2000	N/A	N/A	N/A
Mast Controller	Innco	CO2000	N/A	N/A	N/A
RF Selector 4CH	TOYO	NS4904N	Selector1	N/A	N/A
RF Selector 4CH	TOYO	NS4904N	Selector2	N/A	N/A
Test software	TOYO	EP5/RSE	Ver 1.9.1	N/A	N/A
Test software	Audix	E3	V 6.11111b	N/A	N/A
Power Line Conducted Emissions Test					
Test Receiver	R&S	ESCI	101397	2021/03/03	1 Year
LISN	R&S	ENV216	101122	2021/03/31	1 Year
Test software	TOYO	EP5/CE	V 5.4.40	N/A	N/A

4 20dB Bandwidth

4.1. Block diagram of test setup

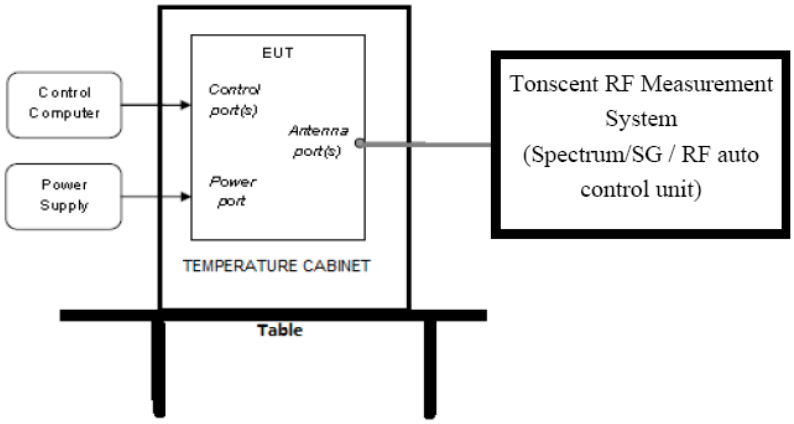

4.2. Limits

Intentional radiators operating under the alternative provisions to the general emission limits, as contained in § 15.217 through 15.257 and in Subpart E of this part, must be designed to ensure that the 20 dB bandwidth of the emission, or whatever bandwidth may otherwise be specified in the specific rule section under which the equipment operates, is contained within the frequency band designated in the rule section under which the equipment is operated.

4.3. Test Procedure

(1) Connect EUT's antenna output to spectrum analyzer by RF cable.

(2) The bandwidth of the fundamental frequency was measured by spectrum analyzer with 300Hz RBW and 1 kHz VBW. The 20dB bandwidth is defined as the total spectrum the power of which is higher than peak power minus 20dB.

4.4. Test Result

Freq. (kHz)	20dB bandwidth Result (kHz)	Conclusion
130.43	0.780	PASS

4.5. Original test data

Graphs

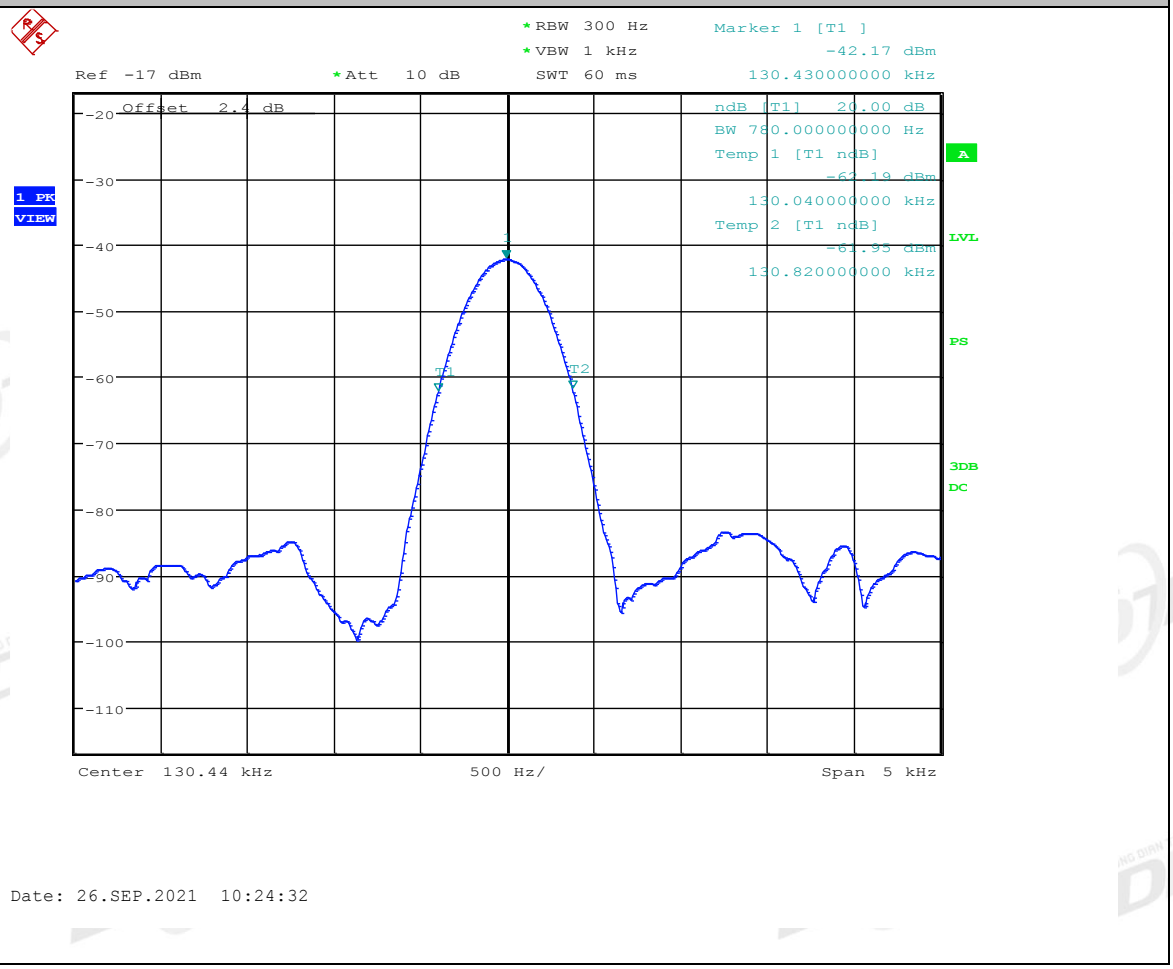

5 Radiated emission

5.1. Block diagram of test setup

In 3m Anechoic Chamber Test Setup Diagram for 9kHz~30MHz

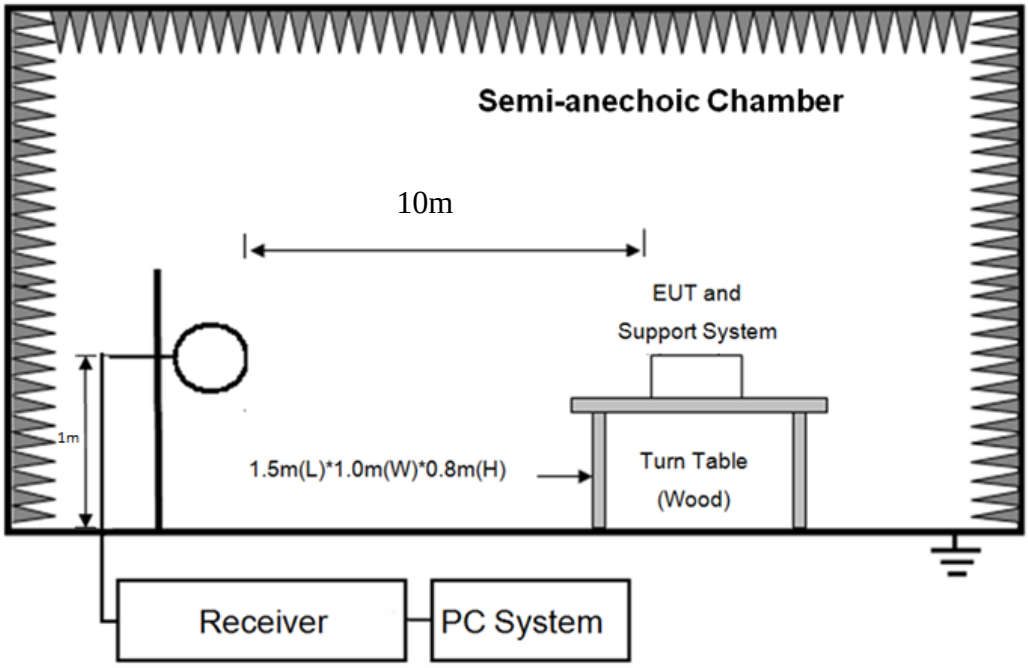

In 3m Anechoic Chamber Test Setup Diagram for 30MHz~1GHz

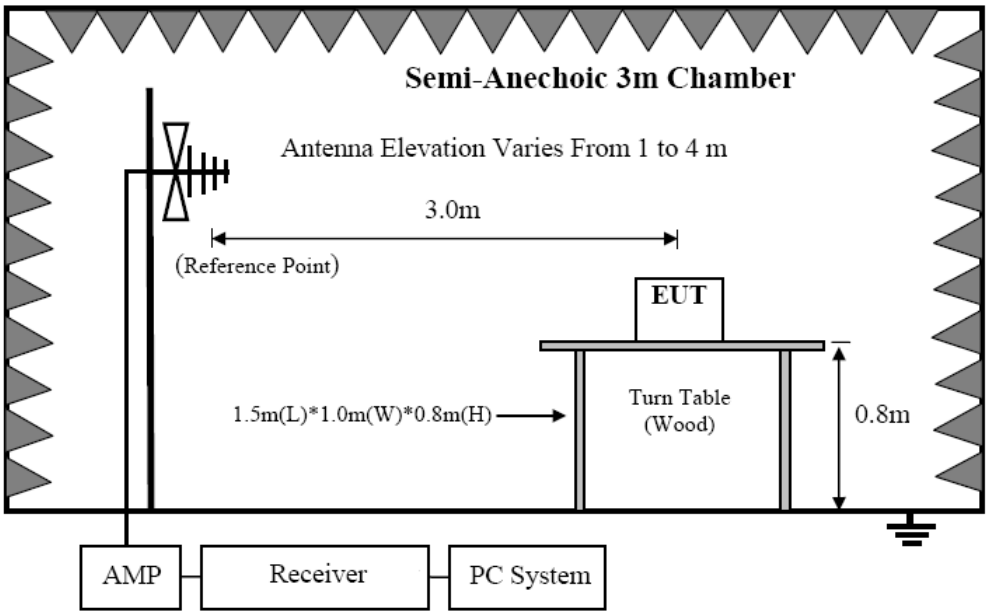

5.2. Limit

FREQUENCY MHz	DISTANCE Meters	FIELD STRENGTHS LIMIT	
		μV/m	dB(μV)/m
0.009 ~ 0.490	300	2400/F(kHz)	67.6-20log(F)
0.490 ~ 1.705	30	24000/F(kHz)	87.6-20log(F)
1.705 ~ 30.0	30	30	29.54
30 ~ 88	3	100	40.0
88 ~ 216	3	150	43.5
216 ~ 960	3	200	46.0
960 ~ 1000	3	500	54.0

Note: (1)The emission limits shown in the above table are based on measurements employing a CISPR QP detector except for the frequency bands 9-90kHz, 110-490kHz and above 1000MHz.Radiated emissions limits in these three bands are based on measurements employing an average detector.

(2) At frequencies below 30MHz, measurement may be performed at a distance closer than that specified, and the limit at closer measurement distance can be extrapolated by below formula:

$Limit_{10m}$(dBuV/m)= $Limit_{300m}$(dBuV/m) + 40Log(300m/10m) = $Limit_{300m}$(dBuV/m) + 59
$Limit_{10m}$(dBuV/m)= $Limit_{30m}$(dBuV/m) + 40Log(30m/10m) = $Limit_{30m}$(dBuV/m) + 19

5.3. Test Procedure

(1) EUT was placed on a non-metallic table, 80 cm above the ground plane inside a semi-anechoic chamber.

(2) Test antenna was located 10m and 3m from the EUT on an adjustable mast, and the antenna used as below table.

Test frequency range	Test antenna used	Test antenna distance
9kHz-30MHz	Active Loop antenna	10m
30MHz-1GHz	Trilog Broadband Antenna	3m

According ANSI C63.10:2013 clause 6.4.4.2 and 6,5.3, for measurements below 30 MHz, the loop antenna was positioned with its plane vertical from the EUT and rotated about its vertical axis for maximum response at each azimuth position around the EUT. And the loop antenna also be positioned with its plane horizontal at the specified distance from the EUT. The center of the loop is 1 m above the ground. for measurement above 30MHz, the Trilog Broadband Antenna or Horn Antenna was located 3m from EUT, Measurements were made with the antenna positioned in both the horizontal and vertical planes of Polarization, and the measurement antenna was varied from 1 m to 4 m. in height above the reference ground plane to obtain the maximum signal strength.

(3) Below pre-scan procedure was first performed in order to find prominent frequency spectrum radiated emissions from 9kHz to 1GHz:

(a) Scanning the peak frequency spectrum with the antenna specified in step (3), and the EUT

was rotated 360 degree, the antenna height was varied from 1m to 4m(Except loop antenna, it's fixed 1m above ground.)

(b) Change work frequency or channel of device if practicable.

(c) Change modulation type of device if practicable.

(d) Rotated EUT though three orthogonal axes to determine the attitude of EUT arrangement produces highest emissions. Spectrum frequency from 9kHz to 1GHz (tenth harmonic of fundamental frequency) was investigated.

(4) For final emissions measurements at each frequency of interest, the EUT was rotated and the antenna height was varied between 1m and 4m in order to maximize the emission. Measurements in both horizontal and vertical polarities were made and the data was recorded. In order to find the maximum emission, the relative positions of equipment and all of the interface cables were changed according to ANSI C63.10:2013 on Radiated Emission test.

(5) The emissions from 9kHz to 1GHz were measured based on CISPR QP detector except for the frequency bands 9-90kHz, 110-490kHz, for emissions from 9kHz-90kHz,110kHz-490kHz and above 1GHz were measured based on average detector, for emissions above 1GHz, peak emissions also be measured and need comply with Peak limit.

(6) The emissions from 9kHz to 1GHz, QP or average values were measured with EMI receiver with below RBW.

Frequency band	RBW
9kHz-150kHz	200Hz
150kHz-30MHz	9kHz
30MHz-1GHz	120kHz

5.4. Test result

PASS. (See below detailed test result)

Below 30MHz:

Frequency (MHz)	Result@**10m** (dBuV/m)	Limit @**10m** (dBuV/m)	Detector	Conclusion
0.0186	68.97	101.32	Peak	PASS
0.0847	50.82	88.19	Peak	PASS
0.121	73.82	85.12	Peak	PASS
0.122	72.87	85.05	Peak	PASS
0.125	71.72	84.84	Peak	PASS
0.127	67.46	84.68	Peak	PASS
0.129	71.07	84.54	Peak	PASS
0.131	70.19	84.42	Peak	PASS
0.146	65.79	83.49	Peak	PASS
0.149	66.15	83.30	Peak	PASS
23.28	45.09	48.54	Peak	PASS
29.00	44.69	48.54	Peak	PASS

Above 30MHz:

Radiated Emission Test Result

Test Site	: 10m Chamber		
Test Date	: 2021-09-24	**Tested By**	: Sunny
EUT	: Powervision S1	**Model Number**	: PVS10
Power Supply	: Battery	**Test Mode**	: Wireless charging mode
Condition	: Temp:23.4℃,Humi:50%,Press:101.8kPa		
Memo	:		

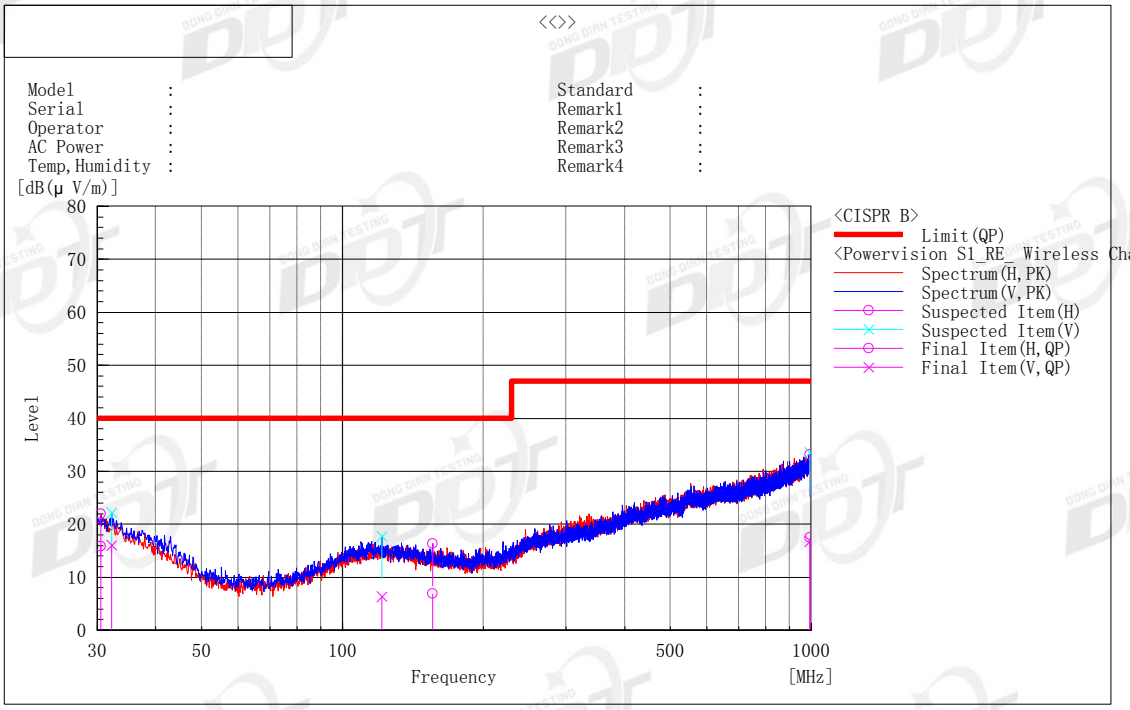

Final Result

No.	Frequency [MHz]	(P)	Reading QP [dB(μV)]	c.f [dB(1/m)]	Result QP [dB(μV/m)]	Limit QP [dB(μV/m)]	Margin QP [dB]	Height [cm]	Angle [°]	System	Remark
1	30.485	H	20.9	-5.1	15.8	40.0	24.2	223.0	275.3	1	
2	155.494	H	18.5	-11.6	6.9	40.0	33.1	187.0	15.2	1	
3	992.725	H	9.6	7.9	17.5	47.0	29.5	185.0	4.2	1	
4	32.183	V	22.2	-6.1	16.1	40.0	23.9	187.0	345.2	2	
5	121.301	V	16.6	-10.2	6.4	40.0	33.6	263.0	112.3	2	
6	991.876	V	9.7	7.1	16.8	47.0	30.2	191.0	108.6	2	

Note) Receiving antenna polarization : Horizontal and/or Vertical
Test Distance : 3 m, Antenna Height : 1 m to 4 m
Level QP (Quasi-Peak) = Reading QP + Factor (Antenna Factor + Cable Loss - Amp. Gain)
Margin QP (Quasi-Peak) = Limit – Level QP

Radiated Emission Test Result

Test Site	: 10m Chamber		
Test Date	: 2021-09-24	**Tested By**	: Sunny
EUT	: Powervision S1	**Model Number**	: PVS10
Power Supply	: AC 120V/60Hz	**Test Mode**	: Charging + Wireless charging mode
Condition	: Temp:23.4℃,Humi:50%,Press:101.8kPa		
Memo	:		

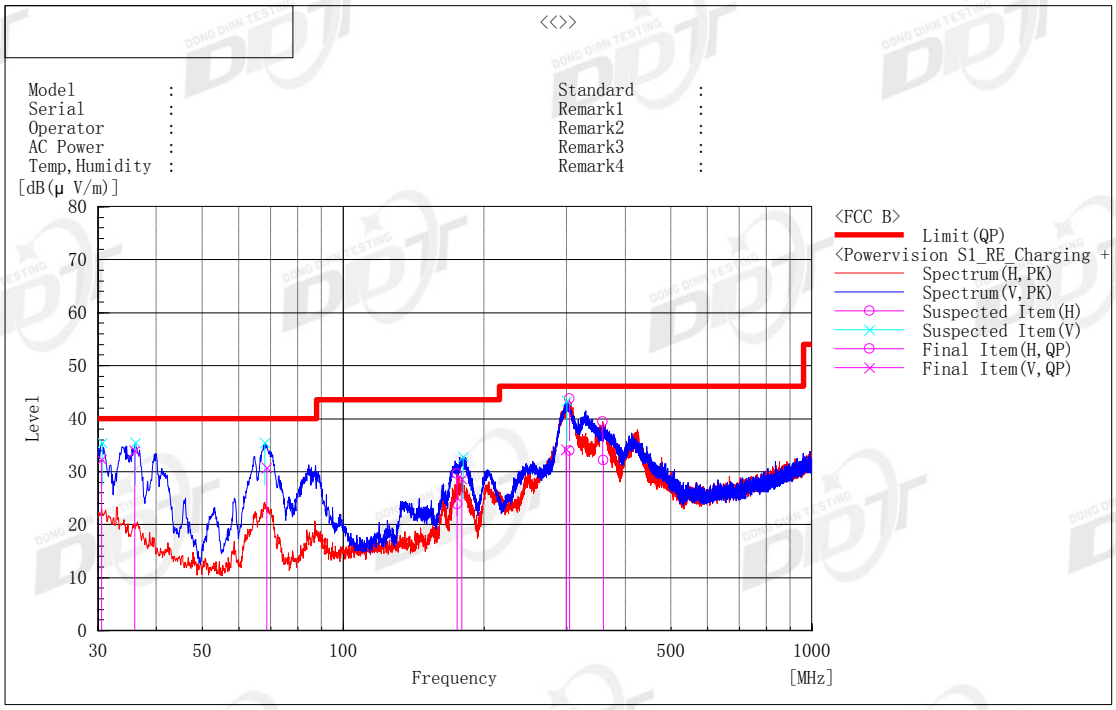

Final Result

No.	Frequency [MHz]	(P)	Reading QP [dB(μV)]	c.f [dB(1/m)]	Result QP [dB(μV/m)]	Limit QP [dB(μV/m)]	Margin QP [dB]	Height [cm]	Angle [°]	System	Remark
1	175.229	H	36.0	-12.1	23.9	43.5	19.6	185.0	99.5	1	
2	303.513	H	40.9	-6.9	34.0	46.0	12.0	136.0	50.1	1	
3	358.431	H	37.0	-4.9	32.1	46.0	13.9	133.0	43.4	1	
4	30.454	V	37.2	-5.0	32.2	40.0	7.8	100.0	74.1	2	
5	35.925	V	42.0	-8.1	33.9	40.0	6.1	101.0	312.8	2	
6	68.591	V	47.5	-16.7	30.8	40.0	9.2	192.0	282.3	2	
7	179.336	V	40.7	-12.1	28.6	43.5	14.9	116.0	242.8	2	
8	298.630	V	41.2	-7.0	34.2	46.0	11.8	107.0	192.8	2	

Note) Receiving antenna polarization : Horizontal and/or Vertical
Test Distance : 3 m, Antenna Height : 1 m to 4 m
Level QP (Quasi-Peak) = Reading QP + Factor (Antenna Factor + Cable Loss - Amp. Gain)
Margin QP (Quasi-Peak) = Limit – Level QP

6 Power Line Conducted Emission

6.1. Block diagram of test setup

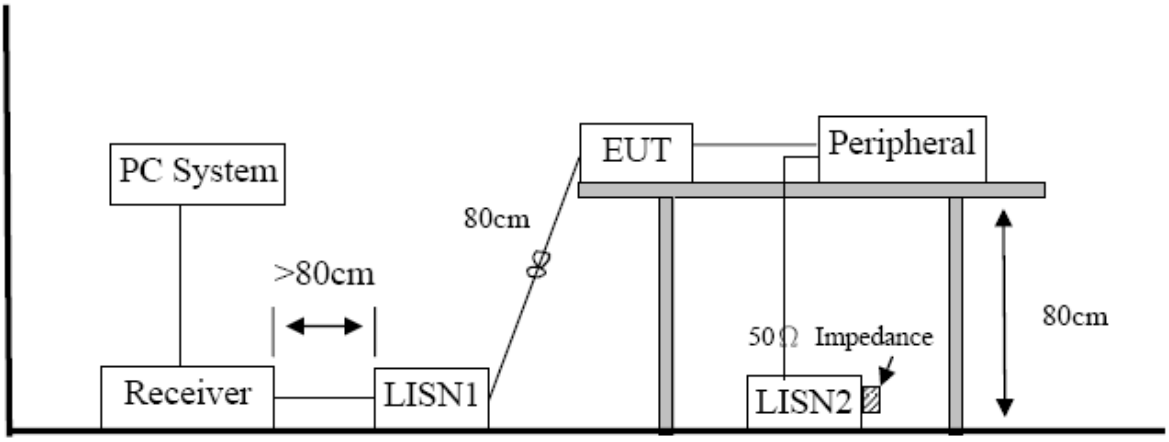

6.2. Power Line Conducted Emission Limits

Frequency	Quasi-Peak Level dB(μV)	Average Level dB(μV)
150kHz ~ 500kHz	66 ~ 56*	56 ~ 46*
500kHz ~ 5MHz	56	46
5MHz ~ 30MHz	60	50

Note 1: * Decreasing linearly with logarithm of frequency.

Note 2: The lower limit shall apply at the transition frequencies.

6.3. Test Procedure

The EUT and Support equipment, if needed, were put placed on a non-metallic table, 80cm above the ground plane.

Configuration EUT to simulate typical usage as described in clause 2.4 and test equipment as described in clause 10.2 of this report.

All I/O cables were positioned to simulate typical actual usage as per ANSI C63.10.

All support equipment power received from a second LISN.

Emissions were measured on each current carrying line of the EUT using an EMI Test Receiver connected to the LISN powering the EUT.

The Receiver scanned from 150 kHz to 30MHz for emissions in each of the test modes.

During the above scans, the emissions were maximized by cable manipulation.

The test mode(s) described in clause 2.4 were scanned during the preliminary test.

After the preliminary scan, we found the test mode producing the highest emission level.

The EUT configuration and worse cable configuration of the above highest emission levels were recorded for reference of the final test.

EUT and support equipment were set up on the test bench as per the configuration with highest emission level in the preliminary test.

A scan was taken on both power lines, Neutral and Line, recording at least the six highest emissions.

Emission frequency and amplitude were recorded into a computer in which correction factors were used to calculate the emission level and compare reading to the applicable limit.

The test data of the worst-case condition(s) was recorded.

The bandwidth of test receiver is set at 9 kHz.

6.4. Test Result

PASS. (See below detailed test result)

Note1: All emissions not reported below are too low against the prescribed limits.
Note2: "-----" means Peak detection; "-----" means Average detection.

Conducted Emission Test Result

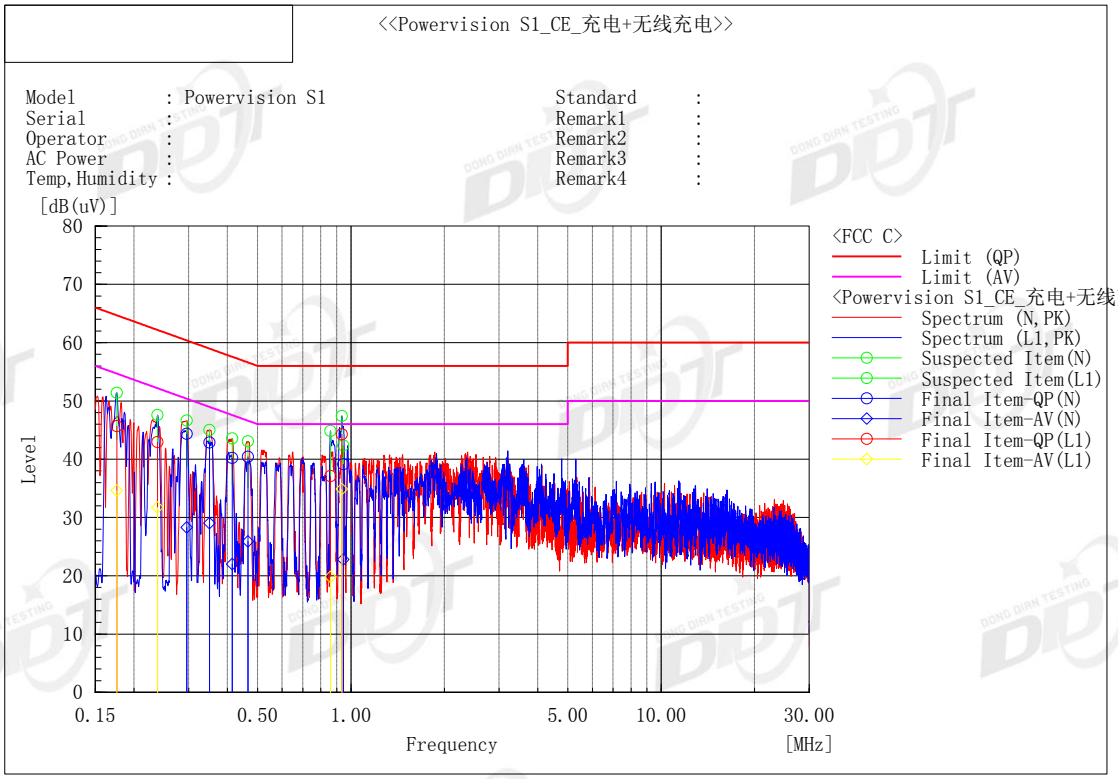

Final Result

--- N Phase ---

No.	Frequency [MHz]	Reading QP [dB(uV)]	Reading CAV [dB(uV)]	c.f [dB]	Result QP [dB(uV)]	Result CAV [dB(uV)]	Limit QP [dB(uV)]	Limit AV [dB(uV)]	Margin QP [dB]	Margin CAV [dB]
1	0.29543	34.7	18.6	9.7	44.4	28.3	60.4	50.4	16.0	22.1
2	0.35004	33.1	19.3	9.7	42.8	29.0	59.0	49.0	16.2	20.0
3	0.41445	30.5	12.3	9.7	40.2	22.0	57.6	47.6	17.4	25.6
4	0.46541	30.7	16.2	9.7	40.4	25.9	56.6	46.6	16.2	20.7
5	0.94487	29.3	13.0	9.8	39.1	22.8	56.0	46.0	16.9	23.2

--- L1 Phase ---

No.	Frequency [MHz]	Reading QP [dB(uV)]	Reading CAV [dB(uV)]	c.f [dB]	Result QP [dB(uV)]	Result CAV [dB(uV)]	Limit QP [dB(uV)]	Limit AV [dB(uV)]	Margin QP [dB]	Margin CAV [dB]
1	0.17595	36.0	24.9	9.7	45.7	34.6	64.7	54.7	19.0	20.1
2	0.23787	33.2	22.0	9.7	42.9	31.7	62.2	52.2	19.3	20.5
3	0.9343	34.6	25.1	9.7	44.3	34.8	56.0	46.0	11.7	11.2
4	0.85878	27.4	10.1	9.7	37.1	19.8	56.0	46.0	18.9	26.2

Note1) Level (Quasi-Peak and/or C/Average) = Meter Reading + Factor

Note2) Line = Polarity of input power (Live or Neutral)

N : Abbreviation of Neutral Polarity, L1 : Abbreviation of Live Polarity,

Note3) Factor = LISN Insertion Loss + Cable Loss

Note4) Margin = Limit – Level (Quasi-Peak and/or C/Average)

Note5) C/Average : Abbreviation of CISPR Average

7 Antenna Requirements

For intentional device, according to FCC 47 CFR Section 15.203, An intentional radiator shall be designed to ensure that no antenna other than that furnished by the responsible party shall be used with the device. The use of a permanently attached antenna or of an antenna that uses a unique coupling to the intentional radiator shall be considered sufficient to comply with the provisions of this section. The manufacturer may design the unit so that a broken antenna can be replaced by the user, but the use of a standard antenna jack or electrical connector is prohibited.