T E S T R E P O R T
No.: 16-1-0141801T06a-C1

According to:
FCC Regulations
Part 15.209
Part 15.247

IC-Regulations
RSS-Gen, Issue 4
RSS-247, Issue 1

for

Daimler Trucks North America

CTPMIDDTNA
ECU

FCC-ID: 2AKC8CTP054661
IC: 22221-CTP054661
PMN: CTPMIDDTNA
HVIN: CTPMIDDTNA
FVIN: 16.095.2

Laboratory Accreditation and Listings			
DAkkS Deutsche Akkreditierungsstelle D-PL-12047-01-01	MRA US-EU 0003	Industry Canada Reg. No.: 3462D-2 Reg. No.: 3462D-3	Voluntary Controls for Electromagnetic Emissions Reg. No.: R-2666 C-2914, T-1967, G-301
WiFi ALLIANCE AUTHORIZED RF LABORATORY	ctia Authorized™ Test Lab Lab Code: 20011130-00		
accredited according to DIN EN ISO/IEC 17025			

CETECOM GmbH
Laboratory Radio Communications & Electromagnetic Compatibility
Im Teelbruch 116 • 45219 Essen • Germany
Registered in Essen, Germany, Reg. No.: HRB Essen 8984
Tel.: + 49 (0) 20 54 / 95 19-954 • Fax: + 49 (0) 20 54 / 95 19-964
E-mail: info@cetecom.com • Internet: www.cetecom.com

The test results relate only to the individual items which have been tested. This report shall not be reproduced in parts without the written approval of the testing laboratory © Copyright: All rights reserved by CETECOM

Table of contents

1. SUMMARY OF TEST RESULTS ... 3

1.1. Tests measurement overview according of US CFR Title 47, Subpart 15C Standards: ... 3
1.2. Attestation: ... 4

2. ADMINISTRATIVE DATA ... 5

2.1. Identification of the testing laboratory ... 5
2.2. Test location ... 5
2.3. Organizational items ... 5
2.4. Applicant's details ... 5
2.5. Manufacturer's details ... 5

3. EQUIPMENT UNDER TEST (EUT) ... 6

3.1. Technical data of main EUT declared by applicant ... 6
3.2. EUT: Type, S/N etc. and short descriptions used in this test report ... 6
3.3. Auxiliary Equipment (AE): Type, S/N etc. and short descriptions ... 7
3.4. EUT set-ups ... 7
3.5. EUT operating modes ... 7

4. DESCRIPTION OF TEST SYSTEM SET-UP'S ... 8

4.1. Test system set-up for conducted measurements on antenna port ... 8
4.2. Test system set-up for radiated magnetic field measurements below 30 MHz ... 10
4.3. Test system set-up for radiated electric field measurement 30 MHz to 1 GHz ... 11
4.4. Test system set-up for radiated electric field measurement above 1 GHz ... 12

5. MEASUREMENT RESULTS ... 13

5.1. Duty-Cycle ... 13
5.2. Maximum peak conducted output power ... 14
5.3. RF-Parameter - Power Spectral Density ... 16
5.4. RF-Parameter - 6 dB Bandwidth and 99% occupied Bandwith ... 18
5.5. 20 dBc power specification ... 20
5.6. General Limit - Radiated field strength emissions below 30 MHz ... 22
5.7. General Limit - Radiated field strength emissions, 30 MHz - 1 GHz ... 24
5.8. General Limit - Radiated emissions, above 1 GHz ... 26
5.9. RF-Parameter - Radiated Band Edge compliance measurements ... 28
5.10. Measurement uncertainties ... 30

6. ABBREVIATIONS USED IN THIS REPORT ... 31

7. ACCREDITATION DETAILS OF CETECOM'S LABORATORIES AND TEST SITES ... 31

8. INSTRUMENTS AND ANCILLARY ... 32

8.1. Used equiment "CTC" ... 32

9. VERSIONS OF TEST REPORTS (CHANGE HISTORY) ... 35

Table of annex

	Total pages
Annex 1: Test result diagrams (separate document) **CETECOM-TR16-1-0141801T06a-C1-A1**	**43**
Annex 2: External photographs of EUT (separate document) **CETECOM-TR16-1-0141801T02a-C1-A2**	**4**
Annex 3: Internal photographs of EUT (separate document) **CETECOM-TR16-1-0141801T02a-C1-A3**	**6**
Annex 4: Test set-up photographs (separate document) **CETECOM- TR16-1-0141801T02a-C1-A4**	**7**

The listed attachments are an integral part of this report.

1. Summary of test results

The test results apply exclusively to the test samples as presented in this Report. The CETECOM GmbH does not assume responsibility for any conclusions and generalizations taken in conjunction with other specimens or samples of the type of the item presented to tests.

The test results apply exclusively to the test samples as presented in this Report. The CETECOM GmbH does not assume responsibility for any conclusions and generalizations taken in conjunction with other specimens or samples of the type of the item presented to tests. Also we refer on special conditions which the applicant should fulfill according §2.927 to §2.948, special focus regarding modification of the equipment and availability of sample equipment for market surveillance tests.
The presented Equipment Under Test (in this report, hereinafter referred as EUT) integrates a Bluetooth© LE transmitter. Other implemented wireless technologies are not considered within this test report.

Following test cases have been performed to show compliance with valid Part 15.209/15.247 of the FCC CFR Title 47 Rules, Edition 4th November 2015 standards.

1.1. Tests measurement overview according of US CFR Title 47, Subpart 15C Standards:

Test cases	Port	References & Limits			EUT set-up	EUT opera-ting mode	Result
		FCC Standard	RSS Section	Test Limit			
TX-Mode							
Timing of transmitter (pulsed operation)	Antenna Terminal or enclosure	§15.35	RSS-Gen, Issue 4, Chapter 6.10	--	1	1	for Information only
6 dB bandwidth	Antenna terminal (conducted)	§15.247(a)(2)	RSS-247, Issue 1 Chapter 5.2(1)	≥ 500 kHz for DTS systems	1	1	Pass
99% occupied bandwidth	Antenna terminal (conducted)	2.1049(h)	RSS-Gen, Issue 4, Chapter 6.6	99% Power bandwidth	1	1	for Information only
Transmitter Peak output power	Antenna terminal (conducted)	§15.247(b)(3)	RSS-247, Issue 1 Chapter 5.4(4)	1 Watt Peak	1	1	Pass
Transmitter Peak output power radiated	Enclosure + Inter-connecting cables (radiated)	§15.247(b)(4)	RSS-247, Issue 1 Chapter 5.4(4)	< 4 Watt (EIRP) for antenna with directional gain less 6dBi	2	1	Pass
Out-Of-Band RF- emissions Band-Edge emissions	Antenna terminal (conducted)	§15.247 (d)	RSS-Gen, Issue 4, Chapter 8.9	20 dBc	1	1	Pass
Power spectral density	Antenna terminal (conducted)	§15.247(e)	RSS-247, Issue 1 Chapter 5.2(2)	8dBm in any 3 kHz band	1	1	Pass
Transmitter frequency stability	Antenna terminal (conducted)	--	RSS-Gen, Issue 4, Chapter 8.11	Occupied bandwidth entirely outside restricted bands and prohibited TV bands	--	--	Not applicable

General field strength emissions + restricted bands	Enclosure + Inter-connecting cables (radiated)	§15.247 (d) §15.205 §15.209	RSS-247, Issue 1, Chapter 5.5 RSS-Gen: Issue 4: §8.9 Table 4+5+6	Emissions in restricted bands must meet the general field-strength radiated limits	2	1	Pass
AC-Power Lines Conducted Emissions	AC-Power lines	§15.207	RSS-Gen, Issue 4: Chapter 8.8 Table 3	FCC §15.107 class B limits §15.207 limits IC: Table 3, Chapter 8.8	--	--	Not applicable

Remark: --

RF-Exposure Evaluation (separation distance user to RF-radiating element greater 20cm)							
Test cases	**Port**	**References & Limits**			**EUT set-up**	**EUT opera-ting mode**	**Result**
		FCC Standard	**RSS Section**	**Test Limit**			
Radio frequency radiation exposure requirements	Cabinet + Inter-connecting cables (radiated)	§1.1310(b) §2.1091 §2.1093	RSS-102 Issue 5	**SAR-Limits FCC:** 1.1310(b)	--	--	See separate test reports **FCC:** CETECOM_TR 16-1-0141801T07d **IC:** CETECOM_TR 16-1-0141801T07dd
				RF-Field Strength Limits: FCC: "general population/ uncontrolled" environment Table 1 **IC:** Table 4	2	1	

1.2. Attestation:

I declare that all measurements were performed by me or under my supervision and that all measurements have been performed and are correct to my best knowledge and belief to Industry Canada standards. All requirements as shown in above table are met in accordance with enumerated standards.**The current version of the Test Report CETECOM_16-1-0141801T06a-C1 replaces the Test Report CETECOM_16-1-0141801T06a dated 2016-12-21. The replaced test report is herewith invalid.**

.....
Dipl.-Ing. Rachid Acharkaoui
Responsible for test section

Digital unterschrieben von Ajit Phadtare
DN: cn=Ajit Phadtare, o=CETECOM GmbH, ou=RC-EMC, email=ajit.phadtare@cetecom.com, c=DE
Datum: 2017.01.05 15:49:07 +01'00'

.....
M.Sc. Ajit Phadtare
Responsible for test report

2. Administrative Data

2.1. Identification of the testing laboratory

Company name:	CETECOM GmbH
Address:	Im Teelbruch 116 45219 Essen - Kettwig Germany
Responsible for testing laboratory:	Dipl.-Ing. Rachid Acharkaoui
Deputy:	Dipl.-Ing. Niels Jeß

2.2. Test location

2.2.1. Test laboratory "CTC"

Company name:	see chapter 2.1. Identification of the testing laboratory

2.3. Organizational items

Responsible for test report and project leader:	M.Sc. Ajit Phadtare
Receipt of EUT:	2016-12-01
Date(s) of test:	2016-12-01 - 2016-12-09
Date of report:	2017-01-04
Version of template: 13.02 ,	

2.4. Applicant's details

Applicant's name:	Daimler Trucks North America
Address:	4747 N. Channel Ave. Portland, OR 97217 U.S.A.
Contact person:	Mr. Jürgen Weber

2.5. Manufacturer's details

Manufacturer's name:	Bosch Car Multimedia Portugal, S.A.
Address:	Rua Max Grundig 35 4705-820 Braga Portugal

3. Equipment under test (EUT)

3.1. Technical data of main EUT declared by applicant

Main function	Common telematic platform		
Type	Electronic control unit		
Frequency range (US/Canada -bands)	☒ 2402 MHz (Channel 37) to 2480 MHz (Channel 39)		
Type of modulation	GFSK		
Number of channels (USA/Canada -bands)	37 - 39		
Antenna Type	☐ Integrated ☐ External, no RF- connector ☒ External, separate RF-connector		
Antenna Gain	Max. 1.7dBi gain according applicants information in 2.4 GHz band		
MAX Field strength (radiated):	90.194 dBµV/m@3m distance on nominal		
Installed options (not tested within this test report)	☒ GSM 850 and GSM 1900 Bands (USA/Canada) ☒ GSM 900 and GSM 1800 Bands (not usable in USA/Canada) ☒ W-CDMA FDD Band II and FDD Band V (USA/Canada) ☒ W-CDMA Band I and Band VIII (not usable in USA/Canada) ☒ WLAN 2.4 GHz ☒ GPS		
Power supply	☒ DC power only: 12 / 24 Volt ☒ Nominal Test Voltage : 12 Volt via real car battery		
Special EMI components	--		
EUT sample type	☐ Production	☒ Pre-Production	☐ Engineering
FCC label attached	☐ yes	☒ no	

3.2. EUT: Type, S/N etc. and short descriptions used in this test report

Short descrip-tion*)	EUT	Type	S/N serial number	HW hardware status	SW software status
EUT A	CTPMIDDTNA	ECU	2820003843	6794G05	DAIMLER_CTP_ 16.095.2
EUT B	CTPMIDDTNA	ECU	2820003846	6794G05	DAIMLER_CTP_ 16.095.2
EUT C	HCEL-AG-0184B	GSM/ GNSS Low Profile Adhesive Mount Antenna	--	--	--
EUT D	HWLAN-AX-0115A	BT/WLAN Antenna	--	--	--

*) EUT short description is used to simplify the identification of the EUT in this test report.

3.3. Auxiliary Equipment (AE): Type, S/N etc. and short descriptions

AE short descrip-tion *)	Auxiliary Equipment	Type	S/N serial number	HW hardware status	SW software status
AE 1	Main wiring long with load box	--	--	--	--
AE 2	Main wiring short	--	--	--	--
AE 3	Laptop	--	--	--	--
AE 4	USB -cable	0.3m	--	-	-
AE 5	Test Laptop	--	--	-	-

*) AE short description is used to simplify the identification of the auxiliary equipment in this test report.

3.4. EUT set-ups

EUT set-up no.*)	Combination of EUT and AE	Remarks
set. 1	EUT B + AE 2 + AE 3 + AE 4 + AE 5	Used for conducted tests
set. 2	EUT A + EUT C+ EUT D + AE1 + AE 3 + AE 4 + AE 5	Used for radiated tests

*) EUT set-up no. is used to simplify the identification of the EUT set-up in this test report.

3.5. EUT operating modes

EUT operating mode no.*1)	Description of operating modes	Additional information
op. 1	TX-Mode	With help of special test firmware a continuous traffic mode. *2)
op. 2	RX-Mode	With help of special test firmware RX-mode was set-up. *2)

*1) EUT operating mode no. is used to simplify the test report.
*2) Please refer to document “Instructions_RadioTypeApproval” version 0.2 dated 2016-12-07 for additional information regarding operating mode setup and output power levels.

4. Description of test system set-up's

4.1. Test system set-up for conducted measurements on antenna port

Conducted Set-up W1

Bluetooth Low Energy conducted RF-Setup 1 (W1 Set-up)

General description:

The EUT's RF-signal is coupled out by a suitable antenna coupling connector (1). The signal is first attenuated (2) then connected to the power meter (3) for conducted power measurements. The specific attenuation loss is determined prior to the measurement within a set-up attenuation measurement. These are then taken into account by correcting the measurement readings.

Schematic:

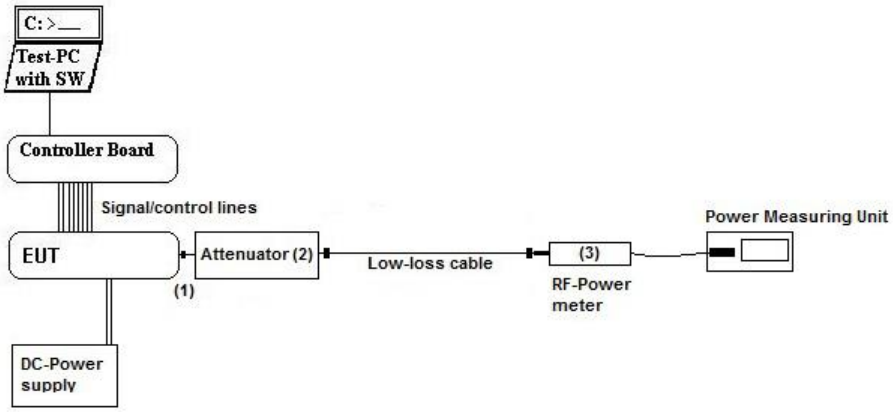

Testing method: ANSI C63.10:2013, KDB 558074 D01 DTS Meas.Guidance v03r05

Used Equipment

Passive Elements	Test Equipment	Remark:
☒ 20 dB Attenuator ☒ Low loss RF-cables ☒	☒ Power Meter ☒ DC-Power Supply ☒ Spectrum-Analyser	See List of equipment under each test case and chapter 6 for calibration info

Measurement uncertainty See chapter 5.4

Conducted Set-up W2

Bluetooth Low Energy conducted RF-Setup 2 (W2 Set-up)

General description:

The EUT's RF-signal is coupled out by a suitable antenna coupling connector (1). The signal is first attenuated (2) then connected to spectrum-analyzer (4) for RF-conducted measurements. The specific attenuation loss is determined prior to the measurement within a set-up attenuation measurement. These are then taken into account by correcting the measurement readings of the spectrum-analyzer.

Schematic:

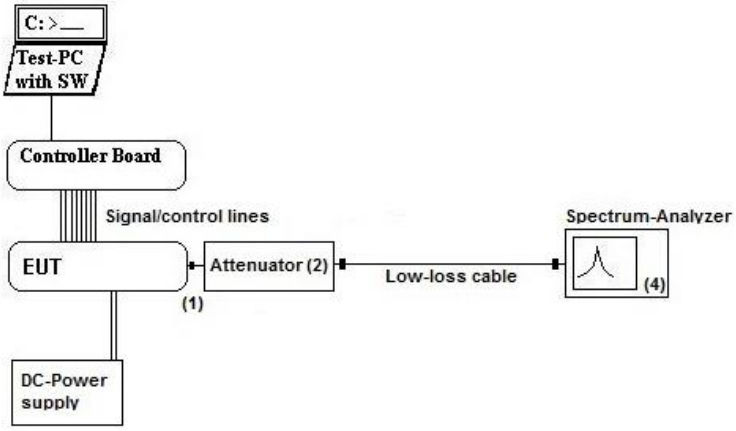

Testing method: ANSI C63.10:2013, KDB 558074 D01 DTS Meas.Guidance v03r02

Used Equipment

Passive Elements	Test Equipment	Remark:
☒ 20 dB Attenuator ☒ Low loss RF-cables	☒ Power Meter ☒ DC-Power Supply ☒ Spectrum-Analyser	See List of equipment under each test case and chapter 6 for calibration info

Measurement uncertainty See chapter 5.4

4.2. Test system set-up for radiated magnetic field measurements below 30 MHz

Specification: ANSI C63.10-2013 chapter 6.4 (§6.4.4.2)

General Description: Evaluating the radiated field emissions are done first by an exploratory emission measurement and a final measurement for most critical frequencies determined.

The loop antenna was placed at 1 m height above ground plane and 3 m measurement distance from set-up for investigations. Because of reduced measurement distance, correction data were applied, as stated in chapter "General Limit - Radiated field strength emissions below 30 MHz". The tests are performed in the semi anechoic room recognized by the regulatory commission.

Schematic:

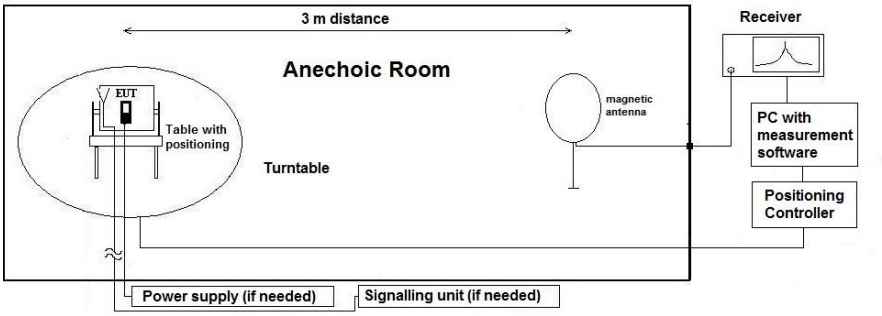

Testing method:

Exploratory, preliminary measurement
The EUT and it's associated accessories are placed on a non-conductive position manipulator (tipping device) of 0.8 m height which is placed on the turntable. By rotating the turntable (step 90°, range 0°to 360°) and the EUT itself either on 3-orthogonal axis (portable equipment) or 2-orthogonal axis (defined operational position of EUT), the emission spectrum was recorded. The loop antenna was moved at least to 2-perpendicular axes (antenna vector in direction of EUT and parallel to EUT) in order to maximize the emissions. The results are documented in a diagram. Critical frequencies (low margin to limit) are saved within a data reduction table for further investigations. If various operating modes are supported, further investigations are made to find the worst-case. Also the interconnection cables and equipment position were varied in order to maximize the emissions.

Final measurement on critical frequencies
Based on the exploratory measurements, the most critical frequencies are re-measured by maintaining the EUT's worst-case operation mode, cable position, etc.

First a frequency zoom around the critical frequency is done to locate the frequency more precisely. After this step, for all identified critical frequencies, the maximum peak was determined.

Following parameters were varied: the turntable angle continuously in the range 0 to 360 degree, the EUT itself either over 3-orthogonal axis (not defined usage position) or 2-orthogonal axis (defined usage position).

On the determined worst-case position, a final measurement with necessary bandwidth and detector according standard has been carried out.

Formula:

$E_C = E_R + AF + C_L + D_F - G_A$

$M = L_T - E_C$

AF =Antenna factor
C_L = Cable loss
D_F= Distance correction factor
E_C = Electrical field – corrected value
E_R = Receiver reading
G_A= Gain of pre-amplifier (if used)
L_T = Limit
M = Margin

All units are dB-units, positive margin means value is below limit.

Distance correction: **Reference for applied correction (extrapolating) factors due to reduced measurement distance:**
ANSI C63.10:2013, §6.4.4.2 - Equations (2) + (3) + (4)

4.3. Test system set-up for radiated electric field measurement 30 MHz to 1 GHz

Specification: ANSI C63.4-2014 chapter 8.2.3, ANSI C63.10-2013 chapter 6.5

General Description: Evaluating the field emissions have to be done first by an exploratory emissions measurement and a final measurement for most critical frequencies. The tests are performed in a NSA-compliant semi anechoic room (SAR) recognized by the regulatory commissions.

Schematic:

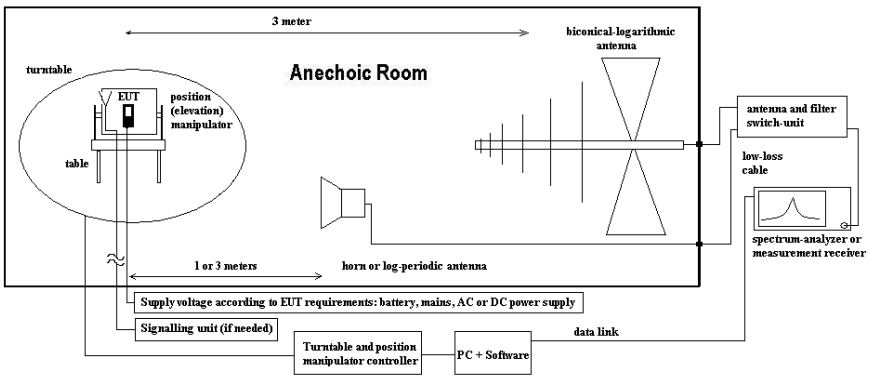

Testing method:

Exploratory, preliminary measurements
The EUT and its associated accessories are placed on a non-conductive position manipulator (tipping device) of 0.8 m height which is placed on the turntable. By rotating the turntable (range 0° to 360°, step 90°) and the EUT itself either on 3-orthogonal axis (portable equipment) or 2-orthogonal axis (defined operational position of EUT) the emission spectrum and it's characteristics was recorded with an EMI-receiver, broadband antenna and software.

Measurement antenna: horizontal and vertical, heights: 1,0 m and 1,82 m as worst-case determined by an exploratory emission measurements. The results are documented in a diagram. Critical frequencies (low margin to limit) are saved within a table for further investigations. If various operating modes are supported, further investigations are made to find the worst-case of them. Also the interconnection cables and equipment position were varied in order to maximize the emissions.

Final measurement on critical frequencies
Based on the exploratory measurements, the most critical frequencies are re-measured by maintaining the EUT's worst-case operation mode, cable position, etc. either on 10m OATS or 3m semi-anechoic room.

First a frequency zoom around the critical frequency is done to locate the frequency more precisely. After this step, for all identified critical frequencies, the maximum peak was determined.

Following parameters were varied: the turntable angle continuously in the range 0 to 360 degree, the EUT itself either over 3-orthogonal axis (not defined usage position) or 2-orthogonal axis (defined usage position). The measurement antenna height between 1 m and 4 m.

On the determined worst-case position, a final measurement with necessary bandwidth and detector according standard has been carried out.

Formula:

$E_C = E_R + AF + C_L + D_F - G_A$ (1)

$M = L_T - E_C$ (2)

AF = Antenna factor
C_L = Cable loss
D_F = Distance correction factor (if used)
E_C = Electrical field – corrected value
E_R = Receiver reading
G_A = Gain of pre-amplifier (if used)
L_T = Limit
M = Margin

All units are dB-units, positive margin means value is below limit.

4.4. Test system set-up for radiated electric field measurement above 1 GHz

Specification: ANSI C63.4-2014 chapter 8.3, ANSI C63.10-2013 chapter 6.6.3.3 & 6.6.4

General Description: Evaluating the emissions have to be done first by an exploratory emissions measurement and a final measurement for most critical frequencies. The tests are performed in a CISPR 16-1-4:2010 compliant fully anechoic room (FAR) recognized by the regulatory commission. The measurement distance was set to 3 meter for frequencies up to 18 GHz and 2 meter above 18 GHz. A logarithmic periodic antenna is used for the frequency range 30 MHz to 1 GHz. Horn antennas are used for frequency range 1 GHz to 40 GHz. The EUT is aligned within 3 dB beam width of the measurement antenna with three orthogonal axis measurements on the EUT.

Schematic:

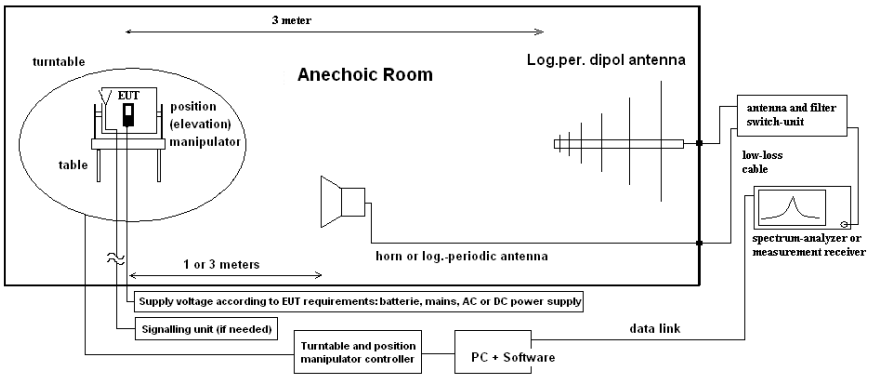

Testing method:

Exploratory, preliminary measurements
The EUT and its associated accessories are placed on a non-conductive position manipulator (tipping device) of 1.55 m height which is placed on the turntable. By rotating the turntable (range 0° to 360°, step 15°) and the EUT itself either on 3-orthogonal axis (portable equipment) or 2-orthogonal axis (defined operational position of EUT) the emission spectrum and it's characteristics was recorded with an EMI-receiver, broadband antenna and software.
The measurements are performed in horizontal and vertical polarization of the measurement antennas. The results are documented in a diagram. Critical frequencies (low margin to limit) are saved within a table for further investigations. If various operating modes are supported, further investigations are made to find the worst-case of them. Also the interconnection cables and equipment position were varied in order to maximize the emissions.

Final measurement on critical frequencies
Based on the exploratory measurements, the most critical frequencies are re-measured by maintaining the EUT's worst-case operation mode, cable position, etc.

First a frequency zoom around the critical frequency is done to locate the frequency more precisely. After this step, for all identified critical frequencies, the maximum peak was determined. Following parameters were varied: the turntable angle continuously in the range 0 to 360 degree, the EUT itself over 3-orthogonal axis and the height for EUT with large dimensions.

On the determined worst-case position, a final measurement with necessary bandwidth and detector according standard has been carried out.
On the determined worst-case position, a final measurement with necessary bandwidth and detector according standard has been carried out.

Formula:

$E_C = E_R + AF + C_L + D_F - G_A$ (1)

$M = L_T - E_C$ (2)

E_C = Electrical field – corrected value
E_R = Receiver reading
M = Margin
L_T = Limit
AF = Antenna factor
C_L = Cable loss
D_F = Distance correction factor (if used)
G_A = Gain of pre-amplifier (if used)

All units are dB-units, positive margin means value is below limit.

5. Measurement results

5.1. Duty-Cycle

5.1.1. Test location and equipment **(for reference numbers please see chapter 'List of test equipment')**

Ambient Climatic conditions		Temperature: (22±2)°C		Rel. humidity: (45±15)%		
test site	☐ 441 EMI SAR	☐ 348 EMI cond.	☐ 443 EMI FAR	☒ 347 Radio.lab.	☐ 337 OATS	☐
equipment	☐ 331 HC 4055	☐	☐	☐	☐	☐
spectr. analys.	☒ 683 FSU26	☐ 120 FSEM	☐ 264 FSEK	☐	☐	☐
power meter	☐ 262 NRV-S	☐ 266 NRV-Z31	☐ 265 NRV-Z33	☐ 261 NRV-Z55	☐ 356 NRV-Z1	☐
multimeter	☐ 341 Fluke 112	☐	☐	☐	☐	☐
DC power	☒ 671 EA-3013S	☐ 087 EA3013	☐ 354 NGPE 40	☐ 349 car battery	☐ 350 Car battery	☐ 463 HP3245A
line voltage	☐ 230 V 50 Hz via public mains		☐060 120 V 60 Hz via PAS 5000			
otherwise	☒ 530 Attenuator 10dB	☒ K4 Cable				

Method of measurement: ☒ conducted
☐ radiated

A special firmware program is used for test purposes. In opposite to normal operating mode a higher duty-cycle is set in order to facilitate the measurements. This is maximized at the extent possible.

The necessary duty-cycle correction factor is determined on nominal conditions on middle channel only. It is assumed that no noticeable changes occur when tested on other channels or climatic conditions.

Results:

BT LE-Modes	Marker 1	Marker 2	Marker 3	TX on	TX off	Converted to DC	10log(1/DC)
	ms	ms	ms	ms	ms		
ch 37	0,977564	1,267125	1,615689	0,34856	0,28956	0,54623	**2,62623**
ch 18	0,993590	1,267125	1,615689	0,34856	0,27354	0,56030	**2,51577**
ch 39	1,105769	1,375304	1,731868	0,35656	0,26954	0,56950	**2,44506**

Calculated with following formulas:

Duty cycle:	$x = \frac{Tx_{on}}{Tx_{on} + Tx_{off}}$	Duty cycle factor [dB]:	$10\log\left(\frac{1}{x}\right)$

The results were corrected in order to evaluate for worst-case result each time when average values are necessary for example average radiated emissions or similar.

5.2. Maximum peak conducted output power

5.2.1. Test location and equipment (for reference numbers please see chapter 'List of test equipment')

test location	☒ CETECOM Essen (Chapter. 2.2.1)		☐ 443 System CTC-FAR-EMI-		☐ Please see Chapter. 2.2.3	
test site	☐ 441 EMI SAR	☐ 487 SAR NSA	☒ 347 Radio.lab.		☐	☐
receiver	☐ 377 ESCS30	☐ 001 ESS	☐ 489 ESU 40	☐	☐	☐
spectr. analys.	☐ 584 FSU	☐ 120 FSEM	☐ 264 FSEK	☐ 489 ESU 40	☐	☐
antenna	☐ 574 BTA-L	☐ 133 EMCO3115	☐ 302 BBHA9170	☐ 289 CBL 6141	☐ 030 HFH-Z2	☐ 477 GPS
signaling	☐ 392 MT8820A	☐ 436 CMU	☐ 547 CMU			
otherwise	☒ 266 NRV-Z31	☒ 600 NRVD	☐ 110 USB LWL	☐ 482 Filter Matrix	☐ 378 RadiSense	☐ 693 TS8997
DC power	☒ 671 EA-3013S	☐ 463 HP3245A	☐ 459 EA 2032-50	☐ 268 EA- 3050	☐ 494 AG6632A	☐ 498 NGPE 40
otherwise	☐ 331 HC 4055	☐ 248 6 dB Attenuator	☐ 529 Power divider	☒ - cable OTA20		
	☒ 530 10dB Attenuator		☐ K 4 Cable kit			
line voltage	☐ 230 V 50 Hz via public mains		☐ 060 110 V 60 Hz via PAS 5000			

5.2.2. Reference

FCC	☒ §15.247(b) (3) + KDB 558074 D01 DTS Meas Guidance v03r05
IC	☒ RSS-247, Chapter 5.4(4)
ANSI	☒ ANSI 63.10:2013
Specification	*For systems using digital modulation in the 902-928 MHz, 2400-2483.5 MHz, and 5725-5850 MHz bands: 1 Watt. As an alternative to a peak power measurement, compliance with the one Watt limit can be based on a measurement of the maximum conducted output power. Maximum Conducted Output Power is defined as the total transmit power delivered to all antennas and antenna elements averaged across all symbols in the signalling alphabet when the transmitter is operating at its maximum power control level. Power must be summed across all antennas and antenna elements. The average must not include any time intervals during which the transmitter is off or is transmitting at a reduced power level. If multiple modes of operation are possible (e.g., alternative modulation methods), the maximum conducted output power is the highest total transmit power occurring in any mode.*

5.2.3. EUT settings:

The EUT was instructed to send with maximum power (if adjustable) according applicants instructions.
Different modulation characteristics have been checked, e.g. data rates which EUT can operate.

5.2.4. Test condition and measurement test set-up

Signal ink to test system (if used):	☐ air link	☐ cable connection	☒ none
EUT-grounding	☒ none	☐ with power supply	☐ additional connection
Equipment set up	☒ table top 1.5m height		☐ floor standing
Climatic conditions	Temperature: (22±3°C)		Rel. humidity: (40±20)%
General measurement procedures	Please see chapter “Test system set-up for conducted RF-measurement at antenna Port” (W1 Set-up)		

5.2.5. Measurement method and analyzer settings:

The measurement was performed in non-hopping transmission mode with the carrier set to lowest/middle and highest channel.

MEASUREMENT METHOD/ SPECTRUM-ANALYZER SETTINGS:

Measurement Method [1.)]	§15.247(b)(3) Maximum Peak	1.) ☒ PK1-Method (§5.2.1.1): RBW > 6dB-bandwidth of the signal, ANSI 63.10: 2009, chapter 6.10.2.1a 2.) ☐ PK2-Method (§5.2.1.2): Channel integration method (ANSI 63.10:2009) 3.) ☐ PK1-Method (§9.1.2 KDB): Peak Power Meter Method
	§15.247(b)(3) Maximum Average	4.) ☐ AVG1 - power averaging over EBW + integrated band power measurement 5.) ☐ AVG2 - trace averaging over EBW + integrated band power measurement 6.) ☐ RMS power meter method
	MIMO	7.) ☐ Method as described in Chapter 3.8 was used for measurements on two available RF-Antenna ports.
Center Frequency		Nominal channel frequency
Span		30% higher than the EBW measured before
Resolution Bandwidth (RBW)		1MHz
Video Bandwidth (VBW)		3MHz
Sweep time		coupled
Detector		Peak, Max hold mode for method PK1/PK2 or RMS and trace average for method AVG1/AVG2
Sweep Mode		Repetitive mode, allow trace to stabilize
Analyzer-Mode		☐ normal ☐ activated channel integration method with limits set to the EBW of the signal

Remark 1: guidance 558074 D01 measurement DTS guidance v03r05

5.2.6. RESULTS

APLICANT'S DECLARED ANTENNA CHARACTERISTICS:

☒ Directional Gain < 6 dBi (measured: difference between measured conducted and radiated eirp. power)
☐ Directional Gain > 6 dBi (measured / applicant's declaration) -> conducted power reduction necessary

- Maximum declared antenna gain [isotropic]: 1.7 dBi for 2450 MHz

Different modulation types and data rates were tested in order to find the maximum peak conducted output power. **Enclosed are only the maximum values for each modulation format**, pls. compare separate document A1 for all results.

Max. Peak power (conducted) [dBm]			
Set-up no.: 1 Op-Mode: 1	Low channel = 37 (2402 MHz)	Middle channel = 18 (2442 MHz)	High channel = 39 (2480 MHz)
Measured Level GFSK	-3.57	-3.43	-3.52
Limit	1 Watt (30dBm) Peak		

Remark:
1.) External Path Loss -> set as either as correction factor in spectrum-analyzer or activated as transducer table

5.2.6.1. VERDICT: Maximum value of -3.43 dBm Peak (0.44mW) -> Pass

5.3. RF-Parameter - Power Spectral Density

5.3.1. Test location and equipment (for reference numbers please see chapter 'List of test equipment')

test location	☒ CETECOM Essen (Chapter. 2.2.1)		☐ Please see Chapter. 2.2.2		☐ Please see Chapter. 2.2.3	
test site	☐ 441 EMI SAR	☐ 487 SAR NSA	☐ 337 OATS	☒ 347 Radio.lab.	☐	☐
receiver	☐ 377 ESCS30	☐ 001 ESS	☐ 489 ESU	☒ 683 FSU26	☐	☐
spectr. analys.	☐ 489 ESU	☐ 120 FSEM	☐ 264 FSEK	☐	☐	☐
power supply	☒ 671 EA-3013S	☐ 457 EA 3013A	☐ 463	☐ 268 EA- 3050	☐ 494 AG6632A	☐ 498 NGPE 40
otherwise	☒530 10dB Attenuator			☒ cable K4		

5.3.2. REFERENCES: §15.247(e), RSS-247, Chapter 5.2(2)

(e) *For digitally modulated systems, the power spectral density conducted from the intentional radiator to the antenna shall not be greater than 8 dBm in any 3 kHz band during any time interval of continuous transmission. This power spectral density shall be determined in accordance with the provisions of paragraph (b) of this section. The same method of determining the conducted output power shall be used to determine the power spectral density.*

5.3.3. TEST CONDITION AND MEASUREMENT TEST SET-UP

Signal ink to test system (if used):	☐ air link	☐ cable connection	☒ none
EUT-grounding	☒ none	☐ with power supply	☐ additional connection
Equipment set up	☒ table top		☐ floor standing
Climatic conditions	Temperature: (22±3°C)		Rel. humidity: (40±20)%
General measurement procedures	Please see chapter “Test system set-up for conducted RF-measurement at antenna Port” (W2 Set-up)		

5.3.4. EUT SETTINGS:

The EUT was instructed to send with maximum power (if adjustable) according applicants instructions.

5.3.5. MEASUREMENT METHOD/ SPECTRUM-ANALYZER SETTINGS

Measurement Method	☐ ANSI 63.10:2009	☒ PKPSD-Method ☐ AVGPSD Method
	☒ guidance 558074 D01 measurement DTS guidance v03r05	
Center Frequency	Nominal channel frequency	
Span	5..30% higher than the EBW measured before	
Resolution Bandwidth (RBW)	> 3 kHz (at least 3 times RBW) - pls. see diagram	
Video Bandwidth (VBW)	> 10 kHz - pls. see diagram	
Sweep time	coupled	
Detector	Peak, Max hold mode for method PKPSD or RMS method AVGPSD	
Sweep Mode	Repetitive mode, allow trace to stabilize (PKPSD) or single (AVGPSD)	
Addition of correction factors	external measuring set-up path-loss	

Remarks:--

5.3.6. RESULTS

Set-up no.: 1 Op-Mode: 1	**POWER SPECTRAL DENSITY** [dBm/3 kHz]		
	Low channel = 37 (2402 MHz)	Middle channel = 18 (2442 MHz)	High channel = 39 (2480 MHz)
Measured Level GFSK	-19.36	-19.22	-19.21
Correction factor-[dB] (Path loss+cable attenuation)	20.9 (set as correction factor in SA-> readings = final result)		
Limit	< 8dBm/3 kHz		

Remark: see diagrams for details on frequency in separate annex A1

5.3.7. VERDICT: PASS

5.4. RF-Parameter - 6 dB Bandwidth and 99% occupied Bandwith

5.4.1. Test location and equipment (for reference numbers please see chapter 'List of test equipment')

test site	☐ 441 EMI SAR	☐ 348 EMI cond.	☐ 443 EMI FAR	☒ 347 Radio.lab.	☐ 337 OATS	☐
spectr. analys.	☐ 584 FSU	☐ 120 FSEM	☐ 264 FSEK	☐ 489 ESU	☒ 683 FSU26	☐
attenuator	☒ 530 10 dB	☐	☐	☐	☐	☐
signaling	☐ 392 MT8820A	☐ 436 CMU	☐ 547 CMU			
DC power	☒ 671 EA-3013S	☐ 087 EA3013	☐ 354 NGPE 40	☐ 086 LNG50-10	☐	☐
Power supply voltage	☐ 12 V DC		☐060 110 V 60 Hz via PAS 5000			
Others	☐ 613 20dB Attenuator		☒ cable K5			

5.4.2. References of occupied and emission bandwidth

§15.247(a)(2), RSS-247, Chapter 5.2(1); RSS-Gen Issue 4: Chapter 4.6.2

(1) *Frequency hopping systems shall have hopping channel carrier frequencies separated by a minimum of 25 kHz or the 20 dB bandwidth of the hopping channel, whichever is greater. Alternatively, frequency hopping systems operating in the 2400-2483.5 MHz band may have hopping channel carrier frequencies that are separated by 25 kHz or two-thirds of the 20 dB bandwidth of the hopping channel, whichever is greater, provided the systems operate with an output power no greater than 125 mW.*

(2) *DSSS Systems using digital modulation techniques may operate in the 902-928 MHz, 2400-2483.5 MHz, and 5725-5850 MHz bands. The minimum 6 dB bandwidth shall be at least 500 kHz.*

5.4.3. Test condition and measurement test set-up

Signal ink to test system (if used):	☐ air link	☐ cable connection	☒ none
EUT-grounding	☒ none	☐ with power supply	☐ additional connection
Equipment set up	☒ table top		☐ floor standing
Climatic conditions	Temperature: (22±3°C)		Rel. humidity: (40±20)%
General measurement procedures	Please see chapter "Test system set-up for conducted RF-measurement at antenna Port" (W2 Set-up)		

5.4.4. EUT Settings:

The EUT was instructed to send with maximum power (if adjustable) according applicants instructions.

5.4.5. Measurement method:

Three carrier frequencies (low/middle/high) were used for showing the compliance with this requirement. A DELTA Marker method was set to measure the bandwidth compared to the highest In-Band power. The operating modes have been varied (e.g. data rate, modulation scheme, etc.). If applicable the hopping-mode is switched off.

Also the **99% emission bandwidth** was measured. Two markers are placed on frequency points such that left to lower f-marker and right to higher f-marker only 1% of the TX-power is contained. Between the markers, 99% of the power is laying. The RBW value is readjusted and the measurement repeated until the RBW/EBW ratio is around 1%.

5.4.6. Spectrum-Analyzer settings:

Span	Set as to fully display the emissions + 30%
Scale y display	approximate 30dB below the maximum PEAK level
Resolution Bandwidth (RBW)	☐ ANSI 63.10:2009 Set to initial value approx 1% to 5% of the emission bandwidth, re-adjust and proof that RBW/EBW is between 1% and 5% ☒ KDB558074v03r05
Video Bandwidth (VBW)	Minimum 3 times the resolution bandwidth
Sweep time	Auto -coupled
Detector	Peak detector
Sweep mode	Repetitive Mode, MAX-HOLD, trace stabilization

5.4.7. Results:

For graphical results pls. see annex 1 to this test report.

6dB BANDWIDTH:

Set-up no.: 1 Op-Mode: 1	**6dB BANDWIDTH [MHz]**		
T_{NOM} = 21°C, V_{NOM} = 27V	Low channel = 37 (2402 MHz)	Middle channel = 18 (2442 MHz)	High channel = 39 (2480 MHz)
Measured Level GFSK	0.663465	0.682692	0.682692

Remark: --

Additional also the 99% occupied bandwidth were measured for worst-case 6dB bandwidth.

99% OCCUPIED BANDWIDTH:

Set-up no.: 1 Op-Mode: 1	**99% Bandwidth [MHz]**		
T_{NOM} = 21°C, V_{NOM} = 27V	Low channel = 37 (2402 MHz)	Middle channel = 18 (2442 MHz)	High channel = 39 (2480 MHz)
Measured Level b-Mode @1Mbps	1.03846	1.03846	1.04327

Remark: --

VERDICT: DTS system requirements for 6dB-bandwidth according §15.247 (BW > 500kHz) Pass

5.5. 20 dBc power specification

5.5.1. TEST LOCATION AND EQUIPMENT (for reference numbers please see chapter 'List of test equipment')

test location	☒ CETECOM Essen (Chapter. 2.2.1)		☒ 443 System CTC-FAR-EMI-		☐ Please see Chapter. 2.2.3	
test site	☐ 441 EMI SAR	☐ 487 SAR NSA	☐ 337 OATS	☒ 347 Radio.lab.	☐	☐
receiver	☐ 377 ESCS30	☐ 001 ESS	☐ 489 ESU	☒ 683 FSU26	☐	☐
spectr. analys.	☐ 489 ESU	☐ 120 FSEM	☐ 264 FSEK	☐	☐	☐
power supply	☒ 671 EA-3013S	☐ 457 EA 3013A	☐ 459 EA 2032-50	☐ 268 EA- 3050	☐ 494 AG6632A	☐ 498 NGPE 40
otherwise	☒ 530 10 dB Attenuator			☒ cable K4		

5.5.2. REFERENCE: §15.247, §15.205 / RSS-247, CHAPTER 5.5

(d) *In any 100 kHz bandwidth outside the frequency band in which the spread spectrum or digitally modulated intentional radiator is operating, the radio frequency power that is produced by the intentional radiator shall be at least 20 dB below that in the 100 kHz bandwidth within the band that contains the highest level of the desired power, based on either an RF conducted or a radiated measurement, provided the transmitter demonstrates compliance with the peak conducted power limits.*

5.5.3. Test condition and measurement test set-up

Signal ink to test system (if used):		☐ air link	☐ cable connection	☒ none
EUT-grounding		☒ none	☐ with power supply	☐ additional connection
Equipment set up		☒ table top 1.5m height		☐ floor standing
Climatic conditions		Temperature: (22±3°C)		Rel. humidity: (40±20)%
Spectrum-Analyzer settings	Scan frequency range:	☐ 1 – 18 GHz ☐ 18 – 25 GHz ☐ 18 – 40 GHz ☒ other: see diagrams		
	Scan-Mode	☒ 6 dB EMI-Receiver Mode ☐ 3 dB Spectrum analyser Mode		
	Detector	Peak and Average		
	RBW/VBW	100kHz/300kHz		
	Mode:	Repetitive-Scan, max-hold		
	Scan step	40kHz		
	Sweep-Time	Coupled – calibrated display if CW signal otherwise adapted to EUT's individual duty-cycle		
General measurement procedures		Please see chapter "Test system set-up for radiated electric field measurements above 1 GHz" for general measurements procedures in anechoic chamber.		

5.5.4. EUT SETTINGS

The EUT was instructed to send with maximum power (if adjustable) according to applicants instructions.

5.5.5. MEASUREMENT METHOD

According guidance 558074 D01 measurement DTS guidance V03r05: the frequency spectrum was investigated for **conducted** spurious emissions values lower than 20dB related to the RF-carrier power value. Three carrier frequencies (low/middle/high channel) were used for showing the compliance with this requirement. First a In-Band Reference level measurement of the carrier was performed. The video bandwidth (VBW) was chosen 10 times the resolution bandwidth (RBW). The frequency scan was up to 10 times the highest channel frequency within the operational mode. The spectrum-analyzer was set to MAX-PEAK Detector, MAX-Hold Mode, trace stabilisation mode.

5.5.6. TABLE OF MEASUREMENT RESULTS:

Set-up no.: 1 Op-Mode: 1	**RF-Conducted test: 20 dBc spurious emissions**					
Frequency Range	Low channel =37 (2402 MHz) Level Reference (In-Band)= -4.84 dBm Limit= -24.84 dBm		Middle channel = 18 (2442 MHz) Level Reference (In-Band) = -4.65 dBm Limit= -24.65 dBm		High channel = 39 (2480MHz) Level Reference (In-Band)= -4.83 dBm Limit= -24.83 dBm	
	Frequency [MHz]	Value [dBc]	Frequency [MHz]	Value [dBc]	Frequency [MHz]	Value [dBc]
150kHz to 30MHz	20.0361	>35	4.5588	>35	7.4184	>35
30MHz to 2.8 GHz	2642.3870	>35	2593.0455	>40	2604.3599	>35
2.8 to 25 GHz	18013.66	>30	21927.52	>30	21898.66	>30
Band-Edge	--	>35	--	--	--	>35

Remark: see diagrams in separate document A1

The limit on the diagrams is 20dB under the reference level measured In-Band for each channel

5.5.7. TEST RESULT: PASS

5.6. General Limit - Radiated field strength emissions below 30 MHz

5.6.1. Test location and equipment

test location	☒ CETECOM Essen (Chapter. 2.2.1)		☐ Please see Chapter. 2.2.2		☐ Please see Chapter. 2.2.3	
test site	☒ 441 EMI SAR	☐ 487 SAR NSA	☐ 347 Radio.lab.		☐	☐
receiver	☐ 377 ESCS30	☒ 001 ESS	☐	☐	☐	☐
spectr. analys.	☐ 584 FSU	☐ 120 FSEM	☐ 264 FSEK	☐	☐	☐
antenna	☐ 574 BTA-L	☐ 133 EMCO3115	☐ 302 BBHA9170	☐ 289 CBL 6141	☒ 030 HFH-Z2	☐ 477 GPS
signaling	☐ 392 MT8820A	☐ 371 CBT32	☐ 547 CMU	☐ 594 CMW		
otherwise	☐ 400 FTC40x15E	☐ 401 FTC40x15E	☐ 110 USB LWL	☐ 482 Filter Matrix	☐ 378 RadiSense	
DC power	☒ 671 EA-3013S	☐ 457 EA 3013A	☐ 459 EA 2032-50	☐ 268 EA- 3050	☐ 494 AG6632A	☐ 498 NGPE 40
line voltage	☒ 12 V DC via real car battery		☐ 060 120 V 60 Hz via PAS 5000			

5.6.2. Requirements

FCC	Part 15, Subpart C, §15.205 & §15.209			
IC	RSS-Gen: Issue 4: §8.9 Table 5			
ANSI	C63.10-2013			
Frequency [MHz]	Field strength limit [µV/m]	[dBµV/m]	Distance [m]	Remarks
0.009 – 0.490	2400/f (kHz)	67.6 – 20Log(f) (kHz)	300	Correction factor used due to measurement distance of 3 m
0.490 – 1.705	24000/f (kHz)	87.6 – 20Log(f) (kHz)	30	Correction factor used due to measurement distance of 3 m
1.705 – 30	30	29.5	30	Correction factor used due to measurement distance of 3 m

5.6.3. Test condition and test set-up

Signal link to test system (if used):		☐ air link	☐ cable connection	☒ none
EUT-grounding		☒ none	☐ with power supply	☐ additional connection
Equipment set up		☒ table top		☐ floor standing
Climatic conditions		Temperature: (22±3°C)		Rel. humidity: (40±20)%
EMI-Receiver or Analyzer Settings	Scan data	☒ 9 – 150 kHz RBW/VBW = 200 Hz Scan step = 80 Hz ☒ 150 kHz – 30 MHz RBW/VBW = 9 kHz Scan step = 4 kHz ☐ other:		
	Scan-Mode Detector Mode: Sweep-Time	☒ 6 dB EMI-Receiver Mode ☐ 3dB Spectrum analyser Mode Peak (pre-measurement) and Quasi-PK/Average (final if applicable) Repetitive-Scan, max-hold Coupled – calibrated display if continuous signal otherwise adapted to EUT's individual transmission duty-cycle		
General measurement procedures		Please see chapter "Test system set-up radiated magnetic field measurements below 30 MHz"		

5.6.4. Measurement Results

The results are presented below in summary form only. For more information please consult the diagrams included in annex 1.

Table of measurement results:

Diagram No.	Carrier Channel		Frequency range	Set-up no.	OP-mode no.	Remark	Used detector			Result
	Range	No.					PK	AV	QP	
2.14	Low	37	9 kHz - 30 MHz	2	1	BT-LE-GFSK-1Mbps	☒	☐	☐	Pass
2.15	Middle	18	9 kHz - 30 MHz	2	1	BT-LE-GFSK-1Mbps	☒	☐	☐	Pass
2.16	High	39	9 kHz - 30 MHz	2	1	BT-LE-GFSK-1Mbps	☒	☒	☐	Pass

5.6.5. Correction factors due to reduced meas. distance (f< 30 MHz)

The used correction factors when the measurement distance is reduced compared to regulatory measurement distance, are calculated according Extrapolation formulas valid for EUT's with maximum dimension of 0.625xLambda. Formula 2+3+4 as presented in ANSI C63.10, Chapter 6.4.4 are used for the calculations of proper extrapolation factors.

Frequency -Range	f [kHz/MHz]	Lambda [m]	Far-Field Point [m]	Distance Limit accord. 15.209 [m]	1st Condition (dmeas< $D_{near-field}$)	2'te Condition (Limit distance bigger $d_{near-field}$)	Distance Correction accord. Formula
kHz	9,00E+03	33333,33	5305,17	300	fullfilled	not fullfilled	-80,00
	1,00E+04	30000,00	4774,65		fullfilled	not fullfilled	-80,00
	2,00E+04	15000,00	2387,33		fullfilled	not fullfilled	-80,00
	3,00E+04	10000,00	1591,55		fullfilled	not fullfilled	-80,00
	4,00E+04	7500,00	1193,66		fullfilled	not fullfilled	-80,00
	5,00E+04	6000,00	954,93		fullfilled	not fullfilled	-80,00
	6,00E+04	5000,00	795,78		fullfilled	not fullfilled	-80,00
	7,00E+04	4285,71	682,09		fullfilled	not fullfilled	-80,00
	8,00E+04	3750,00	596,83		fullfilled	not fullfilled	-80,00
	9,00E+04	3333,33	530,52		fullfilled	not fullfilled	-80,00
	1,00E+05	3000,00	477,47		fullfilled	not fullfilled	-80,00
	1,25E+05	2400,00	381,97		fullfilled	not fullfilled	-80,00
	2,00E+05	1500,00	238,73		fullfilled	fullfilled	-78,02
	3,00E+05	1000,00	159,16		fullfilled	fullfilled	-74,49
	4,00E+05	750,00	119,37		fullfilled	fullfilled	-72,00
	4,90E+05	612,24	97,44		fullfilled	fullfilled	-70,23
	5,00E+05	600,00	95,49	30	fullfilled	not fullfilled	-40,00
	6,00E+05	500,00	79,58		fullfilled	not fullfilled	-40,00
	7,00E+05	428,57	68,21		fullfilled	not fullfilled	-40,00
	8,00E+05	375,00	59,68		fullfilled	not fullfilled	-40,00
	9,00E+05	333,33	53,05		fullfilled	not fullfilled	-40,00
MHz	1,00	300,00	47,75		fullfilled	not fullfilled	-40,00
	1,59	188,50	30,00		fullfilled	not fullfilled	-40,00
	2,00	150,00	23,87		fullfilled	fullfilled	-38,02
	3,00	100,00	15,92		fullfilled	fullfilled	-34,49
	4,00	75,00	11,94		fullfilled	fullfilled	-32,00
	5,00	60,00	9,55		fullfilled	fullfilled	-30,06
	6,00	50,00	7,96		fullfilled	fullfilled	-28,47
	7,00	42,86	6,82		fullfilled	fullfilled	-27,13
	8,00	37,50	5,97		fullfilled	fullfilled	-25,97
	9,00	33,33	5,31		fullfilled	fullfilled	-24,95
	10,00	30,00	4,77		fullfilled	fullfilled	-24,04
	10,60	28,30	4,50		fullfilled	fullfilled	-23,53
	11,00	27,27	4,34		fullfilled	fullfilled	-23,21
	12,00	25,00	3,98		fullfilled	fullfilled	-22,45
	13,56	22,12	3,52		fullfilled	fullfilled	-21,39
	15,00	20,00	3,18		fullfilled	fullfilled	-20,51
	15,92	18,85	3,00		fullfilled	fullfilled	-20,00
	17,00	17,65	2,81		not fullfilled	fullfilled	-20,00
	18,00	16,67	2,65		not fullfilled	fullfilled	-20,00
	20,00	15,00	2,39		not fullfilled	fullfilled	-20,00
	21,00	14,29	2,27		not fullfilled	fullfilled	-20,00
	23,00	13,04	2,08		not fullfilled	fullfilled	-20,00
	25,00	12,00	1,91		not fullfilled	fullfilled	-20,00
	27,00	11,11	1,77		not fullfilled	fullfilled	-20,00
	29,00	10,34	1,65		not fullfilled	fullfilled	-20,00
	30,00	10,00	1,59		not fullfilled	fullfilled	-20,00

5.7. General Limit - Radiated field strength emissions, 30 MHz - 1 GHz

5.7.1. Test location and equipment

test location	☒ CETECOM Essen (Chapter. 2.2.1)		☐ Please see Chapter. 2.2.2		☐ Please see Chapter. 2.2.3	
test site	☒ 441 EMI SAR	☒ 487 SAR NSA				
receiver	☐ 377 ESCS30	☒ 001 ESS	☐ 489 ESU 40	☐ 620 ESU 26		
spectr. analys.	☐ 584 FSU	☐ 120 FSEM	☐ 264 FSEK			
antenna	☒ 574 BTA-L	☐ 133 EMCO3115	☐ 302 BBHA9170	☐ 289 CBL 6141	☐ 030 HFH-Z2	☐ 477 GPS
signaling	☐ 392 MT8820A	☐ 371 CBT32	☐ 547 CMU	☐ 594 CMW		
otherwise	☐ 400 FTC40x15E	☐ 401 FTC40x15E	☐ 110 USB LWL	☒ 482 Filter Matrix		
DC power	☐ 456 EA 3013A	☒ 457 EA 3013A	☐ 459 EA 2032-50	☐ 268 EA- 3050	☐ 494 AG6632A	☐ 498 NGPE
line voltage	☒ 12V DC via real car battery		☐ 060 120 V 60 Hz via PAS 5000			

5.7.2. Requirements/Limits

FCC		☐ Part 15 Subpart B, §15.109, class B ☒ Part 15 Subpart C, §15.209 @ frequencies defined in §15.205	
IC		☒ RSS-Gen., Issue 4, Chapter 8.9, Table 4+6 (license-exempt radio apparatus) ☐ RSS-Gen., Issue 4, Chapter 7.1.2, Table 2 (receiver) ☐ ICES-003, Issue 6, Table 5 (Class B) ☐ RSS-247, Issue 1, Chapter 5	
ANSI		☐ C63.4-2014 ☒ C63.10-2013	
Limit	Frequency [MHz]	Radiated emissions limits, 3 meters	
		QUASI Peak [µV/m]	QUASI-Peak [dBµV/m]
	30 - 88	100	40.0
	88 - 216	150	43.5
	216 - 960	200	46.0
	above 960	500	54.0

5.7.3. Requirements/Limits

FCC		Part 15 Subpart B, §15.109, class A	
ANSI		☐ C63.4-2014 ☒ C63.10-2013	
Limit	Frequency [MHz]	Radiated emissions limits, 10 meters	
		QUASI-Peak [µV/m]	QUASI-Peak [dBµV/m]
	30-88	90	39.0
	88-216	150	43.5
	216-960	210	46.4
	above 960	300	49.5

5.7.4. Restricted bands of operation (FCC §15.205)

MHz	MHz	MHz	GHz
0.090-0.110	16.42-16.423	399.9-410	4.5-5.15
0.495-0.505	16.69475-16.69525	608-614	5.35-5.46
2.1735-2.1905	16.80425-16.80475	960-1240	7.25-7.75
4.125-4.128	25.5-25.67	1300-1427	8.025-8.5
4.20725-4.20775	37.5-38.25	1645.5-1646.5	9.3-9.5
6.215-6.218	73-74.6	1660-1710	10.6-12.7
6.26775-6.26825	74.8-75.2	1718.8-1722.2	13.25-13.4
6.31175-6.31225	108-121.94	2200-2300	14.47-14.5
8.291-8.294	123-138	2310-2390	15.35-16.2
8.362-8.366	149.9-150.05	2483.5-2500	17.7-21.4
8.37625-8.38675	156.52475-156.52525	2690-2900	22.01-23.12
8.41425-8.41475	156.7-156.9	3260-3267	23.6-24.0
12.29-12.293	162.0125-167.17	3332-3339	31.2-31.8
12.51975-12.52025	167.72-173.2	3345.8-3358	36.43-36.5
12.57675-12.57725	240-285	3600-4400	--
13.36-13.41	322-335.4	--	--
Remark: only spurious emissions are allowed within these frequency bands not exceeding the limits per §15.209			

5.7.5. Test condition and measurement test set-up

Signal link to test system (if used):		☐ air link	☐ cable connection ☒ none
EUT-grounding		☒ none	☐ with power supply ☐ additional connection
Equipment set up		☒ table top 0.8m height	☐ floor standing
Climatic conditions		Temperature: (22±3°C)	Rel. humidity: (40±20)%
EMI-Receiver (Analyzer) Settings	Scan frequency range:	☒ 30 – 1000 MHz ☐ other:	
	Scan-Mode	☒ 6 dB EMI-Receiver Mode ☐ 3 dB spectrum analyser mode	
	Detector	Peak / Quasi-peak	
	RBW/VBW	100 kHz/300 kHz	
	Mode:	Repetitive-Scan, max-hold	
	Scan step	80 kHz	
	Sweep-Time	Coupled – calibrated display if continuous tx-signal otherwise adapted to EUT's individual duty-cycle	
General measurement procedures		Please see chapter "Test system set-up for electric field measurement in the range 30 MHz to 1 GHz"	

5.7.6. MEASUREMENT RESULTS

The results are presented below in summary form only. For more information please consult the diagrams included in annex 1.

Table of measurement results:

Dia-gram no.	Carrier Channel		Frequency range	Set-up no.	OP-mode no.	Remark	Used detector			Result
	Range	No.					PK	AV	QP	
3.14	Low	37	30 MHz – 1 GHz	2	1	BT-LE-GFSK-1Mbps	☒	☐	☒	Pass
3.15	Middle	18	30 MHz – 1 GHz	2	1	BT-LE-GFSK-1Mbps	☒	☐	☒	Pass
3.16	High	39	30 MHz – 1 GHz	2	1	BT-LE-GFSK-1Mbps	☒	☐	☒	Pass

Remark:

5.8. General Limit - Radiated emissions, above 1 GHz

5.8.1. Test location and equipment FAR

test site	☐441 EMI SAR	☐348 EMI cond.	☒443 EMI FAR	☐347 Radio.lab.	☐337 OATS	☐
spectr. analys.	☐584 FSU	☐120 FSEM	☐264 FSEK	☒489 ESU 40	☐	☐
antenna meas	☐574 BTA-L	☐289 CBL 6141	☐608 HL 562	☒549 HL025	☒302 BBHA9170	☐477 GPS
antenna meas	☐123 HUF-Z2	☐132 HUF-Z3	☐030 HFH-Z2	☒376 BBHA9120E		☐
antenna subst	☐071 HUF-Z2	☐020 EMCO3115	☐063 LP 3146	☐303 BBHA9170	☐	☐
multimeter	☐341 Fluke 112	☐	☐	☐	☐	☐
signaling	☐392 MT8820A	☐371 CBT32	☐547 CMU	☐594 CMW		
DCpower	☐086 LNG50-10	☐087 EA3013	☐354 NGPE 40	☐349 car battery	☐350 Car battery	☐
line voltage	☒ 12VDC via real car battery		☐ 060 120 V 60 Hz via PAS 5000			

5.8.2. Requirements/Limits (CLASS B equipment)

FCC	☐ Part 15 Subpart B, §15.109 class B ☒ Part 15 Subpart C, §15.209 for frequencies defined in §15.205 ☒ Part 15 Subpart C, §15.407(b)(1)(2)(3) 9			
IC	☒ RSS-Gen., Issue 4, Chapter 8.9, Table 4+6 (transmitter license exempt) ☐ RSS-Gen., Issue 4, Chapter 8.9, Table 2 (receiver) ☐ RSS-247, Issue 1, Chapter 6			
ANSI	☐ C63.4-2014 ☒ C63.10-2013			
Frequency [MHz]	Limits			
	AV [µV/m]	AV [dBµV/m]	Peak [µV/m]	Peak [dBµV/m] or [dBm/MHz]
above 1 GHz for frequencies as defined in §15.205 or RSS-Gen., Issue 4, §8.10 - Table 6	500	54.0	5000	74.0 dBµV/m

5.8.3. Test condition and measurement test set-up

Signal link to test system (if used):		☐ air link	☐ cable connection	☒ none
EUT-grounding		☒ none	☐ with power supply	☐ additional connection
Equipment set up		☒ table top 1.5m height		☐ floor standing
Climatic conditions		Temperature: (22±3°C)		Rel. humidity: (40±20)%
Spectrum-Analyzer settings	Scan frequency range:	☒ 1 – 18 GHz ☐ 18 – 25 GHz ☐ 18 – 40 GHz ☐ other:		
	Scan-Mode	☒ 6 dB EMI-Receiver Mode ☐ 3 dB Spectrum analyser Mode		
	Detector	Peak and Average		
	RBW/VBW	1 MHz / 3 MHz		
	Mode:	Repetitive-Scan, max-hold		
	Scan step	400 kHz		
	Sweep-Time	Coupled – calibrated display if CW signal otherwise adapted to EUT's individual duty-cycle		
General measurement procedures		Please see chapter "Test system set-up for radiated electric field measurements above 1 GHz"		

5.8.4. Measurement Results

The results are presented below in summary form only. For more information please consult the diagrams included in annex 1.

Dia-gram no.	Carrier Channel		Frequency range	Set-up no.	OP-mode no.	Remark	Used detector			Result
	Range	No.					PK	AV	QP	
4.14	Low	37	1 GHz – 18 GHz	2	1	BT-LE-GFSK-1Mbps	☒	☒	☐	Pass
4.14a	Low	37	18 GHz – 25 GHz	2	1	BT-LE-GFSK-1Mbps	☒	☒	☐	Pass
4.15	Middle	18	1 GHz – 18 GHz	2	1	BT-LE-GFSK-1Mbps	☒	☒	☐	Pass
4.15a	Middle	18	18 GHz – 25 GHz	2	1	BT-LE-GFSK-1Mbps	☒	☒	☐	Pass
4.16	High	39	1 GHz – 18 GHz	2	1	BT-LE-GFSK-1Mbps	☒	☒	☐	Pass
4.16a	High	39	18 GHz – 25 GHz	2	1	BT-LE-GFSK-1Mbps	☒	☒	☐	Pass

Remark: see diagrams in annex 1 for more details

5.9. RF-Parameter - Radiated Band Edge compliance measurements

5.9.1. Test location and equipment FAR

test site	☐441 EMI SAR	☐348 EMI cond.	☒443 EMI FAR	☐347 Radio.lab.	☐337 OATS	☐
spectr. analys.	☐584 FSU	☐120 FSEM	☐264 FSEK	☒489 ESU 40	☐	☐
antenna meas	☐574 BTA-L	☐289 CBL 6141	☐608 HL 562	☒549 HL025	☐302 BBHA9170	☐477 GPS
antenna meas	☐123 HUF-Z2	☐132 HUF-Z3	☐030 HFH-Z2	☐	☐	☐
antenna subst	☐071 HUF-Z2	☐020 EMCO3115	☐063 LP 3146	☐303 BBHA9170	☐	☐
multimeter	☐341 Fluke 112	☐	☐	☐	☐	☐
signaling	☐392 MT8820A	☐371 CBT32	☐547 CMU	☐594 CMW		
DC power	☐086 LNG50-10	☐087 EA3013	☐354 NGPE 40	☐349 car battery	☐350 Car battery	☐
line voltage	☐ 12VdC via real car battery		☐ 060 120 V 60 Hz via PAS 5000			

5.9.2. Requirements/Limits

FCC	☐ Part 15 Subpart B, §15.109 class B ☒ Part 15 subpart C, §15.209 @ frequencies defined in §15.205
IC	☐ RSS-210, Issue 8, Annex 8 ☒ RSS-247, Issue 1, Chapter 5.5 ☒ RSS-Gen: Issue 4: §8.9, Table 4+6
ANSI	☐ C63.4-2009 ☐ C63.4-2014 ☐ C63.10-2009 ☒ C63.10-2013, Chapter 6.10.6

5.9.3. Test condition and measurement test set-up

Signal ink to test system (if used):		☐ air link	☐ cable connection	☒ none
EUT-grounding		☒ none	☐ with power supply	☐ additional connection
Equipment set up		☒ table top 1.5m height		☐ floor standing
Climatic conditions		Temperature: (22±3°C)		Rel. humidity: (40±20)%
Spectrum-Analyzer settings	Scan frequency range:	☐ 1 – 18 GHz ☐ 18 – 25 GHz ☐ 18 – 40 GHz ☒ other: see diagrams		
	Scan-Mode	☐ 6 dB EMI-Receiver Mode ☒ 3 dB Spectrum analyser Mode		
	Detector	Peak and Average		
	RBW/VBW	Left band-edge: 100kHz/300kHz Right band-edge: 1 MHz / 3 MHz		
	Mode:	Repetitive-Scan, max-hold		
	Scan step	40kHz or 400 kHz		
	Sweep-Time	Coupled – calibrated display if CW signal otherwise adapted to EUT's individual duty-cycle		
General measurement procedures		Please see chapter "Test system set-up for radiated electric field measurements above 1 GHz" for general measurements procedures in anechoic chamber.		

5.9.4. Measurement Method

For uncritical results where a measurement resolution bandwidth of 1MHz can clearly show the compliance without influencing the results, a field strength measurement was performed to show compliance.

For critical results a Marker-Delta marker method was used for showing compliance to restricted bands. The method is according ANSI C63.10:2013, Chapter 6.10.6 "Marker-Delta method",. The method consists of three independent steps:

1. Step: Prior to the measurement the fundamental radiated In-Band field strength was performed. The determined value is used as reference value.

2. Step: Second step consist of finding the relative attenuation between the fundamental emission and the maximum local out-of-band emission (within 2 MHz range around the band edge either on the band-edge directly or some modulation product if the level is greater than that on the band-edge) when measured with lower resolution bandwidth.

3. Step: The delta value recorded in step 2 will be subtracted from value recorded in step 1, thus giving the required field strength at the band-edge. This value must fulfil the requirements for radiated spurious emissions in restricted bands in FCC §15.205 with the general limits of FCC §15.209 .

5.9.5. EUT settings

The EUT was instructed to send with maximum power (if adjustable) according to applicants instructions.

5.9.6. Results: for non-restricted bands near-by

5.9.6.1. Non-restricted bands near-by - limits according FCC §15.407

Diagram No.	Channel no.	Restricted band ?	Fundamental Value [dBuV/m]		Peak-Value at Band-Edge [dBuV/m]	Difference [dB]	Limit [dBc]	Margin [dB]	Verdict	Remark:
			Peak-Value	Average-Value						
9.07	37	no	90,19	81,45	50,64	39,56	20	19,556	PASS	BT-LE-GFSK-1Mbps

5.9.6.2. Restricted bands near-by §15.205 with limits accord. FCC §15.209

Diagram No.	Channel no.	Restricted band ?	Fundamental Value [dBuV/m]		Value at Band-Edge [dBuV/m]		Limits [dBuV/m]		Margin [dB]		Verdict	Remark:
			Peak-Value	Average-Value	Peak -Value	Average -Value	Peak -Value	Average -Value	Peak	Average		
9.08	39	yes	86,68	83,38	56,75	45,96	74	54	17,25	5,59	PASS	BT-LE-GFSK-1Mbps

Remark: pls. see chapter 5.1 for applicable duty-cycle correction factor for AV value

5.9.7. Verdict: Pass

5.10. Measurement uncertainties

The reported uncertainties are calculated based on the standard uncertainty multiplied with the appropriate coverage factor **k**, such that a confidence level of approximately 95% is achieved.
For uncertainty determination, each component used in the concrete measurement set-up was taken in account and it's contribution to the overall uncertainty according it's statistical distribution calculated.

Following table shows expectable uncertainties for each measurement type performed.

RF-Measurement	Reference	Frequency range	Calculated uncertainty based on a confidence level of 95%						Remarks
Conducted emissions (U_{CISPR})	CISPR 16-2-1	9 kHz - 150 kHz 150 kHz - 30 MHz	4.0 dB 3.6 dB						-
Radiated emissions Enclosure	CISPR 16-2-3	30 MHz - 1 GHz 1 GHz - 18 GHz	4.2 dB 5.1 dB						E-Field
Disturbance power	CISPR 16-2-2	30 MHz - 300 MHz	-						-
Power Output radiated	-	30 MHz - 4 GHz	3.17 dB						Substitution method
Power Output conducted	-	Set-up No.	Cel-C1	Cel-C2	BT1	W1	W2	--	
		9 kHz - 12.75 GHz	N/A	0.60	0.7	0.25	N/A	--	-
		12.75 - 26.5GHz	N/A	0.82	--	N/A	N/A	--	
Conducted emissions on RF-port	-	9 kHz - 2.8 GHz	0.70	N/A	0.70	N/A	0.69	--	N/A - not applicable
		2.8 GHz - 12.75GHz	1.48	N/A	1.51	N/A	1.43	--	
		12.75 GHz - 18GHz	1.81	N/A	1.83	N/A	1.77	--	
		18 GHz - 26.5GHz	1.83	N/A	1.85	N/A	1.79	--	
Occupied bandwidth	-	9 kHz - 4 GHz	0.1272 ppm (Delta Marker)						Frequency error
			1.0 dB						Power
Emission bandwidth	- -	9 kHz - 4 GHz	0.1272 ppm (Delta Marker)						Frequency error
			See above: 0.70 dB						Power
Frequency stability	-	9 kHz - 20 GHz	0.0636 ppm						-
Radiated emissions Enclosure	-	150 kHz - 30 MHz 30 MHz - 1 GHz 1 GHz - 20 GHz	5.0 dB 4.2 dB 3.17 dB						Magnetic field E-field Substitution

Table: measurement uncertainties, valid for conducted/radiated measurements

6. Abbreviations used in this report

The abbreviations	
ANSI	American National Standards Institute
AV , AVG, CAV	Average detector
EIRP	Equivalent isotropically radiated power, determined within a separate measurement
EGPRS	Enhanced General Packet Radio Service
EUT	Equipment Under Test
FCC	Federal Communications Commission, USA
IC	Industry Canada
n.a.	not applicable
Op-Mode	Operating mode of the equipment
PK	Peak
RBW	resolution bandwidth
RF	Radio frequency
RSS	Radio Standards Specification, Dokuments from Industry Canada
Rx	Receiver
TCH	Traffic channel
Tx	Transmitter
QP	Quasi peak detector
VBW	Video bandwidth
ERP	Effective radiated power

7. Accreditation details of CETECOM's laboratories and test sites

Ref.-No.	Accreditation Certificate	Valid for laboratory area or test site	Accreditation Body
-	D-PL-12047-01-01	All laboratories and test sites of CETECOM GmbH, Essen	DAkkS, Deutsche Akkreditierungsstelle GmbH
337 487 558 348 348	736496	Radiated Measurements 30 MHz to 1 GHz, 3 m / 10 m (OATS) Radiated Measurements 30 MHz to 1 GHz, 3 m (SAR) Radiated Measurements above 1 GHz, 3 m (FAR) Mains Ports Conducted Interference Measurements Telecommunication Ports Conducted Interference Measurem.	FCC, Federal Communications Commission Laboratory Division, USA (MRA US-EU 0003)
337 487 550 558	3462D-1 3462D-2 3462D-2 3462D-3	Radiated Measurements 30 MHz to 1 GHz, 3 m / 10 m (OATS) Radiated Measurements 30 MHz to 1 GHz, 3 m (SAR) Radiated Measurements 1 GHz to 6 GHz, 3 m (SAR) Radiated Measurements above 1 GHz, 3 m (FAR)	IC, Industry Canada Certification and Engineering Bureau
487 550 348 348	R-2666 G-301 C-2914 T-1967	Radiated Measurements 30 MHz to 1 GHz, 3 m (SAR) Radiated Measurements 1 GHz to 6 GHz, 3 m (SAR) Mains Ports Conducted Interference Measurements Telecommunication Ports Conducted Interference Measurem.	VCCI, Voluntary Control Council for Interference by Information Technology Equipment, Japan
OATS = Open Area Test Site, SAR = Semi Anechoic Room, FAR = Fully Anechoic Room			

8. Instruments and Ancillary

8.1. Used equiment "CTC"

The "Ref.-No" in the left column of the following tables allows the clear identification of the laboratory equipment.

8.1.1. Test software and firmware of equipment

Ref.-No.	Equipment	Type	Serial-No.	Version of Firmware or Software during the test
001	EMI Test Receiver	ESS	825132/017	Firm.= 1.21 , OTP=2.0, GRA=2.0
012	Signal Generator (EMS-cond.)	SMY 01	839069/027	Firm.= V 2.02
013	Power Meter (EMS cond.)	NRVD	839111/003	Firm.= V 1.51
017	Digital Radiocommunication Tester	CMD 60 M	844365/014	Firmware = V 3.52 .22.01.99, DECT = D2.87 13.01.99
053	Audio Analyzer	UPA3	860612/022	Firm. V 4.3
119	RT Harmonics Analyzer dig. Flickermeter	B10	G60547	Firm.= V 3.1DHG
140	Signal Generator	SMHU	831314/006	Firm.= 3.21
261	Thermal Power Sensor	NRV-Z55	825083/0008	EPROM-Datum 02.12.04, SE EE 1 B
262	Power Meter	NRV-S	825770/0010	Firm.= 2.6
263	Signal Generator	SMP 04	826190/0007	Firm.=3.21
295	Racal Digital Radio Test Set	6103	1572	UNIT Firmware= 4.04, SW-Main=4.04, SW-BBP=1.04, SW-DSP=1.02, Hardboot=1.02, Softboot=2.02
298	Univ. Radio Communication Tester	CMU 200	832221/091	R&S Test Firmware =3.53 /3.54 (current Testsoftw. f. all band used
323	Digital Radiocommunication Tester	CMD 55	825878/0034	Firm.= 3.52 .22.01.99
335	CTC-EMS-Conducted	System EMS Conducted	-	EMC 32 V 8.52
340	Digital Radiocommunication Tester	CMD 55	849709/037	Firm.= 3.52 .22.01.99
355	Power Meter	URV 5	891310/027	Firm.= 1.31
365	10V Insertion Unit 50 Ohm	URV5-Z2	100880	Eprom Data = 31.03.08
366	Ultra Compact Simulator	UCS 500 M4	V0531100594	Firm. UCS 500=001925/3.06a02, rc=ISMIEC 4.10
371	Bluetooth Tester	CBT32	100153	CBT V5,30+ SW-Option K55, K57
377	EMI Test Receiver	ESCS 30	100160	Firm.= 2.30, OTP= 02.01, GRA= 02.36
378	Broadband RF Field Monitor	RadiSense III	03D00013SNO-08	Firm.= V.03D13
389	Digital Multimeter	Keithley 2000	0583926	Firm. = A13 (Mainboard) A02 (Display)
392	Radio Communication Tester	MT8820A	6K00000788	Firm.= 4.50 #005, IPL=4.01#001,OS=4.02#001, GSM=4.41#013, W-CDMA= 4.54#004, scenario= 4.52#002
436	Univ. Radio Communication Tester	CMU 200	103083	R&S Test Firmware Base=5.14, Mess-Software= GSM:5.14 WCDMA:5.14 (current Testsoftw. F. all band
441	CTC-SAR-EMI Cable Loss	System EMI field (SAR)	-	EMC 32 Version 8.52
442	CTC-SAR-EMS	System EMS field (SAR)	-	EMC 32 Version 8.40
443	CTC-FAR-EMI-RSE	System CTC-FAR-EMI-RSE	-	Spuri 7.2.5 or EMC 32 Ver. 9.15.00
444	CTC-FAR-EMS field	System-EMS-Field (FAR)	-	EMC 32 Version 9.15.00
460	Univ. Radio Communication Tester	CMU 200	108901	R&S Test Firmware Base=5.14, GSM=5.14 WCDMA=5.14 (current Testsoftw.,f. all band to be used,
489	EMI Test Receiver	ESU40	1000-30	Firmware=4.43 SP3, Bios=V5.1-16-3, Spec. =01.00
491	ESD Simulator dito	ESD dito	dito307022	V 2.30
524	Voltage Drop Simulator	VDS 200	0196-16	Software Nr: 000037 Version V4.20a01
526	Burst Generator	EFT 200 A	0496-06	Software Nr. 000034 Version V2.32
527	Micro Pulse Generator	MPG 200 B	0496-05	Software-Nr. 000030 Version V2.43
528	Load Dump Simulator	LD 200B	0496-06	Software-Nr. 000031 Version V2.35a01
546	Univ. Radio Communication Tester	CMU 200	106436	R&S Test Firmware Base=5.14, GSM=5.14 WCDMA=5.14 (current Testsoftw.,f. all band to be used
547	Univ. Radio Communication Tester	CMU 200	835390/014	R&S Test Firmware Base=V5.1403 (current Testsoftw., f. all band used, GSM = 5.14 WCDMA: = 5.14
584	Spectrum Analyzer	FSU 8	100248	2.82_SP3
597	Univ. Radio Communication Tester	CMU 200	100347	R&S Test Firmware Base=5.01, GSM=5.02 WCDMA= not installed, Mainboard= µP1=V.850
598	Spectrum Analyzer	FSEM 30 (Reserve)	831259/013	Firmware Bios 3.40 , Analyzer 3.40 Sp 2
620	EMI Test Receiver	ESU 26	100362	4.43_SP3
642	Wideband Radio Communication Tester	CMW 500	126089	Setup V03.26, Test programm component V03.02.20
670	Univ. Radio Communication Tester	CMU 200	106833	µP1 =V8.50, Firmware = V.20
689	Vector Signal Generator	SMU200	100970	02.20.360.142
692	Bluetooth Tester	CBT 32	100236	CBT V 5.40, FW: V.2.41 (FPGA Digital, V. 3.09 FPGA RF)

8.1.2. Single instruments and test systems

Ref.-No.	Equipment	Type	Serial-No.	Manufacturer	Interval of calibration	Remark	Cal due
001	EMI Test Receiver	ESS	825132/017	Rohde & Schwarz	12 M	-	30.05.2017
005	AC - LISN (50 Ohm/50µH, test site 1)	ESH2-Z5	861741/005	Rohde & Schwarz	12 M	-	30.05.2017
007	Single-Line V-Network (50 Ohm/5µH)	ESH3-Z6	892563/002	Rohde & Schwarz	12 M	-	30.05.2017
009	Power Meter (EMS-radiated)	NRV	863056/017	Rohde & Schwarz	24 M	-	30.04.2017
016	Line Impedance Simulating Network	Op. 24-D	B6366	Spitzenberger+Spies	36 M	-	30.05.2019
020	Horn Antenna 18 GHz (Subst 1)	3115	9107-3699	EMCO	36/12 M	-	31.03.2017
021	Loop Antenna (H-Field)	6502	9206-2770	EMCO	36 M	-	30.04.2018
030	Loop Antenna (H-field)	HFH-Z2	879604/026	Rohde & Schwarz	36 M	-	30.04.2018
033	RF-current probe (100kHz-30MHz)	ESH2-Z1	879581/18	Rohde & Schwarz	24 M	-	30.04.2017
057	relay-switch-unit (EMS system)	RSU	494440/002	Rohde & Schwarz	pre-m	1a	
060	power amplifier (DC-2kHz)	PAS 5000	B6363	Spitzenberger+Spies	-	3	
066	notch filter (WCDMA; FDD1)	WRCT 1900/2200-5/40-10EEK	5	Wainwright GmbH	12 M	1g	30.06.2016
086	DC - power supply, 0 -10 A	LNG 50-10	-	Heinzinger Electronic	pre-m	2	
087	DC - power supply, 0 -5 A	EA-3013 S	-	Elektro Automatik	pre-m	2	
091	USB-LWL-Converter	OLS-1	007/2006	Ing. Büro Scheiba	-	4	
099	passive voltage probe	ESH2-Z3	299.7810.52	Rohde & Schwarz	36 M	-	30.04.2018
100	passive voltage probe	Probe TK 9416	without	Schwarzbeck	36 M	-	30.04.2018
110	USB-LWL-Converter	OLS-1	-	Ing. Büro Scheiba	-	4	
119	RT Harmonics Analyzer dig. Flickermeter	B10	G60547	BOCONSULT	36 M	-	30.05.2019
136	adjustable dipole antenna (Dipole 1)	3121C-DB4	9105-0697	EMCO	36 M	-	30.04.2018
140	Signal Generator	SMHU	831314/006	Rohde & Schwarz	24 M	-	30.05.2018
248	attenuator	SMA 6dB 2W	-	Radiall	pre-m	2	
249	attenuator	SMA 10dB 10W	-	Radiall	pre-m	2	
252	attenuator	N 6dB 12W	-	Radiall	pre-m	2	
256	attenuator	SMA 3dB 2W	-	Radiall	pre-m	2	
257	hybrid	4031C	04491	Narda	pre-m	2	
260	hybrid coupler	4032C	11342	Narda	pre-m	2	
261	Thermal Power Sensor	NRV-Z55	825083/0008	Rohde & Schwarz	24 M	-	30.05.2018
262	Power Meter	NRV-S	825770/0010	Rohde & Schwarz	24 M	-	30.05.2018
263	Signal Generator	SMP 04	826190/0007	Rohde & Schwarz	36 M	-	30.05.2019
265	peak power sensor	NRV-Z33, Model 04	840414/009	Rohde & Schwarz	24 M	-	30.05.2018
266	Peak Power Sensor	NRV-Z31, Model 04	843383/016	Rohde & Schwarz	24 M	-	30.05.2018
267	notch filter GSM 850	WRCA 800/960-6EEK	9	Wainwright GmbH	pre-m	2	
270	termination	1418 N	BB6935	Weinschel	pre-m	2	
271	termination	1418 N	BE6384	Weinschel	pre-m	2	
272	attenuator (20 dB) 50 W	Model 47	BF6239	Weinschel	pre-m	2	
273	attenuator (10 dB) 100 W	Model 48	BF9229	Weinschel	pre-m	2	
274	attenuator (10 dB) 50 W	Model 47 (10 dB) 50 W	BG0321	Weinschel	pre-m	2	
275	DC-Block	Model 7003 (N)	C5129	Weinschel	pre-m	2	
276	DC-Block	Model 7006 (SMA)	C7061	Weinschel	pre-m	2	
279	power divider	1515 (SMA)	LH855	Weinschel	pre-m	2	
287	pre-amplifier 25MHz - 4GHz	AMF-2D-100M4G-35-10P	379418	Miteq	12 M	1c	30.06.2017
291	high pass filter GSM 850/900	WHJ 2200-4EE	14	Wainwright GmbH	12 M	1c	30.06.2017
298	Univ. Radio Communication Tester	CMU 200	832221/091	Rohde & Schwarz	pre-m	3	
300	AC LISN (50 Ohm/50µH, 1-phase)	ESH3-Z5	892 239/020	Rohde & Schwarz	12 M	-	30.05.2017
301	attenuator (20 dB) 50W, 18GHz	47-20-33	AW0272	Lucas Weinschel	pre-m	2	
302	horn antenna 40 GHz (Meas 1)	BBHA9170	155	Schwarzbeck	36 M	-	31.03.2017
303	horn antenna 40 GHz (Subst 1)	BBHA9170	156	Schwarzbeck	36 M	-	31.03.2017
331	Climatic Test Chamber -40/+80 Grad	HC 4055	43146	Heraeus Vötsch	Pre-m	2	
341	Digital Multimeter	Fluke 112	81650455	Fluke	24 M	-	30.05.2018
342	Digital Multimeter	Voltcraft M-4660A	IB 255466	Voltcraft	24 M	-	30.04.2017
347	laboratory site	radio lab.	-	-	-	5	
348	laboratory site	EMI conducted	-	-	-	5	
354	DC - Power Supply 40A	NGPE 40/40	448	Rohde & Schwarz	pre-m	2	
355	Power Meter	URV 5	891310/027	Rohde & Schwarz	24 M	-	30.05.2018
357	power sensor	NRV-Z1	861761/002	Rohde & Schwarz	24 M	-	30.04.2017
371	Bluetooth Tester	CBT32	100153	R&S	36 M	-	30.05.2019
373	Single-Line V-Network (50 Ohm/5µH)	ESH3-Z6	100535	Rohde & Schwarz	12 M	-	30.05.2017
377	EMI Test Receiver	ESCS 30	100160	Rohde & Schwarz	12 M	-	30.05.2017
389	Digital Multimeter	Keithley 2000	0583926	Keithley	24 M	-	30.04.2017
392	Radio Communication Tester	MT8820A	6K00000788	Anritsu	12 M	-	30.05.2017
431	Model 7405	Near-Field Probe Set	9305-2457	EMCO	-	4	
436	Univ. Radio Communication Tester	CMU 200	103083	Rohde & Schwarz	12 M	-	30.04.2017
439	UltraLog-Antenna	HL 562	100248	Rohde & Schwarz	36 M	-	31.03.2017
443	CTC-FAR-EMI-RSE	System CTC-FAR-EMI-RSE	-	ETS-Lindgren / CETECOM	12 M	5	30.06.2017
448	notch filter WCDMA_FDD II	WRCT 1850.0/2170.0-5/40-	5	Wainwright Instruments GmbH	12 M	1c	30.06.2017
449	notch filter WCDMA FDD V	WRCT 824.0/894.0-5/40-8SSK	1	Wainwright	12 M	1c	30.06.2017
454	Oscilloscope	HM 205-3	9210 P 29661	Hameg	-	4	
456	DC-Power supply 0-5 A	EA 3013 S	207810	Elektro Automatik	pre-m	2	

Ref.-No.	Equipment	Type	Serial-No.	Manufacturer	Interval of calibration	Remark	Cal due
459	DC -Power supply 0-5 A , 0-32 V	EA-PS 2032-50	910722	Elektro Automatik	pre-m	2	
460	Univ. Radio Communication Tester	CMU 200	108901	Rohde & Schwarz	12 M	-	30.04.2017
463	Universal source	HP3245A	2831A03472	Agilent	-	4	
466	Digital Multimeter	Fluke 112	89210157	Fluke USA	24 M	-	30.05.2018
467	Digital Multimeter	Fluke 112	89680306	Fluke USA	36 M	-	30.04.2018
468	Digital Multimeter	Fluke 112	90090455	Fluke USA	36 M	-	30.04.2018
477	ReRadiating GPS-System	AS-47	-	Automotive Cons. Fink	-	3	
480	power meter (Fula)	NRVS	838392/031	Rohde & Schwarz	24 M	-	30.04.2017
482	filter matrix	Filter matrix SAR 1	-	CETECOM (Brl)	-	1d	
484	pre-amplifier 2,5 - 18 GHz	AMF-5D-02501800-25-10P	1244554	Miteq	12 M	-	30.06.2017
487	System CTC NSA-Verification SAR-EMI	System EMI field (SAR) NSA	-	ETS Lindgren / CETECOM	24 M	-	31.07.2017
489	EMI Test Receiver	ESU40	1000-30	Rohde & Schwarz	12 M	-	30.05.2017
502	band reject filter	WRCG 1709/1786-1699/1796-	SN 9	Wainwright	pre-m	2	
503	band reject filter	WRCG 824/849-814/859-	SN 5	Wainwright	pre-m	2	
512	notch filter GSM 850	WRCA 800/960-02/40-6EEK	SN 24	Wainwrght	12 M	1c	30.06.2017
517	relais switch matrix	HF Relais Box Keithley	SE 04	Keithley	pre-m	2	
523	Digital Multimeter	L4411A	MY46000154	Agilent	24 M	-	30.04.2017
529	6 dB Broadband resistive power divider	Model 1515	LH 855	Weinschel	pre-m	2	
530	10 dB Broadband resistive power divider	R 416110000	LOT 9828	-	pre-m	2	
546	Univ. Radio Communication Tester	CMU 200	106436	R&S	12 M	-	30.05.2017
547	Univ. Radio Communication Tester	CMU 200	835390/014	Rohde & Schwarz	12 M	-	30.04.2017
549	Log.Per-Antenna	HL025	1000060	Rohde & Schwarz	36/12 M	-	31.07.2018
550	System CTC S-VSWR Verification SAR-EMI	System EMI Field SAR S-VSWR	-	ETS Lindgren/CETECOM	24 M	-	31.07.2017
552	high pass filter 2,8-18GHz	WHKX 2.8/18G-10SS	4	Wainwright	12 M	1c	30.06.2017
557	System CTC-OTA-2	R&S TS8991	-	Rohde & Schwarz	12 M	5	30.09.2016
558	System CTC FAR S-VSWR	System CTC FAR S-VSWR	-	CTC	24 M	-	19.04.2017
574	Biconilog Hybrid Antenna	BTA-L	980026L	Frankonia	36/12 M	-	31.03.2019
584	Spectrum Analyzer	FSU 8	100248	Rohde & Schwarz	pre-m	-	
594	Wideband Radio Communication Tester	CMW 500	101757	Rohde & Schwarz	12 M	-	30.04.2017
597	Univ. Radio Communication Tester	CMU 200	100347	Rohde & Schwarz	pre-m	-	
598	Spectrum Analyzer	FSEM 30 (Reserve)	831259/013	Rohde & Schwarz	24 M	-	30.04.2017
600	power meter	NRVD (Reserve)	834501/018	Rohde & Schwarz	24 M	-	30.04.2017
601	medium-sensitivity diode sensor	NRV-Z5 (Reserve)	8435323/003	Rohde & Schwarz	24 M	-	30.04.2017
602	peak power sensor	NRV-Z32 (Reserve)	835080	Rohde & Schwarz	24 M	-	
611	DC power supply	E3632A	KR 75305854	Agilent	pre-m	2	
612	DC power supply	E3632A	MY 40001321	Agilent	pre-m	2	
613	Attenuator	R416120000 20dB 10W	Lot. 9828	Radiall	pre-m	2	
616	Digitalmultimeter	Fluke 177	88900339	Fluke	24 M	-	30.05.2018
617	Power Splitter/Combiner	ZFSC-2-2-S+	S F987001108	Mini Circuits	-	2	
618	Power Splitter/Combiner	50PD-634	600994	JFW Industries USA	-	2	
619	Power Splitter/Combiner	50PD-634	600995	JFW Industries, USA	-	3	
620	EMI Test Receiver	ESU 26	100362	Rohde-Schwarz	12 M	-	30.05.2017
621	Step Attenuator 0-139 dB	RSP	100017	Rohde & Schwarz	pre-m	2	
625	Generic Test Load USB	Generic Test Load USB	-	CETECOM	-	2	
627	data logger	OPUS 1	201.0999.9302.6.4.1.4 3	G. Lufft GmbH	24 M	-	30.04.2017
634	Spectrum Analyzer	FSM (HF-Unit)	826188/010	Rohde & Schwarz	pre-m	2	
637	High Speed HDMI with Ethernet 1m	HDMI cable with Ethernet 1m	-	KogiLink	-	2	
638	HDMI Kabel with Ethernet 1,5 m flach	HDMI cable with Ethernet	-	Reichelt	-	2	
640	HDMI cable 2m rund	HDMI cable 2m rund	-	Reichelt	-	2	
641	HDMI cable with Ethernet	Certified HDMI cable with	-	PureLink	-	2	
644	Amplifierer	ZX60-2534M+	SN865701299	Mini-Circuits	-	-	
670	Univ. Radio Communication Tester	CMU 200	106833	Rohde & Schwarz	24 M	-	30.05.2018
671	DC-power supply 0-5 A	EA-3013S	-	Elektro Automatik	pre-m	2	
678	Power Meter	NRP	101638	Rohde&Schwarz	pre-m	-	
683	Spectrum Analyzer	FSU 26	200571	Rohde & Schwarz	12 M	-	30.05.2017
686	Field Analyzer	EHP-200A	160WX30702	Narda Safety Test Solutions	24 M	-	30.04.2017
687	Signal Generator	SMF 100A	102073	Rohde&Schwarz	12 M	-	30.05.2017
688	Pre Amp	JS-18004000-40-8P	1750117	Miteq	pre-m	-	
690	Spectrum Analyzer	FSU	100302/026	Rohde&Schwarz	12 M	-	30.05.2017
692	Bluetooth Tester	CBT 32	100236	Rohde & Schwarz	36 M	-	31.03.2017
697	Power Splitter	ZN4PD-642W-S+	165001445	Mini-Circuits	-	2	

8.1.3. Legend

Note / remarks		Calibrated during system calibration:
	1a	System CTC-SAR-EMS (Ref.-No. 442)
	1b	System-CTC-EMS-Conducted (Ref.-No. 335)
	1c	System CTC-FAR-EMI-RSE (Ref.-No . 443)
	1d	System CTC-SAR-EMI (Ref.-No . 441)
	1e	System CTC-OATS (EMI radiated) (Ref.-No. 337)
	1 f	System CTC-CTIA-OTA (Ref.-No . 420)
	1 g	System CTC-FAR-EMS (Ref.-No . 444)
	2	Calibration or equipment check immediately before measurement
	3	Regulatory maintained equipment for functional check or support purpose
	4	Ancillary equipment without calibration e.g. mechanical equipment or monitoring equipment
	5	Test System

Interval of calibration	12 M	12 month
	24 M	24 month
	36 M	36 month
	24/12 M	Calibration every 24 months, between this every 12 months internal validation
	36/12 M	Calibration every 36 months, between this every 12 months internal validation
	Pre-m	Check before starting the measurement
	-	Without calibration

9. Versions of test reports (change history)

Version	Applied changes	Date of release
--	Initial release	2016-12-21
C1	Addition of IC-RSS regulations + EUT HW & SW version updated	2017-01-04