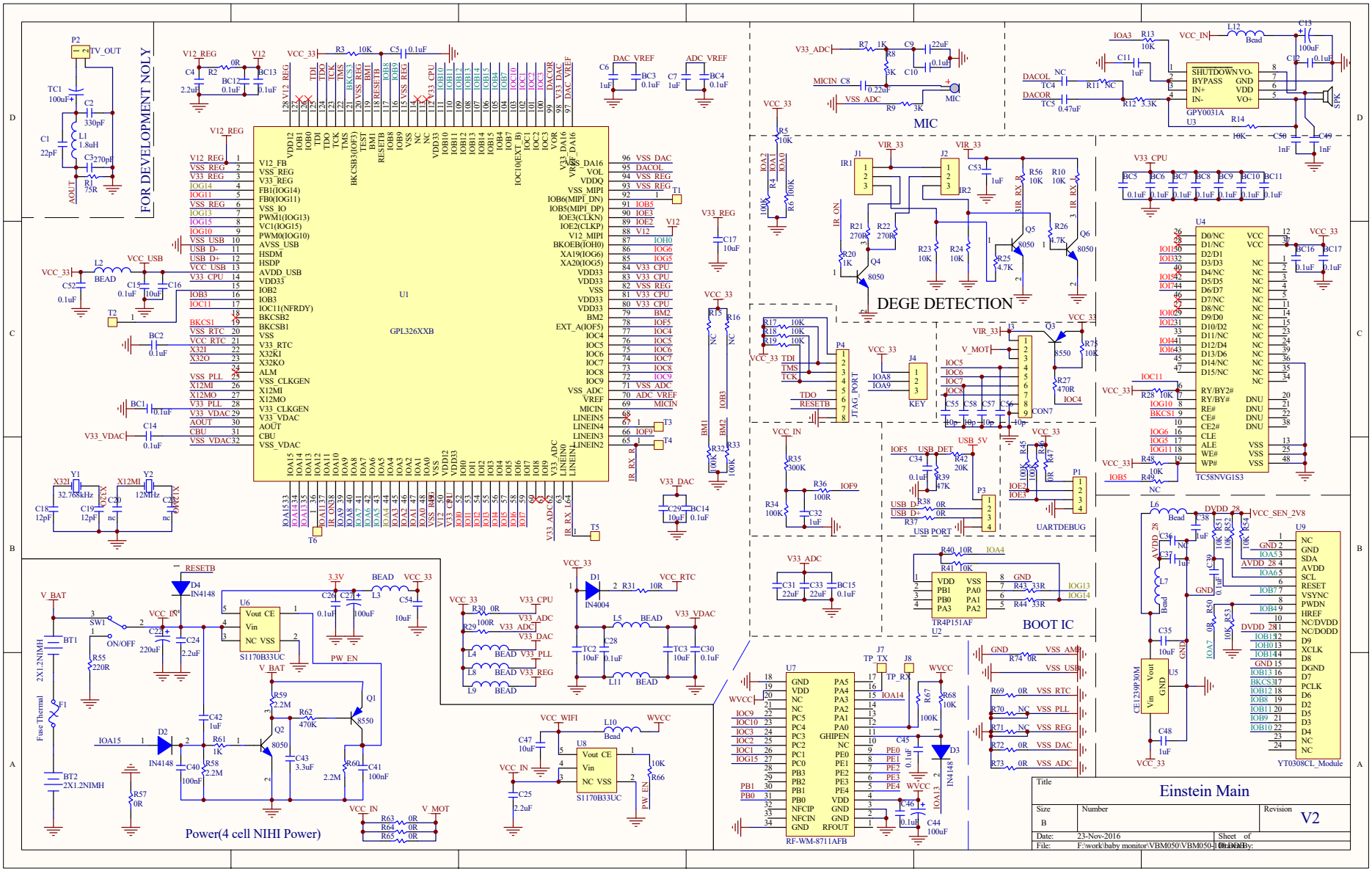
FOR DEVELOPMENT NOLY
U1
GPL326XXB
MIC
DEGE DETECTION
BOOT IC
Power(4 cell NIHI Power)
U4
TC58NVG1S3
U9
YT0308CL_Module
U7
RF-WM-8711AFB
U2
TR4P151AF
U3
GPY0031A
U5
CE1239P30M
U6
S1170B33UC
U8
S1170B33UC
Title
Einstein Main
Size
B
Number
Revision
V2
Date: 23-Nov-2016
Sheet of
File: F:\work\baby monitor\VBM050\VBM050-10.DDB
Drawn By:

Prepare

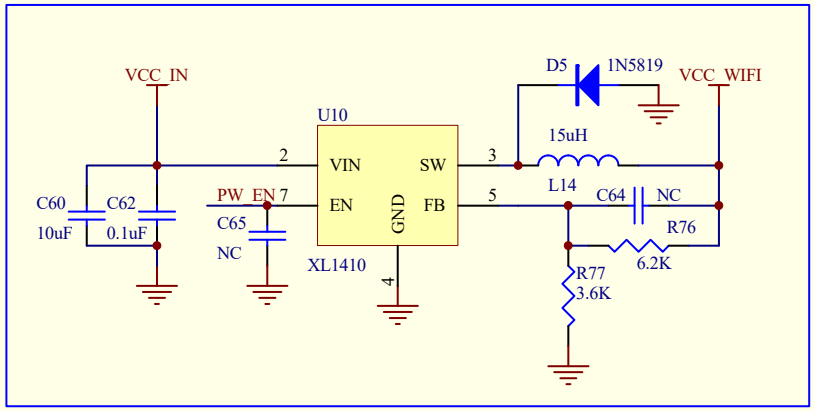

Title		
Einstein Main power		
Size B	Number	Revision
Date: 23-Nov-2016	Sheet of	
File: F:\work\baby monitor\VBM050\VBM050-1.DDB	Drawn By:	

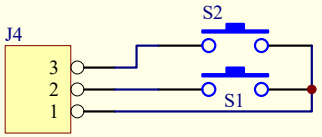

Title	Einstein_KEY	
Size B	Number	Revision V1
Date: 23-Nov-2016		Sheet of
File: F:\work\baby monitor\VBM050\VBM050-100.DDB		Drawn By:

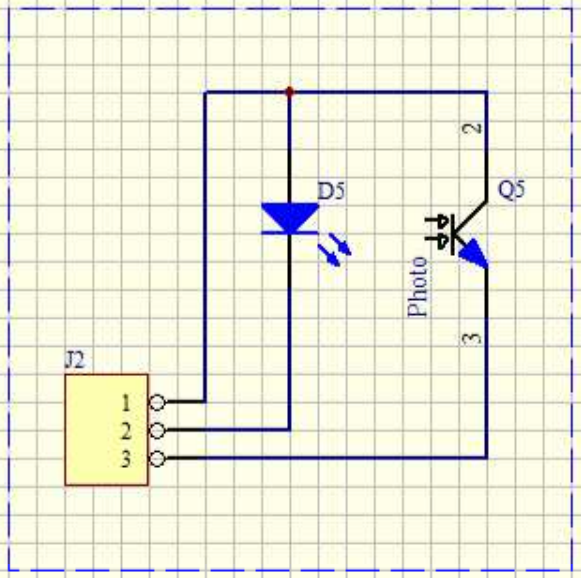

Einstein IR_L

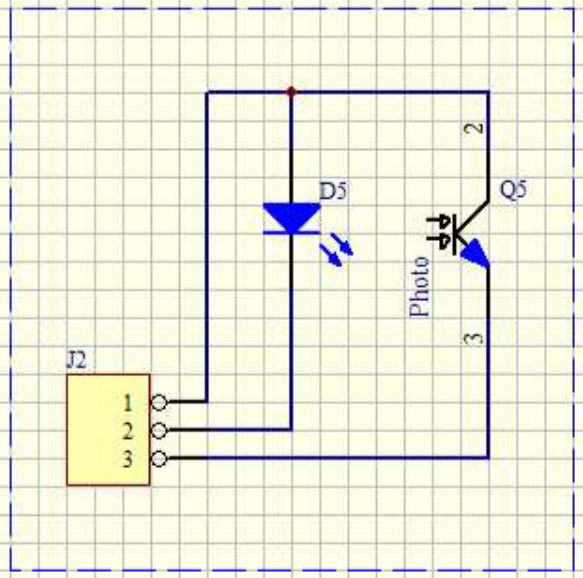

Einstein IR_R

Title	Einstein_IR		
Size B	Number		Revision V1
Date:	24-Nov-2016	Sheet of	
File:	F:\work\baby monitor\VBM050\VBM050-100.DDB	Drawn By:	

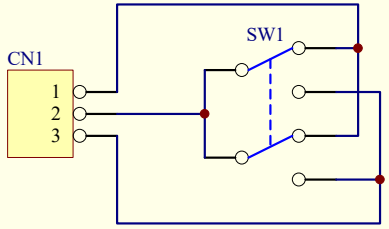

Title	Einstein_SW	
Size B	Number	Revision V1
Date: 23-Nov-2016		Sheet of
File: F:\work\baby monitor\VBM050\VBM050-100.SCH		Drawn By:

Mic_Body:

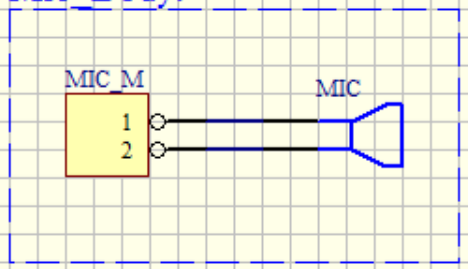

Mic_Left_Head:

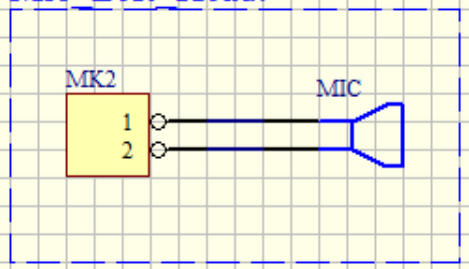

Mic_Right_Head:

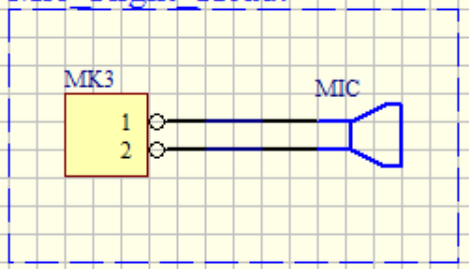

Title	Einstein_MIC		
Size B	Number		Revision V1
Date:	24-Nov-2016	Sheet of	
File:	F:\work\baby monitor\VBM050\VBM050-100.DDB	Drawn By:	

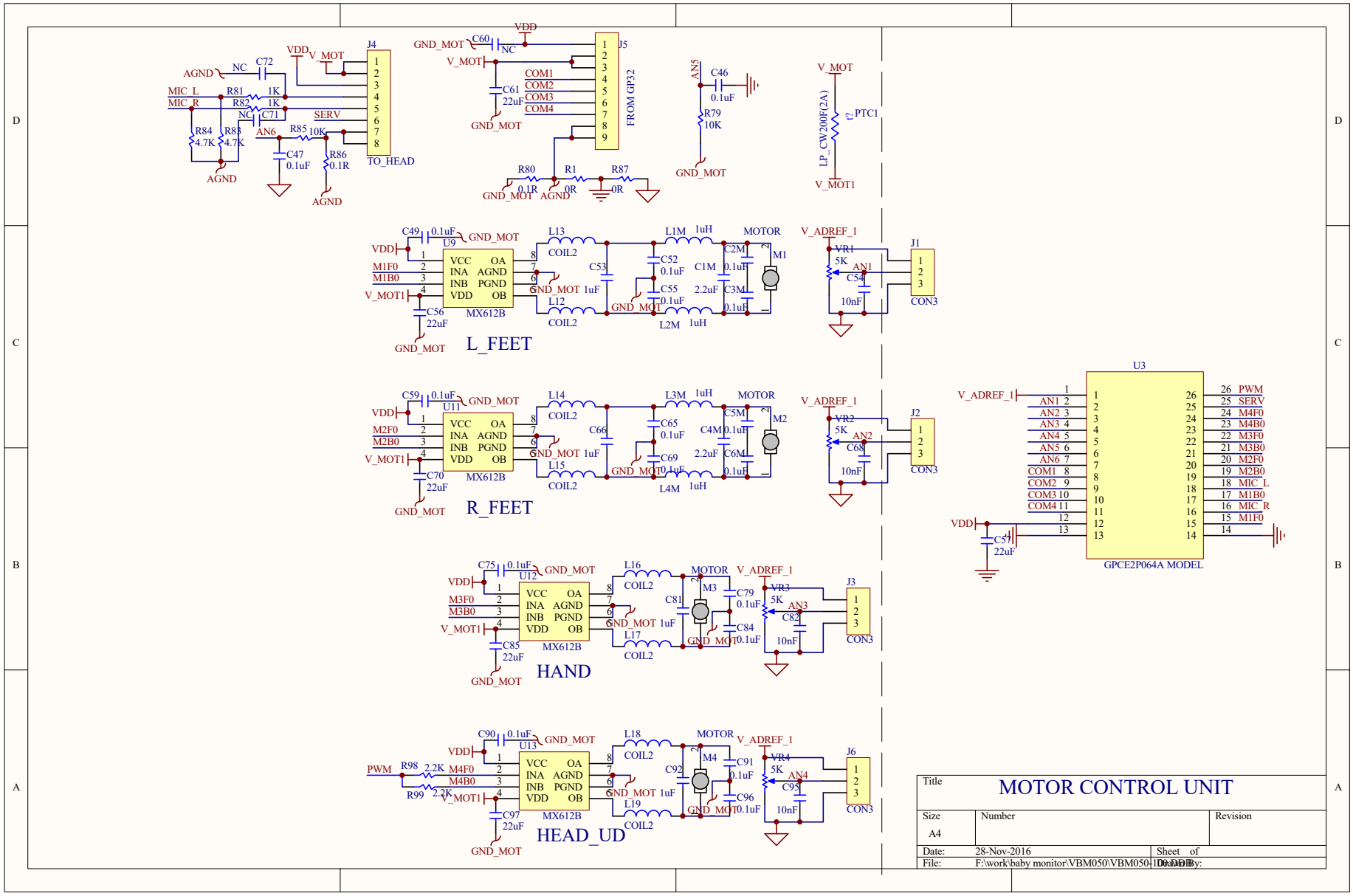

J4
TO_HEAD
J5
FROM GP32
PTC1
LP_CW200F(2A)
L_FEET
R_FEET
HAND
HEAD_UD
MX612B
MOTOR
CON3
U3
GPCE2P064A MODEL
Title
MOTOR CONTROL UNIT
Size
A4
Number
Revision
Date: 28-Nov-2016
Sheet of
File: F:\work\baby monitor\VBM050\VBM050-1D.DDB
Drawn By:

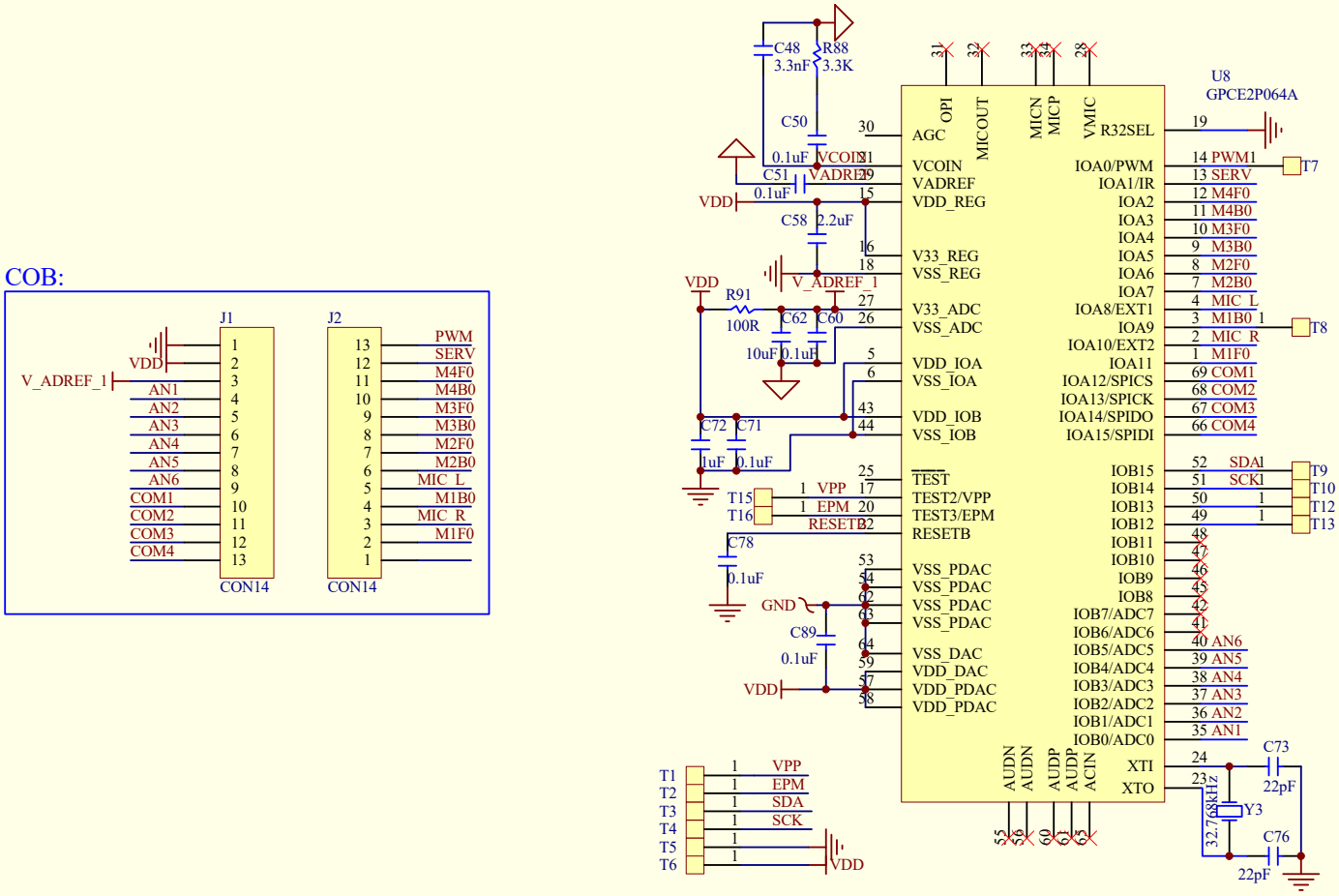
COB:
J1
J2
CON14
CON14
V_ADREF_1
VDD
AN1
AN2
AN3
AN4
AN5
AN6
COM1
COM2
COM3
COM4
PWM
SERV
M4F0
M4B0
M3F0
M3B0
M2F0
M2B0
MIC_L
M1B0
MIC_R
M1F0
U8
GPCE2P064A
C48
3.3nF
R88
3.3K
C50
0.1uF
C51
0.1uF
C58
2.2uF
R91
100R
C62
10uF
C60
0.1uF
C72
1uF
C71
0.1uF
C78
0.1uF
C89
0.1uF
GND
T15
T16
VPP
EPM
RESETB
AGC
VCOIN
VADREF
VDD_REG
V33_REG
VSS_REG
V33_ADC
VSS_ADC
VDD_IOA
VSS_IOA
VDD_IOB
VSS_IOB
TEST
TEST2/VPP
TEST3/EPM
RESETB
VSS_PDAC
VSS_DAC
VDD_DAC
VDD_PDAC
OPI
MICOUT
MICN
MICP
VMIC
R32SEL
IOA0/PWM
IOA1/IR
IOA2
IOA3
IOA4
IOA5
IOA6
IOA7
IOA8/EXT1
IOA9
IOA10/EXT2
IOA11
IOA12/SPICS
IOA13/SPICK
IOA14/SPIDO
IOA15/SPIDI
IOB15
IOB14
IOB13
IOB12
IOB11
IOB10
IOB9
IOB8
IOB7/ADC7
IOB6/ADC6
IOB5/ADC5
IOB4/ADC4
IOB3/ADC3
IOB2/ADC2
IOB1/ADC1
IOB0/ADC0
AUDN
AUDN
AUDP
AUDP
ACIN
XTI
XTO
T7
T8
T9
T10
T12
T13
SDA1
SCK1
C73
22pF
Y3
32.768kHz
C76
22pF
T1
T2
T3
T4
T5
T6
VPP
EPM
SDA
SCK
Title
Einstein_Motor COB
Size
B
Number
Revision
V1
Date:
23-Nov-2016
Sheet of
File:
Drawn By:

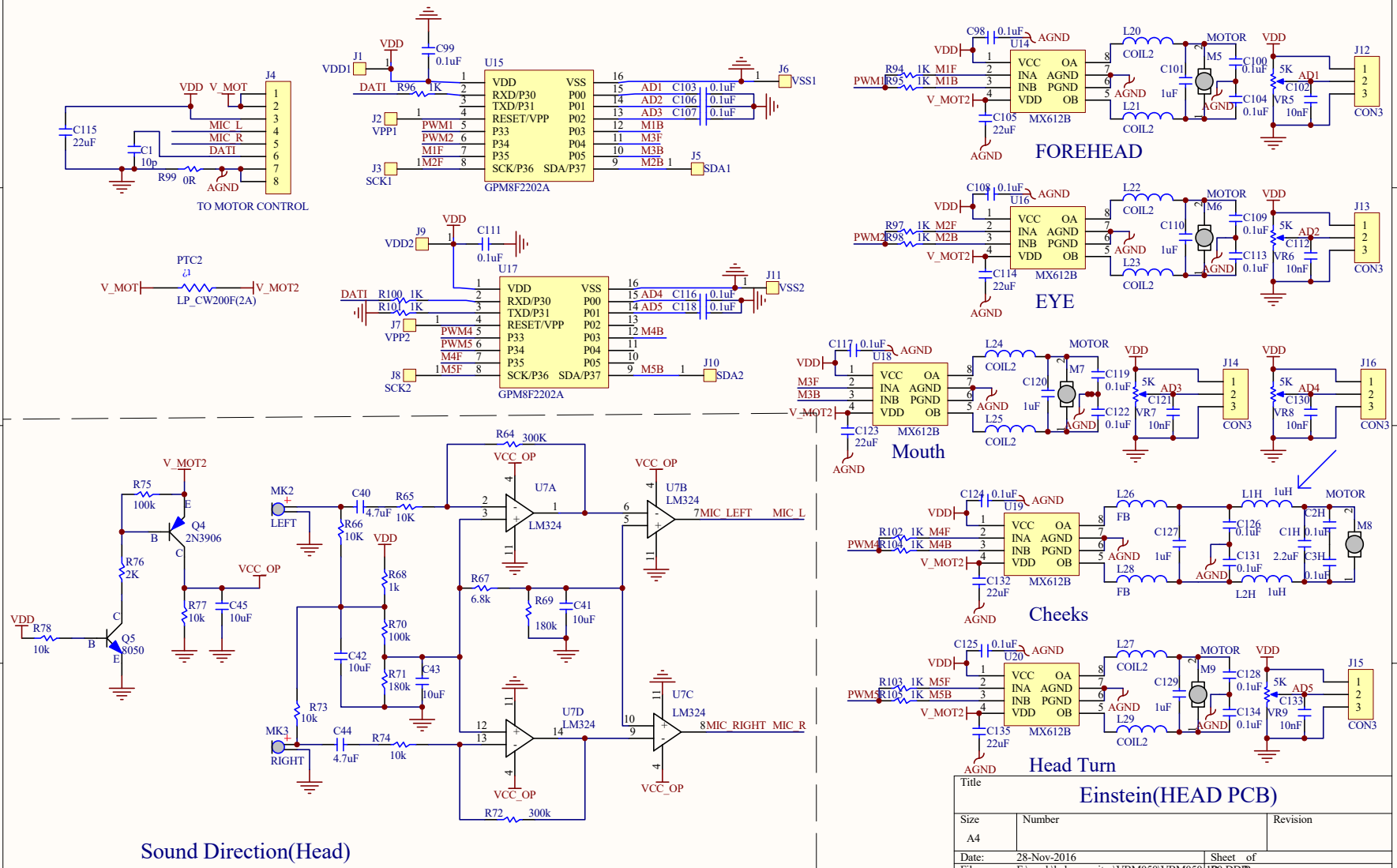
TO MOTOR CONTROL
GPM8F2202A
GPM8F2202A
LP_CW200F(2A)
FOREHEAD
EYE
Mouth
Cheeks
Head Turn
Sound Direction(Head)
Title
Einstein(HEAD PCB)
Size
A4
Number
Revision
Date: 28-Nov-2016
Sheet of
File: F:\work\baby monitor\VBM050\VBM050-1.DDB
Drawn By:

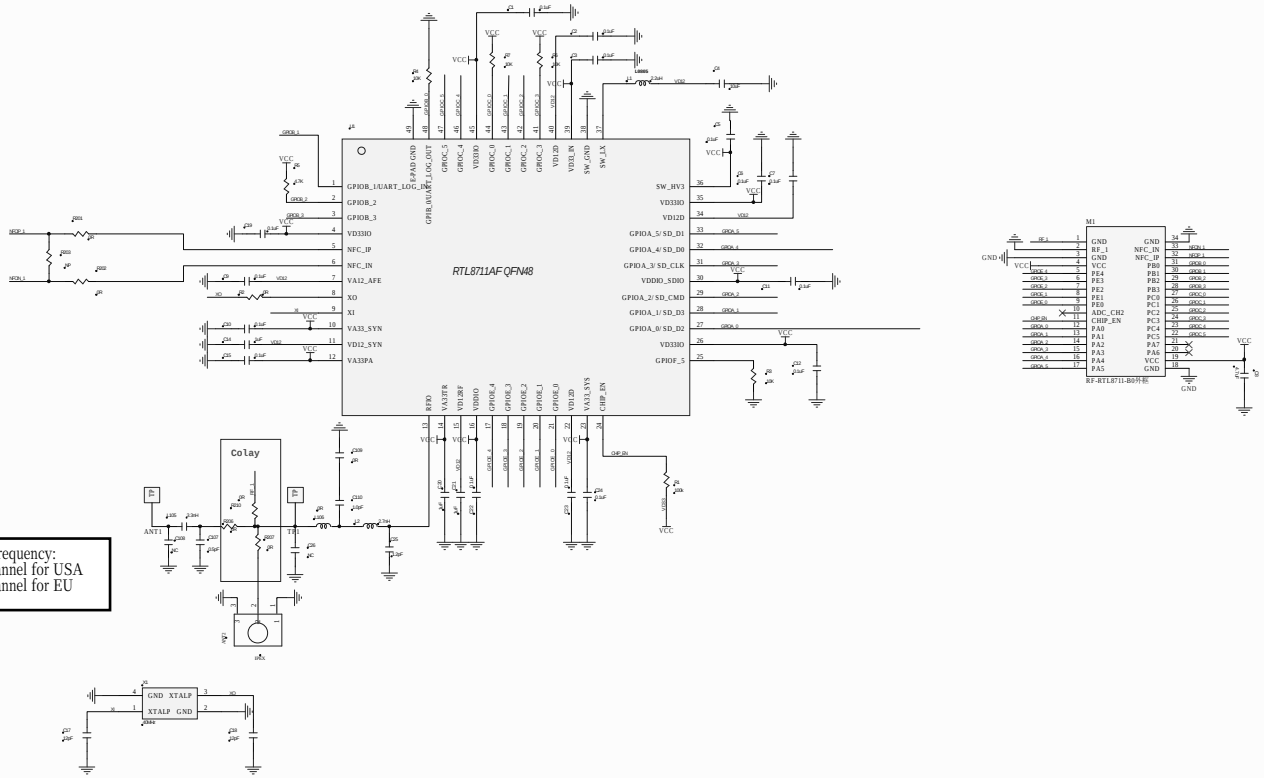

ANT. Frequency:
1~11channel for USA
1~13channel for EU

Title		
Size A1	Number	Revision
Date: 2017-2-8		Sheet of
File: C:\ali_RF-8711AF-B0.5c3d3ec		Drawn By: