Bluetooth®

Operation Manual

Dear Customer

Thank you for purchasing the L7A Bluetooth Noise-cancelling headphone . Please read this manual carefully and follow the instructions listed in order to optimize the use of your new headphones and enjoy your music the way it was meant to be heard.

Features:

Touch is simple - whatever volume control or music playWireless technolgy - enjoy every moment in your lifestyle

The Wireless Headphones is developed to deliver super round quality with Bluetooth 4.1V CSR 8635.
The Active Noise Cancelling technology reduce surrounding nosie up to 20dB and let you enjoy pure music without distraction.

Contents:

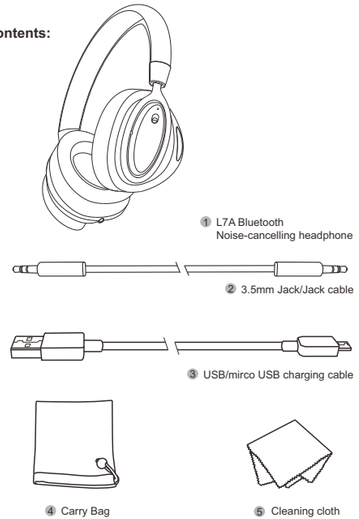

Specification

Bluetooth Parameters	
Bluetooth Version	Bluetooth V4.0+EDR
Bluetooth Protocol	A2DP, AVRCP, HSP, HFP
Talk time	≥8H
Music time	≥12H
Operating Range	≤10M

Acoustic Parameters	
Impedance	32Ω
Senstivity	116db
Frequency Response Range	20~20KHz
Max Input Power	20 mW

Battery

Before you use it for the first time, the L7A must be fully charged.
To do this, connect L7A to your computer via the USB to micro-USB cable. The indicator on the side of the right ear cup illuminates with a red light to show that the device is charging.
Once charging is complete, the indicator light turns off (1).

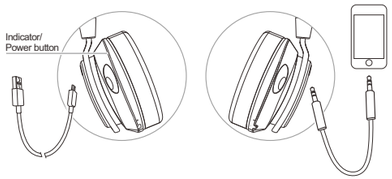

Figure 1 Figure 2

When the battery is flat, you can still use the L7A to listen to music if your audio player is connected to the headset via the Jack to Jack cable. Conversely, the telephone and Bluetooth music transfer functions and touch sensitive panel are not available (2).

Switching the L7A on/off

Press the button (1) to switch the product on/off.

Wearing the headset

Adjust the band without forcing it, so that the headphones will fit comfortably over your ears, then put the headset on, using the letters (L) and (R) to help you distinguish left and right.

Bluetooth Connection

Before L7A can be used with your telephone or Bluetooth audio player, the two devices must be paired(3) . Once the two devices have detected each other, it is no longer necessary to pair each time.

1. From your telephone or Bluetooth audio player, start a search for Bluetooth peripherals.
2. Select “L7A”

All Bluetooth Audio device Figure 3

Once your telephone is paired with the L7A, the two devices will connect to each other automatically each time that the L7A is switched on. It is not possible to simultaneously connect several devices to L7A.

Noise Cancelling:

1. Press the ANC Button ON, the Noise Cancelling Indicator is green.
2. After turn the noise cancelling on, you may hear a slight hissing noise, this is normal`will cease after a few seconds.
3.When using noise cancelling feature, if the battery is off, the green indicator is off, if you want to continue using noise cancelling feature, you need charge the battery. If you use wired connection you can continue use the headphones.

Volume/Using during a call (4)

To increase the volume, swipe your finger upward and pause one second on the touch sensitive panel.
To decrease the volume, swipe your finger downward and pause one second on the touch sensitive panel.

Figure 4 Figure 5

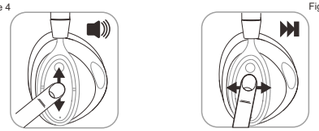

Next/Previous (5)

If your audio player is connected to the L7A via Bluetooth:
To return to the previous track, swipe your finger backward on the touch sensitive panel.
To move to the next track, swipe your finger forward on the touch sensitive panel.

Pause/Play

Press the power button to pause and play music.

Telephone

Press the power button to answer the phone call.
Press the power button again to end the phone call.
Press the power button twice to call the last number in your phone call records.

⚠ Warning

- Listening to music at high volumes for long periods can lead to hearing problems. We do not recommend using these headphones at maximum volume, particularly for long periods of time.
- To protect your hearing, turn down the volume of your music player before connecting your headphones. After putting on the headphones, gradually turn up the volume until you reach a suitable level. Sound levels are measured in decibels (dB). Exposure to sound 85 dB or above may result in gradual loss of hearing. Monitor your use. Hearing loss depends on the intensity of the sound and the duration. The higher the volume, the less your exposure capacity will last. The lower the volume, the longer your exposure period can be.
- Be responsible: pay attention to your environment (acoustic) when you are wearing your headphones and listening to music or the radio.
- Avoid hazardous behavior that may cause an accident for you or somebody else (pedestrians, motorcyclists, drivers, cyclists) or cause damage to property when you are wearing your headphones.
- Lezun would like to inform you that the use of stereo headphones is strictly forbidden when driving a motor vehicle. Lezun also recommends not listening to music or the radio through your headphones when riding a bicycle, a scooter or any other means of transport for which it is not compulsory to wear a helmet. Lezun can not accept any responsibility if you choose to ignore these warnings.

RoHS CE FC

FCC Statement

This equipment has been tested and found to comply with the limits for a Class C digital device, pursuant to Part 15 of the FCC Rules. These limits are designed to provide reasonable protection against harmful interference in a residential installation. This equipment generates uses and can radiate radio frequency energy and, if not installed and used in accordance with the instructions, may cause harmful interference to radio communications. However, there is no guarantee that interference will not occur in a particular installation. If this equipment does cause harmful interference to radio or television reception, which can be determined by turning the equipment off and on, the user is encouraged to try to correct the interference by one of the following measures:

- Reorient or relocate the receiving antenna.
- Increase the separation between the equipment and receiver.
- Connect the equipment into an outlet on a circuit different from that to which the receiver is connected.
- Consult the dealer or an experienced radio/TV technician for help.

FCC NOTICE

This device complies with Part 15 of the FCC Rules. Operation is subject to the following two conditions:
1 This device may not cause harmful interference, and
2 This device must accept any interference received, including interference that may cause undesired operation.

FCC CAUTION

- Any changes or modifications not expressly approved by the party responsible for compliance could void the user’s authority to operate this equipment.
- This device and its antenna(s) must not be co-located or operating in conjunction with any other antenna or transmitter.

FCC ID: 2AKFED105
To locate the FCC and IC identification numbers, please look on the underside of the Lezun.

CE We, Lezun, declare under our sole responsibility, that the product Lezun L7A, confirms with the provisions of the following Directives: 1999/5/EC; 2004/108/EC and 2006/95/EC.

The crossed-out wheelie bin symbol means that the product must be disposed of separately in the European Union. These products must not be disposed of with unsorted household waste.

Mac®, iPad®, iPhone®, iPod® are trademarks of Apple Inc., registered in the U.S. and other countries.
BlackBerry® is a registered trademark of Research in Motion Limited.
Samsung is a registered trademark of Samsung Electronics Co., Ltd.
Android™ is a trademark of Google Inc.
Windows® is a registered trademark of Microsoft corporation in the United States and other countries.
The Bluetooth® word mark and logo are registered trademarks and are owned by the Bluetooth SIG, Inc.
All other registered and unregistered are the property of their respective owers.