FCC REPORT

Report Reference No. ..... :	**CHTEW21110175**
Project No.....:	**SHT2106117003EW**
FCC ID ..... :	**2AKFL-C6200**
Applicant's name ..... :	**Shenzhen Handheld-Wireless Technology Co., Ltd**
Address.....:	East of 4th Floor, Building A, PowerLeader Science&Technology Park, Guanhu Street, Longhua District, Shenzhen, China
Test item description ..... :	**Mobile Data Terminal**
Trade Mark .....:	Handheld-Wireless
Model/Type reference.....:	C6200
Listed Model(s) .....:	C6000, C3200, C6
Standard ..... :	**FCC CFR Title 47 Part 2** **FCC CFR Title 47 Part 22** **FCC CFR Title 47 Part 24** **FCC CFR Title 47 Part 27**
Date of receipt of test sample.....:	Sep. 15, 2021
Date of testing.....:	Sep. 16, 2021-Nov. 17, 2021
Date of issue.....:	Nov. 18, 2021
Result..... .....:	**Pass**

Report Verification:

Compiled by (position+printedname+signature)...:	File administrators Silvia Li	Silvia Li
Supervised by (position+printedname+signature)....:	Project Engineer Aaron Fang	Aaron.Fang
Approved by (position+printedname+signature)....:	Manager Hans Hu	Hans Hu

Testing Laboratory Name ..... :	**Shenzhen Huatongwei International Inspection Co., Ltd.**
Address.....:	1/F, Bldg 3, Hongfa Hi-tech Industrial Park, Genyu Road, Tianliao, Gongming, Shenzhen, China

Shenzhen Huatongwei International Inspection Co., Ltd. All rights reserved.

This publication may be reproduced in whole or in part for non-commercial purposes as long as the Shenzhen Huatongwei International Inspection Co., Ltd. is acknowledged as copyright owner and source of the material. Shenzhen Huatongwei International Inspection Co., Ltd. takes no responsibility for and will not assume liability for damages resulting from the reader's interpretation of the reproduced material due to its placement and context.

The test report merely correspond to the test sample.

Contents

1.	**TEST STANDARDS AND REPORT VERSION**	**3**
1.1.	**Applicable Standards**	**3**
1.2.	**Report version information**	**3**
2.	**TEST DESCRIPTION**	**4**
3.	**SUMMARY**	**5**
3.1.	**Client Information**	**5**
3.2.	**Product Description**	**5**
3.3.	**Operation state**	**6**
3.4.	**EUT operation mode**	**7**
3.5.	**EUT configuration**	**7**
3.6.	**Modifications**	**7**
4.	**TEST ENVIRONMENT**	**8**
4.1.	**Testing Laboratory Information**	**8**
4.2.	**Equipments Used during the Test**	**8**
4.3.	**Environmental conditions**	**9**
4.4.	**Statement of the measurement uncertainty**	**9**
5.	**TEST CONDITIONS AND RESULTS**	**10**
5.1.	**Conducted Output Power**	**10**
5.2.	**Peak-to-Average Ratio**	**11**
5.3.	**99% Occupied Bandwidth & 26 dB Bandwidth**	**12**
5.4.	**Band Edge**	**13**
5.5.	**Conducted Spurious Emissions**	**14**
5.6.	**Frequency stability VS Temperature measurement**	**15**
5.7.	**Frequency stability VS Voltage measurement**	**16**
5.8.	**ERP and EIRP**	**17**
5.9.	**Radiated Spurious Emission**	**18**
6.	**TEST SETUP PHOTOS OF THE EUT**	**29**
7.	**EXTERNAL AND INTERNAL PHOTOS OF THE EUT**	**29**
8.	**APPENDIX REPORT**	**29**

1. TEST STANDARDS AND REPORT VERSION

1.1. Applicable Standards

The tests were performed according to following standards:

FCC Rules Part 2: FREQUENCY ALLOCATIONS AND RADIO TREATY MATTERS; GENERAL RULES AND REGULATIONS
FCC Rules Part 22: PUBLIC MOBILE SERVICES
FCC Rules Part 24: PERSONAL COMMUNICATIONS SERVICES
FCC Rules Part 27: MISCELLANEOUS WIRELESS COMMUNICATIONS SERVICES
ANSI C63.26: 2015: American National Standard for Compliance Testing of Transmitters Used in Licensed Radio Services
KDB 971168 D01 Power Meas License Digital Systems v03: MEASUREMENT GUIDANCE FOR CERTIFICATION OF LICENSED DIGITAL TRANSMITTERS

1.2. Report version information

Revision No.	Date of issue	Description
N/A	2021-11-18	Original

2. Test Description

Test Item	Section in CFR 47	Result	Test Engineer
Conducted Output Power	Part 2.1046 Part 22.913(a) Part 24.232(c) Part 27.50	Pass	Jiongsheng Feng
Peak-to-Average Ratio	Part 24.232 Part 27.50	Pass	Jiongsheng Feng
99% Occupied Bandwidth & 26 dB Bandwidth	Part 2.1049 Part 22.917(b) Part 24.238(b) Part 27.53	Pass	Jiongsheng Feng
Band Edge	Part 2.1051 Part 22.917 Part 24.238 Part 27.53	Pass	Jiongsheng Feng
Conducted Spurious Emissions	Part 2.1051 Part 22.917 Part 24.238 Part 27.53	Pass	Jiongsheng Feng
Frequency stability VS Temperature	Part 2.1055(a)(1)(b) Part 22.355 Part 24.235 Part 27.54	Pass	Jiongsheng Feng
Frequency stability VS Voltage	Part 2.1055(d)(1)(2) Part 22.355 Part 24.235 Part 27.54	Pass	Jiongsheng Feng
ERP and EIRP	Part 22.913(a) Part 24.232(b) Part 27.50	Pass	Pan Xie
Radiated Spurious Emissions	Part 2.1053 Part 22.917 Part 24.238 Part 27.53	Pass	Pan Xie

Note: The measurement uncertainty is not included in the test result.

3. SUMMARY

3.1. Client Information

Applicant:	Shenzhen Handheld-Wireless Technology Co., Ltd
Address:	East of 4th Floor, Building A, PowerLeader Science&Technology Park, Guanhu Street, Longhua District, Shenzhen, China
Manufacturer:	Shenzhen Handheld-Wireless Technology Co., Ltd
Address:	East of 4th Floor, Building A, PowerLeader Science&Technology Park, Guanhu Street, Longhua District, Shenzhen, China

3.2. Product Description

Name of EUT:	Mobile Data Terminal		
Trade Mark:	Handheld-Wireless		
Model No.:	C6200		
Listed Model(s):	C6000, C3200, C6		
SIM Information:	Support Two SIM Card		
Power supply:	DC 3.8V		
Adapter information:	Model: GME10C-050200FUu Input: 100-240Vd,c., 50-60Hz, 0.28A Output: 5.0Va.c., 2.0A		
Hardware version:	V1.0		
Software version:	Android 10.0		
4G			
Operation Band:	☒ FDD Band 4	☒ FDD Band 7	☒ FDD Band 17
Transmit frequency:	FDD Band 4: FDD Band 7: FDD Band 17:	1710.7 MHz – 1754.3 MHz 2502.5 MHz – 2567.5 MHz 706.5 MHz – 713.5 MHz	
Receive frequency:	FDD Band 4: FDD Band 7: FDD Band 17:	2110.7 MHz – 2154.3 MHz 2622.5 MHz – 2687.5 MHz 736.5 MHz – 743.5 MHz	
Channel bandwidth:	FDD Band 4: FDD Band 7: FDD Band 17:	1.4MHz, 3MHz, 5MHz, 10MHz, 15MHz, 20MHz 5MHz, 10MHz, 15MHz, 20MHz 5MHz, 10MHz	
Power Class:	Class 3		
Modulation type:	QPSK, 16QAM		
Antenna type	Loop Antenna		
Antenna Gain	Band4:0.9dBi Band7:0.7dBi Band17:-0.9dBi		

3.3. Operation state

➢ **Test frequency list**

FDD Band 4

Test Frequency ID	Bandwidth [MHz]	N_{UL}	Frequency of Uplink [MHz]	N_{DL}	Frequency of Downlink [MHz]
Low Range	1.4	19957	1710.7	1957	2110.7
	3	19965	1711.5	1965	2111.5
	5	19975	1712.5	1975	2112.5
	10	20000	1715	2000	2115
	15	20025	1717.5	2025	2117.5
	20	20050	1720	2050	2120
Mid Range	1.4/3/5/10/15/20	20175	1732.5	2175	2132.5
High Range	1.4	20393	1754.3	2393	2154.3
	3	20385	1753.5	2385	2153.5
	5	20375	1752.5	2375	2152.5
	10	20350	1750	2350	2150
	15	20325	1747.5	2325	2147.5
	20	20300	1745	2300	2145

FDD Band 7

Test Frequency ID	Bandwidth [MHz]	N_{UL}	Frequency of Uplink [MHz]	N_{DL}	Frequency of Downlink [MHz]
Low Range	5	20775	2502.5	2775	2622.5
	10	20800	2505	2800	2625
	15	20825	2507.5	2825	2627.5
	20 [1]	20850	2510	2850	2630
Mid Range	5/10/15 20 [1]	21100	2535	3100	2655
High Range	5	21425	2567.5	3425	2687.5
	10	21400	2565	3400	2685
	15	21375	2562.5	3375	2682.5
	20 [1]	21350	2560	3350	2680

NOTE 1: Bandwidth for which a relaxation of the specified UE receiver sensitivity requirement (TS 36.101 [27] Clause 7.3) is allowed.

FDD Band 17

Test Frequency ID	Bandwidth [MHz]	N_{UL}	Frequency of Uplink [MHz]	N_{DL}	Frequency of Downlink [MHz]
Low Range	5 [1]	23755	706.5	5755	736.5
	10 [1]	23780	709	5780	739
Mid Range	5 [1]/10 [1]	23790	710	5790	740
High Range	5 [1]	23825	713.5	5825	743.5
	10 [1]	23800	711	5800	741

NOTE 1: Bandwidth for which a relaxation of the specified UE receiver sensitivity requirement (TS 36.101 [27] Clause 7.3) is allowed.

3.4. EUT operation mode

For RF test items
The EUT has been tested under typical operating condition. Testing was performed by configuring EUT to maximum output power status.

Test Items	Band	Bandwidth (MHz)						Modulation		RB #		
		1.4	3	5	10	15	20	QPSK	16QAM	1	Half	Full
Conducted Output Power	4	○	○	○	○	○	○	○	○	○	○	○
	7	-	-	○	○	○	○	○	○	○	○	○
	17	-	-	○	○	-	-	○	○	○	○	○
Peak-to-Average Ratio	4	○	○	○	○	○	○	○	○	○	-	○
	7	-	-	○	○	○	○	○	○	○	-	○
	17	-	-	○	○	-	-	○	○	○	-	○
99% Occupied Bandwidth & 26 dB Bandwidth	4	○	○	○	○	○	○	○	○	-	-	○
	7	-	-	○	○	○	○	○	○	-	-	○
	17	-	-	○	○	-	-	○	○	-	-	○
Band Edge	4	○	○	○	○	○	○	○	○	○	-	○
	7	-	-	○	○	○	○	○	○	○	-	○
	17	-	-	○	○	-	-	○	○	○	-	○
Conducted Spurious Emission	4	○	○	○	○	○	○	○	○	○	-	-
	7	-	-	○	○	○	○	○	○	○	-	-
	17	-	-	○	○	-	-	○	○	○	-	-
Frequency Stability	4	○	○	○	○	○	○	○	○	-	-	○
	7	-	-	○	○	○	○	○	○	-	-	○
	17	-	-	○	○	-	-	○	○	-	-	○
ERP and EIRP	4	○	○	○	○	○	○	○	○	○	-	-
	7	-	-	○	○	○	○	○	○	○	-	-
	17	-	-	○	○	-	-	○	○	○	-	-
Radiated Spurious Emission	4	-	-	-	-	-	○	○	-	○	-	-
	7	-	-	-	-	-	○	○	-	○	-	-
	17	--	-	-	○	-	-	○	-	○	-	-
Remark	1. The mark " ○"means that this configuration is chosenfor testing 2. The mark "-"means that this bandwidth is not test. 3. The device is investigatedfrom 30MHz to10 times offundamental signal for radiated spurious emission test under different RB size/offset and modulations in exploratory test. Subsequently, only the worst case emissions are reported.											

3.5. EUT configuration

The following peripheral devices and interface cables were connected during the measurement:

● - supplied by the manufacturer

○ - supplied by the lab

○	/	Manufacturer:	/
		Model No.:	/
○	/	Manufacturer:	/
		Model No.:	/

3.6. Modifications

No modifications were implemented to meet testing criteria.

4. TEST ENVIRONMENT

4.1. Testing Laboratory Information

Laboratory Name	Shenzhen Huatongwei International Inspection Co., Ltd.	
Laboratory Location	1/F, Bldg 3, Hongfa Hi-tech Industrial Park, Genyu Road, Tianliao, Gongming, Shenzhen, China	
Connect information:	Tel: 86-755-26715499 E-mail: cs@szhtw.com.cn http://www.szhtw.com.cn	
Qualifications	Type	Accreditation Number
	FCC	762235

4.2. Equipments Used during the Test

Used	Test Equipment	Manufacturer	Equipment No.	Model No.	Serial No.	Last Cal. Date (YY-MM-DD)	Next Cal. Date (YY-MM-DD)
●	Signal and spectrum Analyzer	R&S	HTWE0242	FSV40	100048	2021/9/13	2022/9/12
●	Signal & Spectrum Analyzer	R&S	HTWE0262	FSW26	103440	2021/9/13	2022/9/12
●	Spectrum Analyzer	Agilent	HTWE0286	N9020A	MY50510187	2021/9/13	2022/9/12
●	Radio communication tester	R&S	HTWE0287	CMW500	137688-Lv	2021/9/13	2022/9/12
●	Test software	Tonscend	N/A	JS1120	N/A	N/A	N/A
●	Radiated Spurious Emission						
Used	Test Equipment	Manufacturer	Equipment No.	Model No.	Serial No.	Last Cal. Date (YY-MM-DD)	Next Cal. Date (YY-MM-DD)
●	Semi-Anechoic Chamber	Albatross projects	HTWE0122	SAC-3m-01	N/A	2018/09/27	2022/09/26
●	Spectrum Analyzer	R&S	HTWE0098	FSP40	100597	2021/9/13	2022/9/12
●	Loop Antenna	R&S	HTWE0170	HFH2-Z2	100020	2021/04/06	2022/04/05
●	Broadband Horn Antenna	SCHWARZBECK	HTWE0103	BBHA9170	BBHA9170472	2020/4/27	2023/4/27
●	Ultra-Broadband Antenna	SCHWARZBECK	HTWE0123	VULB9163	538	2021/04/06	2022/04/05
●	Horn Antenna	SCHWARZBECK	HTWE0126	9120D	1011	2020/04/01	2023/03/31
●	Pre-amplifier	CD	HTWE0071	PAP-0102	12004	2021/11/5	2022/11/4
●	Broadband Preamplifier	SCHWARZBECK	HTWE0201	BBV 9718	9718-248	2021/03/05	2022/03/04
●	RF Connection Cable	HUBER+SUHNER	HTWE0120-01	6m 18GHz S Serisa	N/A	2021/02/26	2022/02/25
●	RF Connection Cable	HUBER+SUHNER	HTWE0120-02	6m 3GHz RG Serisa	N/A	2021/02/26	2022/02/25
●	RF Connection Cable	HUBER+SUHNER	HTWE0120-03	6m 3GHz RG Serisa	N/A	2021/02/26	2022/02/25
●	RF Connection Cable	HUBER+SUHNER	HTWE0120-04	6m 3GHz RG Serisa	N/A	2021/02/26	2022/02/25
●	RF Connection Cable	HUBER+SUHNER	HTWE0121-01	6m 18GHz S Serisa	N/A	2021/02/26	2022/02/25
●	EMI Test Software	Audix	N/A	E3	N/A	N/A	N/A
●	Auxiliary Equipment						
Used	Test Equipment	Manufacturer	Equipment No.	Model No.	Serial No.	Last Cal. Date (YY-MM-DD)	Next Cal. Date (YY-MM-DD)
●	Climate chamber	ESPEC	HTWE0254	GPL-2	N/A	2021/9/14	2022/9/13
●	DC Power Supply	Gwinstek	HTWE0274	SPS-2415	GER835793	N/A	N/A

4.3. Environmental conditions

During the measurement the environmental conditions were within the listed ranges:

Voltage	VN=Nominal Voltage	DC 3.80V
	VL=Lower Voltage	DC 3.60V
	VH=Higher Voltage	DC 4.35V
Temperature	TN=Normal Temperature	25 °C
	Extreme Temperature	From −30° to + 50° centigrade
Humidity	30~60 %	
Air Pressure	950-1050 hPa	

4.4. Statement of the measurement uncertainty

The data and results referenced in this document are true and accurate. The reader is cautioned that there may be errors within the calibration limits of the equipment and facilities. The measurement uncertainty was calculated for all measurements listed in this test report acc. to TR-100028-01”Electromagnetic compatibilityand Radio spectrum Matters (ERM);Uncertainties in the measurementof mobile radio equipment characteristics;Part 1”and TR-100028-02 “Electromagnetic compatibilityand Radio spectrum Matters (ERM);Uncertainties in the measurementof mobile radio equipment characteristics;Part 2 “ and is documented in the Shenzhen Huatongwei International Inspection Co., Ltd quality system acc. to DIN EN ISO/IEC 17025. Furthermore, component and process variability of devices similar to that tested may result in additional deviation. The manufacturer has the sole responsibility of continued compliance of the device.

Hereafter the best measurement capability for Shenzhen Huatongweilaboratory is reported:

Test Items	Measurement Uncertainty	Notes
Transmitter power conducted	0.51 dB	(1)
Transmitter power Radiated	2.66dB for <1GHz 3.44dB for >1GHz	(1)
Conducted spurious emissions 9kHz~40GHz	0.51 dB	(1)
Radiated spurious emissions	2.66dB for <1GHz 3.44dB for >1GHz	(1)
Occupied Bandwidth	15Hz for <1GHz 70Hz for >1GHz	(1)
Frequency error	15Hz for <1GHz 70Hz for >1GHz	(1)

(1) This uncertainty represents an expanded uncertainty expressed at approximately the 95% confidence level using a coverage factor of k=1.96.

5. TEST CONDITIONS AND RESULTS

5.1. Conducted Output Power

LIMIT

N/A

TEST CONFIGURATION

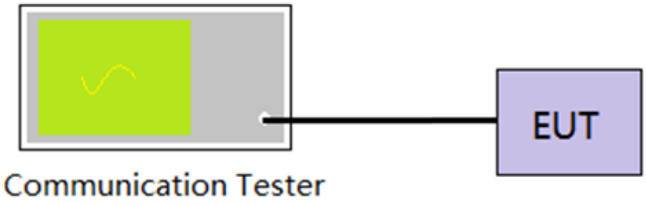

TEST PROCEDURE

1. The EUT output port was connected to communication tester.
2. Set EUT at maximum power through communication tester.
3. Select lowest, middle, and highest channels for each band and different modulation.
4. Measure the maximum burst average power.

TEST MODE:

Please refer to the clause 3.3

TEST RESULTS

☒ **Passed** ☐ **Not Applicable**

Refer to appendix A on the section 8 appendix report

5.2. Peak-to-Average Ratio

LIMIT

13dB

TEST CONFIGURATION

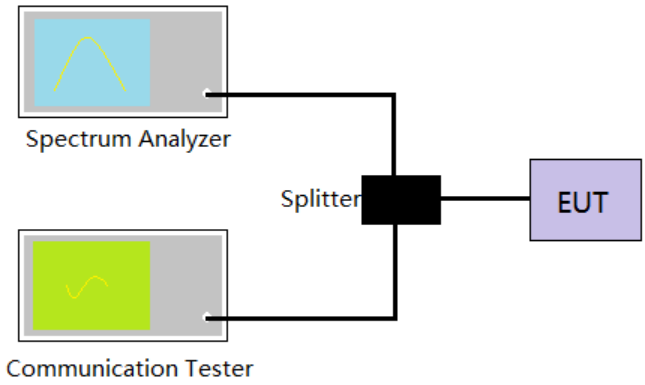

TEST PROCEDURE

1. The EUT was connected to the spectrum analyzer and communication tester via a power splitter
2. Set EUT in maximum power output.
3. Center Frequency = Carrier frequency, RBW > Emission bandwidth of signal
4. The signal analyzer was set to collect one million samples to generate the CCDF curve
5. The measurement interval was set depending on the type of signal analyzed.
   i. For continuous signals (>98% duty cycle), the measurement interval was set to 1ms.
   ii. For bursttransmissions, the spectrum analyzer is set to use an internal " RF Burst" trigger that issynced with an incoming pulse and the measurement interval is set to less than the durationof the " on time" of one burst to ensure that energy is only captured during a time in whichthetransmitter is operating at maximum power
6. Record the maximum PAPR level associated with a probability of 0.1%.

TEST MODE:

Please refer to the clause 3.3

TEST RESULTS

☒ **Passed** ☐ **Not Applicable**

Refer to appendix B on the section 8 appendix report

5.3. 99% Occupied Bandwidth & 26 dB Bandwidth

LIMIT

N/A

TEST CONFIGURATION

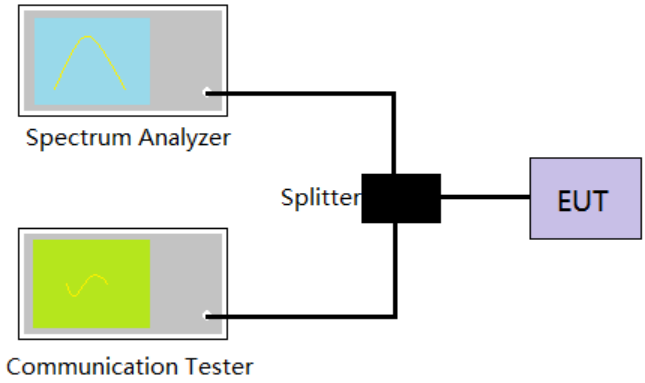

TEST PROCEDURE

1. The EUT was connected to the spectrum analyzer and communication tester via a power splitter
2. Set EUT in maximum power output.
3. Spectrum analyzer setting as follow:

   Center Frequency= Carrier frequency, RBW=1% to 5% of the anticipated OBW, VBW= 3 * RBW, Detector=Peak,

   Trace maximum hold.
4. Record the value of 99% Occupied bandwidth and 26dB bandwidth.

TEST MODE:

Please refer to the clause 3.3

TEST RESULTS

☒ **Passed** ☐ **Not Applicable**

Refer to appendix C on the section 8 appendix report

5.4. Band Edge

LIMIT

Part 24.238 and Part 22.917 and Part 27.53 specify that the power of any emission outside of the authorized operating frequency ranges must be attenuated below the transmitting power (P) by a factor of at least 43 + 10 log(P) dB.

The specification that emissions shall be attenuated below the transmitter power (P) by at least 43 + 10 log (P) dB, translates in the relevant power range (1 to 0.001 W) to -13 dBm. At 1 W the specified minimum attenuation becomes 43 dB and relative to a 30 dBm (1 W) carrier becomes a limit of -13 dBm. At 0.001 W (0 dBm) the minimum attenuation is 13 dB, which again yields a limit of -13 dBm. In this way a translation of the specification from relative to absolute terms is carried out.

LTE Band 7

Part 27.53 m(4) For mobile digital stations, the attenuation factor shall be not less than 40 + 10 log (P) dB on all frequencies between the channel edge and 5 megahertz from the channel edge, 43 + 10 log (P) dB on all frequencies between 5 megahertz and X megahertz from the channel edge, and 55 + 10 log (P) dB on all frequencies more than X megahertz from the channel edge, where X is the greater of 6 megahertz or the actual emission bandwidth as defined in paragraph (m)(6) of this section.

TEST CONFIGURATION

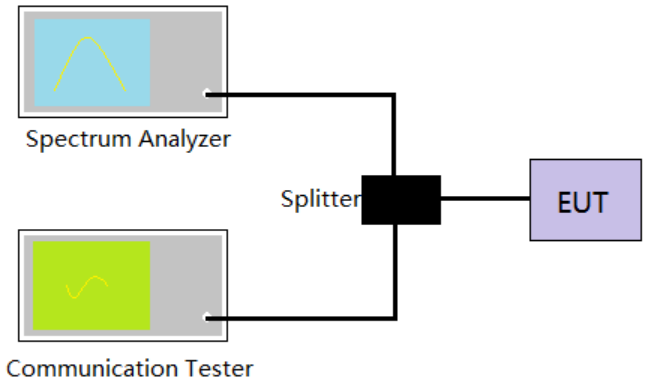

TEST PROCEDURE

1. The EUT was connected to the spectrum analyzer and communication tester via a power splitter
2. Set EUT in maximum power output.
3. The band edges of low and high channels were measured.
4. Spectrum analyzer setting as follow:

   RBW= no less than 1% of the OBW, VBW =3 * RBW, Sweep time= Auto
5. Record the test plot.

TEST MODE:

Please refer to the clause 3.3

TEST RESULTS

☒ **Passed** ☐ **Not Applicable**

Refer to appendix D on the section 8 appendix report

5.5. Conducted Spurious Emissions

LIMIT

Part 24.238 and Part 22.917 and Part 27.53 specify that the power of any emission outside of the authorized operating frequency ranges must be attenuated below the transmitting power (P) by a factor of at least 43 + 10 log(P) dB.

The specification that emissions shall be attenuated below the transmitter power (P) by at least 43 + 10 log (P) dB, translates in the relevant power range (1 to 0.001 W) to -13 dBm. At 1 W the specified minimum attenuation becomes 43 dB and relative to a 30 dBm (1 W) carrier becomes a limit of -13 dBm. At 0.001 W (0 dBm) the minimum attenuation is 13 dB, which again yields a limit of -13 dBm. In this way a translation of the specification from relative to absolute terms is carried out.

LTE Band 7

Part 27.53 m(4) For mobile digital stations, the attenuation factor shall be not less than 40 + 10 log (P) dB on all frequencies between the channel edge and 5 megahertz from the channel edge, 43 + 10 log (P) dB on all frequencies between 5 megahertz and X megahertz from the channel edge, and 55 + 10 log (P) dB on all frequencies more than X megahertz from the channel edge, where X is the greater of 6 megahertz or the actual emission bandwidth as defined in paragraph (m)(6) of this section. In addition, the attenuation factor shall not be less that 43 + 10 log (P) dB on all frequencies between 2490.5 MHz and 2496 MHz and 55 + 10 log (P) dB at or below 2490.5 MHz. Mobile Satellite Service licensees operating on frequencies below 2495 MHz may also submit a documented interference complaint against BRS licensees operating on channel BRS Channel 1 on the same terms and conditions as adjacent channel BRS or EBS licensees. Limit <-25 dBm

TEST CONFIGURATION

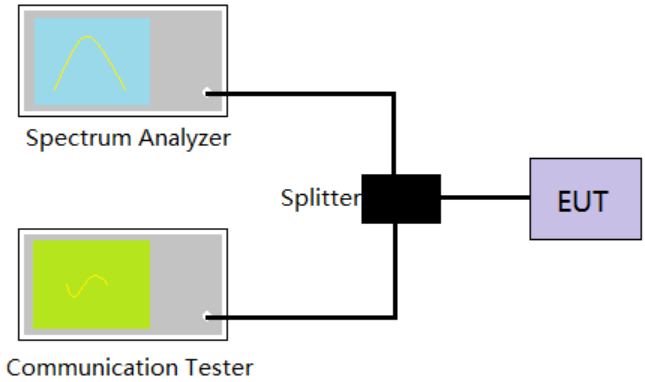

TEST PROCEDURE

1. The EUT was connected to the spectrum analyzer and communication tester via a power splitter
2. Set EUT in maximum power output.
3. Spectrum analyzer setting as follow:

   Below 1GHz, RBW=100KHz, VBW = 300KHz, Detector=Peak, Sweep time= Auto

   Above 1GHz, RBW=1MHz, VBW=3MHz, Detector=Peak, Sweep time= Auto

   Scan frequency range up to 10th harmonic.
4. Record the test plot.

TEST MODE:

Please refer to the clause 3.3

TEST RESULTS

☒ **Passed** ☐ **Not Applicable**

Refer to appendix E on the section 8 appendix report

5.6. Frequency stability VS Temperature measurement

LIMIT

2.5ppm

TEST CONFIGURATION

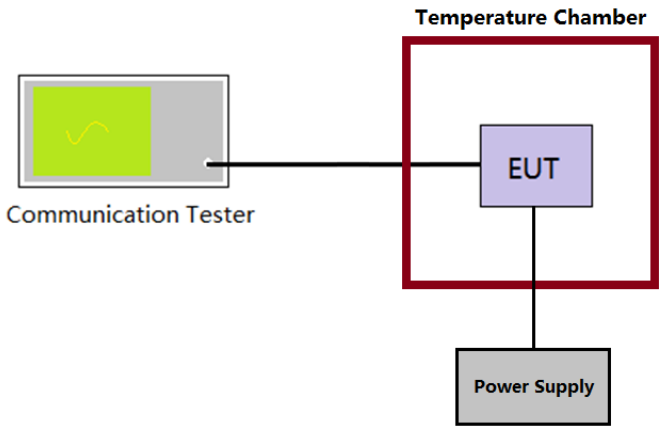

TEST PROCEDURE

1. The equipment under test was connected to an external DC power supply and input rated voltage.
2. The EUT output port was connected to communication tester.
3. The EUT was placed inside the temperature chamber.
4. Turn EUT off and set the chamber temperature to –30°C. After the temperature stabilized for approximately 30 minutes recorded the frequency.
5. Repeat step 4 measure with 10°C increased per stage until the highest temperature of +50°C reached.

TEST MODE:

Please refer to the clause 3.3

TEST RESULTS

☒ **Passed** ☐ **Not Applicable**

Refer to appendix F on the section 8 appendix report

5.7. Frequency stability VS Voltage measurement

LIMIT

2.5ppm

TEST CONFIGURATION

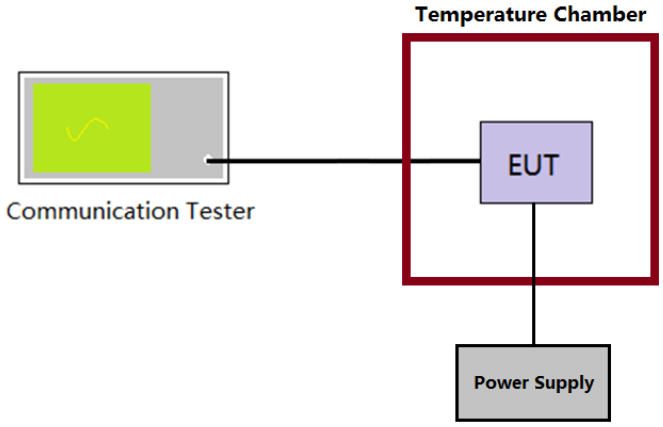

TEST PROCEDURE

1. The equipment under test was connected to an external DC power supply and input rated voltage.
2. The EUT output port was connected to communication tester.
3. The EUT was placed inside the temperature chamber at 25°C
4. The power supply voltage to the EUT was varied ±15% of the nominal value measured at the input to the EUT
5. Record the maximum frequency change.

TEST MODE:

Please refer to the clause 3.3

TEST RESULTS

☒ **Passed** ☐ **Not Applicable**

Refer to appendix F on the section 8 appendix report

5.8. ERP and EIRP

LIMIT

LTE Band 7: 2W(33dBm) EIRP

LTE Band 4: 1W(30dBm) EIRP

LTE Band 17: 3W(34.77dBm) ERP

TEST CONFIGURATION

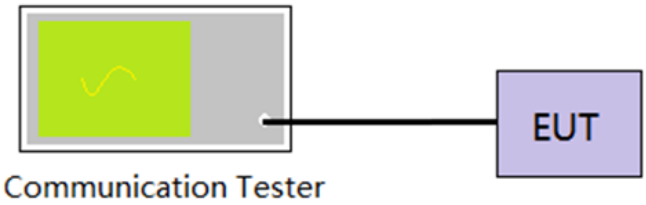

TEST PROCEDURE

1. The EUT output port was connected to communication tester.
2. Set EUT at maximum power through communication tester.
3. Select lowest, middle, and highest channels for each band and different modulation.
4. Measure the maximum burst average power.
5. ERP=Conducted power+Gain(dBd), EIRP=Conducted power+Gain(dBi), ERP=EIRP-2.15

TEST MODE:

Please refer to the clause 3.3

TEST RESULTS

☒ **Passed** ☐ **Not Applicable**

Refer to appendix G on the section 8 appendix report

5.9. Radiated Spurious Emission

LIMIT

LTE Band 4/5/17: -13dBm;
LTE Band 7: -25dBm

TEST CONFIGURATION

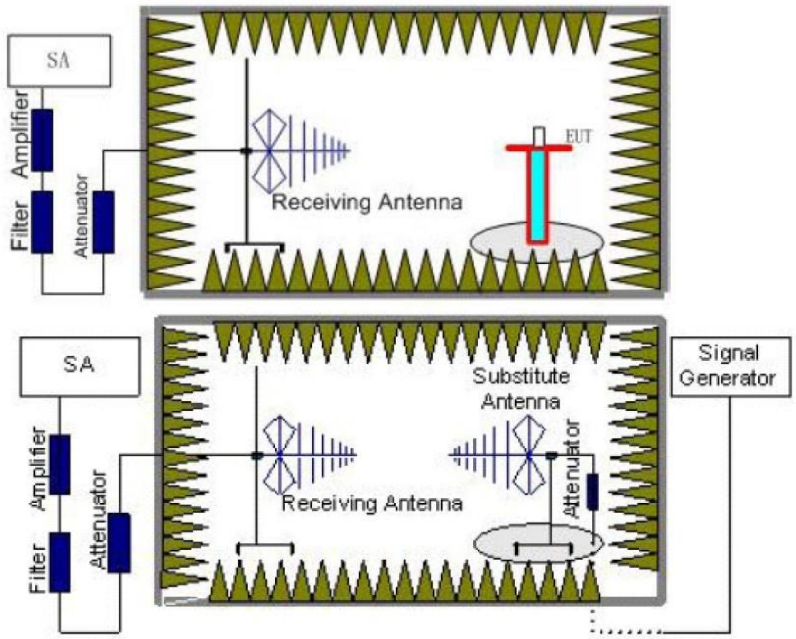

TEST PROCEDURE

1. Place the EUT in the center of the turntable.
   a) For radiated emissions measurements performed at frequencies less than or equal to 1 GHz, the EUT shall be placed on a RF-transparent table at a nominal height of 80 cm above the reference ground plane
   b) For radiated measurements performed at frequencies above 1 GHz, the EUT shall be placed on an RF transparent table at a nominal height of 1.5 m above the ground plane.
2. Unless the EUT uses an integral antenna, the EUT shall be terminated with a non-radiating transmitter load. In cases where the EUT uses an adjustable antenna, the antenna shall be adjusted through typical positions and lengths to maximize emissions levels.
3. The EUT shall be tested while operating on the frequency per manufacturer specification. Set the transmitter to operate in continuous transmit mode.
4. Receiver or Spectrum set as follow:

   Below 1GHz, RBW=100kHz, VBW=300kHz, Detector=Peak, Sweep time=Auto

   Above 1GHz, RBW=1MHz, VBW=3MHz, Detector=Peck, Sweep time=Auto
5. Each emission under consideration shall be evaluated:
   a) Raise and lower the measurement antenna from 1 m to 4 m, as necessary to enable detection of the maximum emission amplitude relative to measurement antenna height.
   b) Rotate the EUT through 360° to determine the maximum emission level relative to the axial position.
   c) Return the turntable to the azimuth where the highest emission amplitude level was observed.
   d) Vary the measurement antenna height again through 1 m to 4 m again to find the height associated with the maximum emission amplitude.
   e) Record the measured emission amplitude level and frequency

6. Repeat step 5 for each emission frequency with the measurement antenna oriented in both the horizontal and vertical polarizations to determine the orientation that gives the maximum emissions amplitude.
7. Set-up the substitution measurement with the reference point of the substitution antenna located as near as possible to where the center of the EUT radiating element was located during the initial EUT measurement.
8. Maintain the previous measurement instrument settings and test set-up, with the exception that the EUT is removed and replaced by the substitution antenna.
9. Connect a signal generator to the substitution antenna; locate the signal generator so as to minimize any potential influences on the measurement results. Set the signal generator to the frequency where emissions are detected, and set an output power level such that the radiated signal can be detected by the measurement instrument, with sufficient dynamic range relative to the noise floor.
10. For each emission that was detected and measured in the initial test
    a) Vary the measurement antenna height between 1 m to 4 m to maximize the received (measured) signal amplitude.
    b) Adjust the signal generator output power level until the amplitude detected by the measurement instrument equals the amplitude level of the emission previously measured directly in step 5 and step 6.
    c) Record the output power level of the signal generator when equivalence is achieved in step b).
11. Repeat step 8 through step 10 with the measurement antenna oriented in the opposite polarization.
12. Calculate the emission power in dBm referenced to a half-wave dipole using the following equation:

    Pe = Ps(dBm) − cable loss (dB) + antenna gain (dBd)

    where

    Pe = equivalent emission power in dBm

    Ps = source (signal generator) power in dBm

    NOTE—dBd refers to the measured antenna gain in decibels relative to a half-wave dipole.
13. Correct the antenna gain of the substitution antenna if necessary to reference the emission power to a half-wave dipole. When using measurement antennas with the gain specified in dBi, the equivalent dipole-referenced gain can be determined from:

    gain (dBd) = gain (dBi) − 2.15 dB.

    If necessary, the antenna gain can be calculated from calibrated antenna factor information
14. Provide the complete measurement results as a part of the test report.

TEST MODE:

Please refer to the clause 3.3

TEST RESULTS

☒ **Passed** ☐ **Not Applicable**

Note: only show the worse case for QPSK modulation.

1720 MHZ	Polarization: Horizontal

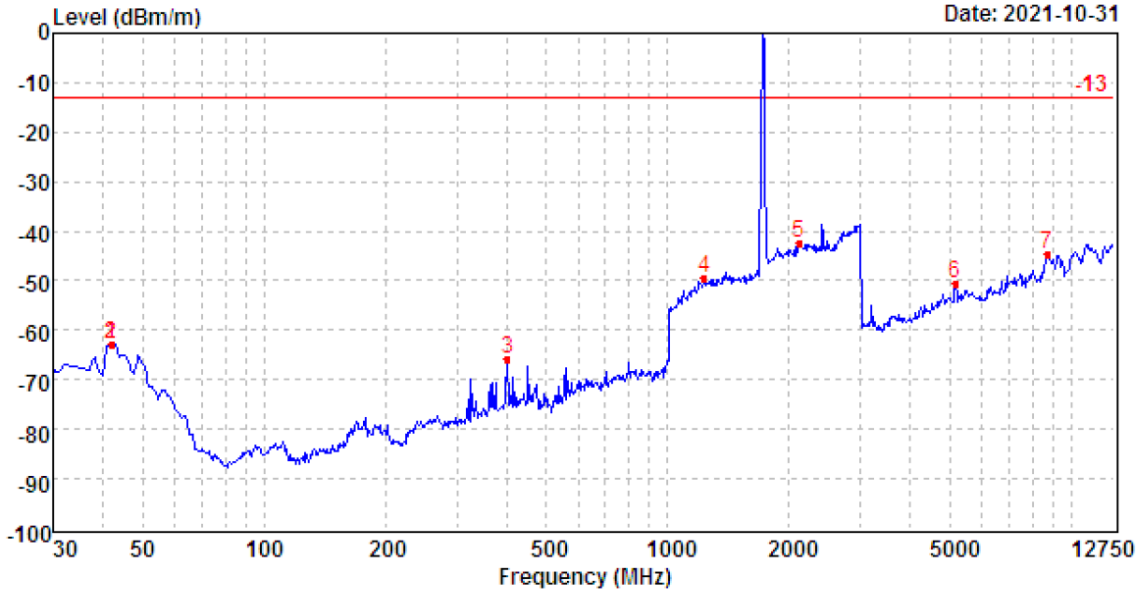

Mark	Frequency MHz	Reading dBm	Antenna dB	Cable dB	Preamp dB	Level dBm	Limit dBm	Over limit	Remark
2	41.75	-65.68	26.96	6.95	30.91	-62.68	-13.00	-49.68	Peak
3	400.56	-70.45	25.43	9.19	30.09	-65.92	-13.00	-52.92	Peak
4	1229.42	-68.99	36.80	11.77	28.87	-49.29	-13.00	-36.29	Peak
5	2113.10	-68.11	40.18	13.81	28.26	-42.38	-13.00	-29.38	Peak
6	5158.11	-69.00	44.03	8.96	34.69	-50.70	-13.00	-37.70	Peak
7	8706.88	-74.90	48.16	11.98	29.97	-44.73	-13.00	-31.73	Peak

1720 MHZ	Polarization: Vertical

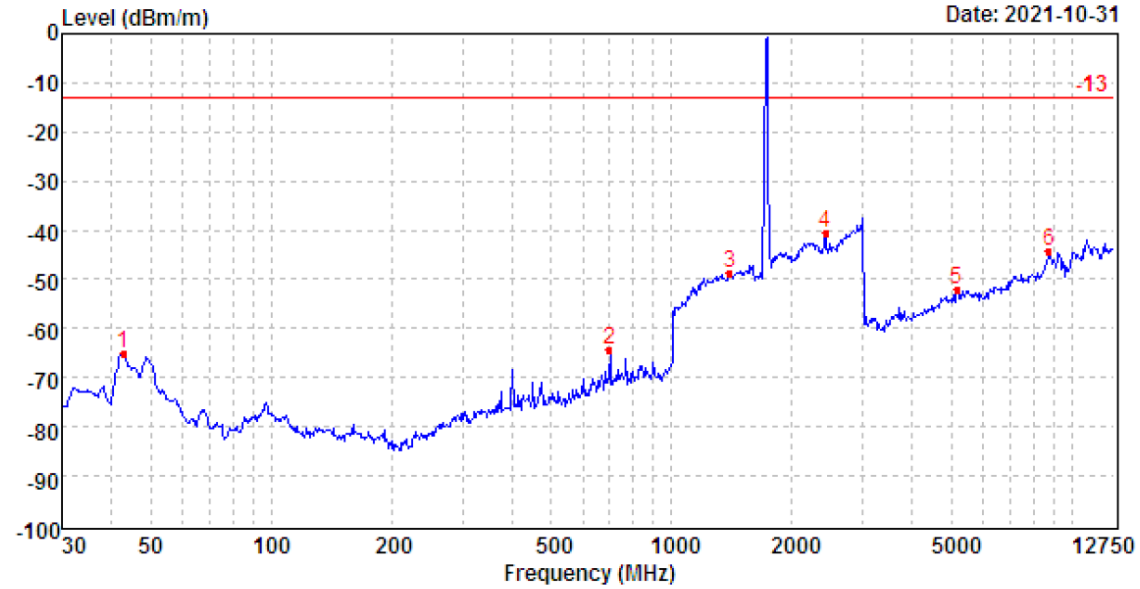

Mark	Frequency MHz	Reading dBm	Antenna dB	Cable dB	Preamp dB	Level dBm	Limit dBm	Over limit	Remark
1	42.79	-62.44	21.39	6.96	30.90	-64.99	-13.00	-51.99	Peak
2	700.64	-73.53	28.49	10.26	29.65	-64.43	-13.00	-51.43	Peak
3	1399.58	-69.68	37.76	12.17	28.91	-48.66	-13.00	-35.66	Peak
4	2426.82	-67.78	39.30	14.93	27.09	-40.64	-13.00	-27.64	Peak
5	5150.64	-70.22	44.06	8.96	34.71	-51.91	-13.00	-38.91	Peak
6	8770.25	-75.16	49.28	11.95	30.39	-44.32	-13.00	-31.32	Peak

1732.5 MHZ	Polarization: Horizontal

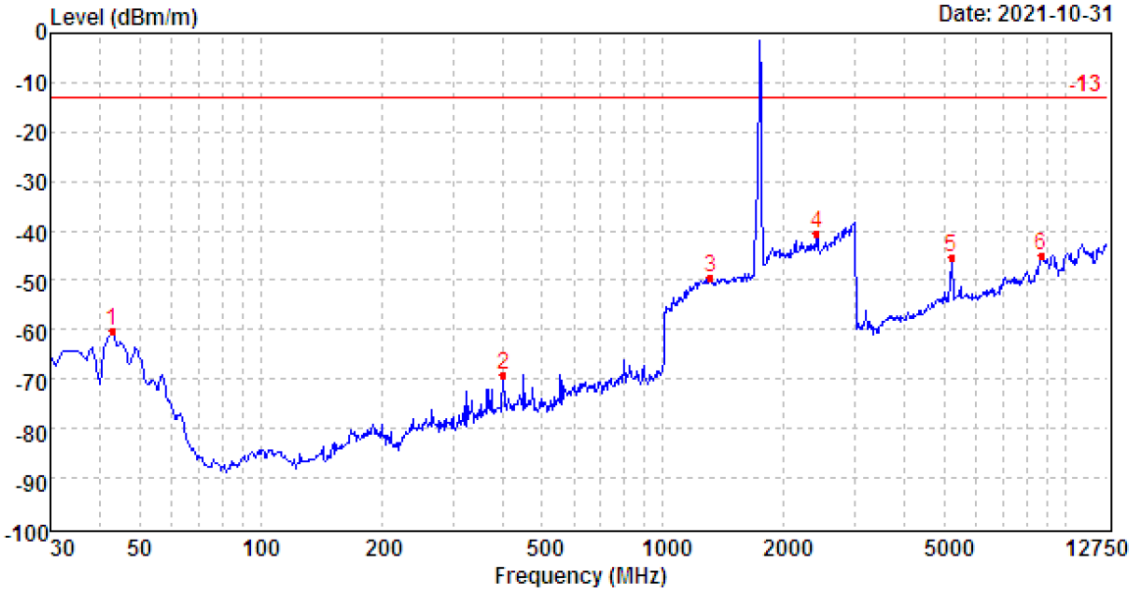

Mark	Frequency MHz	Reading dBm	Antenna dB	Cable dB	Preamp dB	Level dBm	Limit dBm	Over limit	Remark
1	42.79	-62.61	26.49	6.96	30.90	-60.06	-13.00	-47.06	Peak
2	400.56	-73.79	25.43	9.19	30.09	-69.26	-13.00	-56.26	Peak
3	1310.30	-69.46	36.98	11.96	28.97	-49.49	-13.00	-36.49	Peak
4	2416.18	-68.04	39.73	14.88	27.18	-40.61	-13.00	-27.61	Peak
5	5210.74	-63.82	43.96	9.01	34.43	-45.28	-13.00	-32.28	Peak
6	8706.88	-75.04	48.16	11.98	29.97	-44.87	-13.00	-31.87	Peak

1732.5 MHZ	Polarization: Vertical

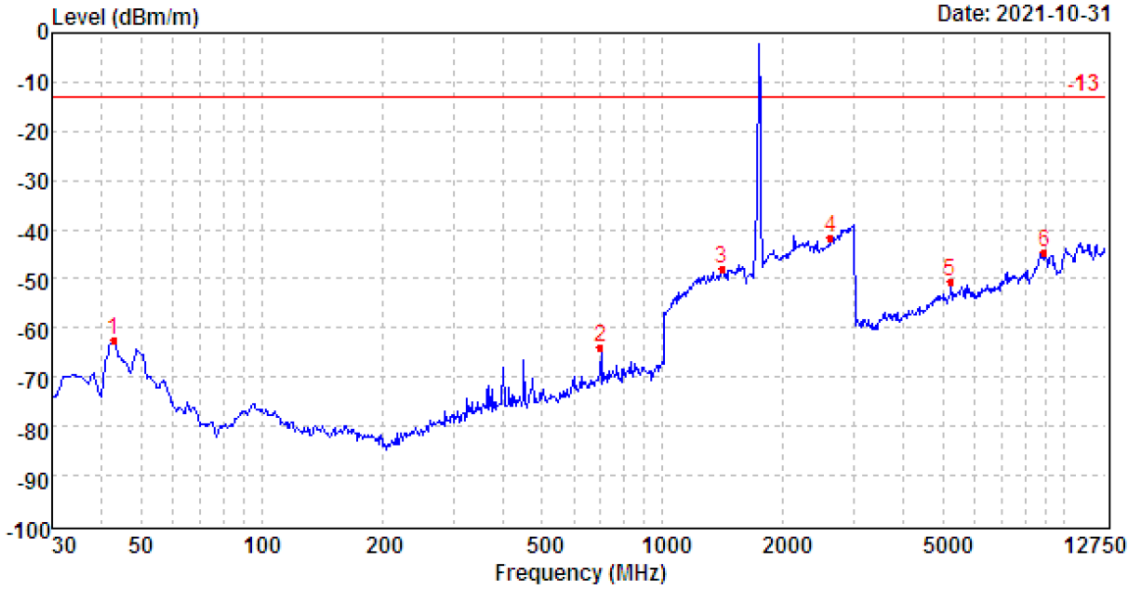

Mark	Frequency MHz	Reading dBm	Antenna dB	Cable dB	Preamp dB	Level dBm	Limit dBm	Over limit	Remark
1	42.79	-59.88	21.39	6.96	30.90	-62.43	-13.00	-49.43	Peak
2	700.64	-73.04	28.49	10.26	29.65	-63.94	-13.00	-50.94	Peak
3	1405.75	-68.97	37.76	12.19	28.90	-47.92	-13.00	-34.92	Peak
4	2629.46	-71.41	39.38	15.79	25.28	-41.52	-13.00	-28.52	Peak
5	5210.74	-68.90	43.93	9.01	34.43	-50.39	-13.00	-37.39	Peak
6	8963.12	-74.69	48.79	11.88	30.61	-44.63	-13.00	-31.63	Peak

1745MHZ	Polarization: Horizontal

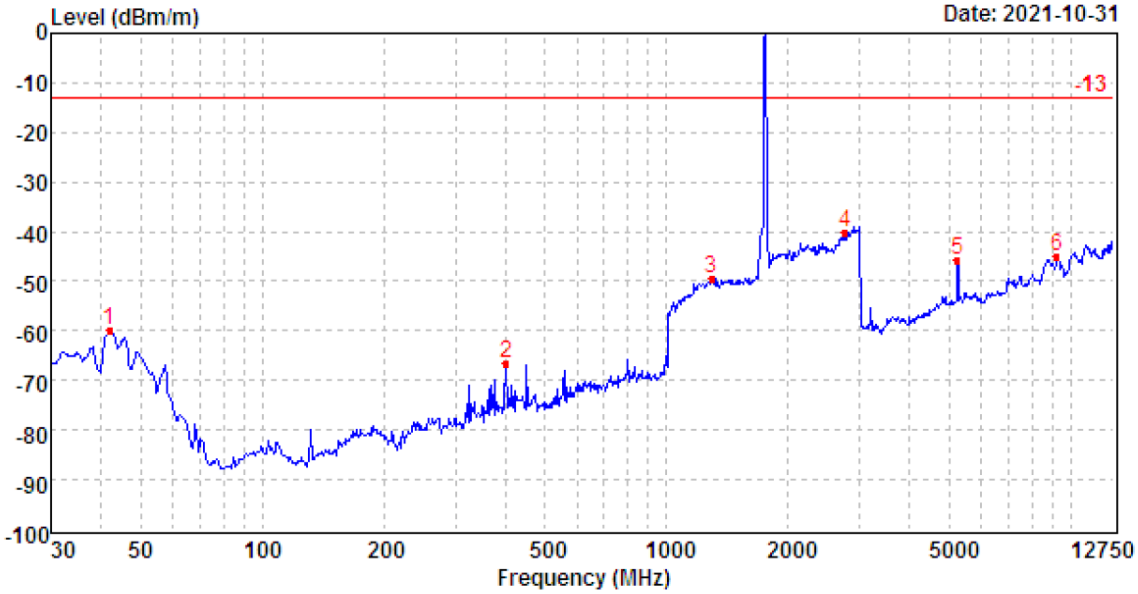

Mark	Frequency MHz	Reading dBm	Antenna dB	Cable dB	Preamp dB	Level dBm	Limit dBm	Over limit	Remark
1	41.75	-62.90	26.96	6.95	30.91	-59.90	-13.00	-46.90	Peak
2	400.56	-71.18	25.43	9.19	30.09	-66.65	-13.00	-53.65	Peak
3	1294.56	-69.50	36.94	11.92	28.94	-49.58	-13.00	-36.58	Peak
4	2765.76	-72.33	40.40	16.25	24.38	-40.06	-13.00	-27.06	Peak
5	5233.46	-64.43	43.97	9.12	34.35	-45.69	-13.00	-32.69	Peak
6	9253.71	-74.85	49.45	11.66	31.15	-44.89	-13.00	-31.89	Peak

1745MHZ	Polarization: Vertical

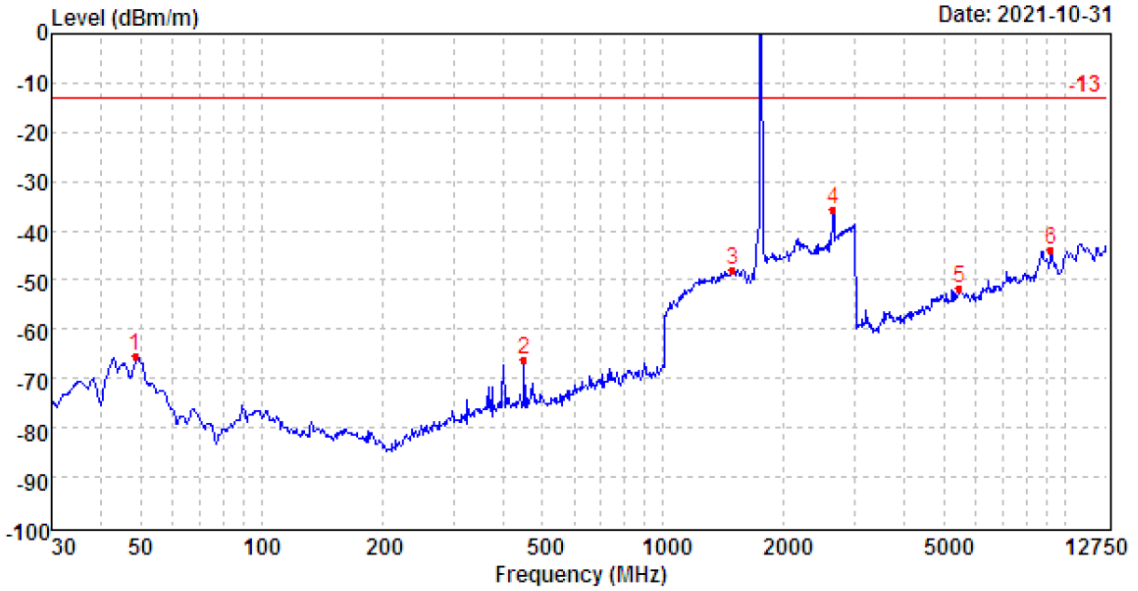

Mark	Frequency MHz	Reading dBm	Antenna dB	Cable dB	Preamp dB	Level dBm	Limit dBm	Over limit	Remark
1	48.57	-63.46	21.94	7.03	30.86	-65.35	-13.00	-52.35	Peak
2	449.85	-70.46	25.28	9.37	30.18	-65.99	-13.00	-52.99	Peak
3	1490.03	-69.38	37.76	12.39	28.67	-47.90	-13.00	-34.90	Peak
4	2652.67	-66.17	39.56	15.87	24.90	-35.64	-13.00	-22.64	Peak
5	5466.18	-72.52	44.04	9.35	32.53	-51.66	-13.00	-38.66	Peak
6	9253.71	-74.25	49.76	11.66	31.15	-43.98	-13.00	-30.98	Peak

2510MHZ	Polarization: Horizontal

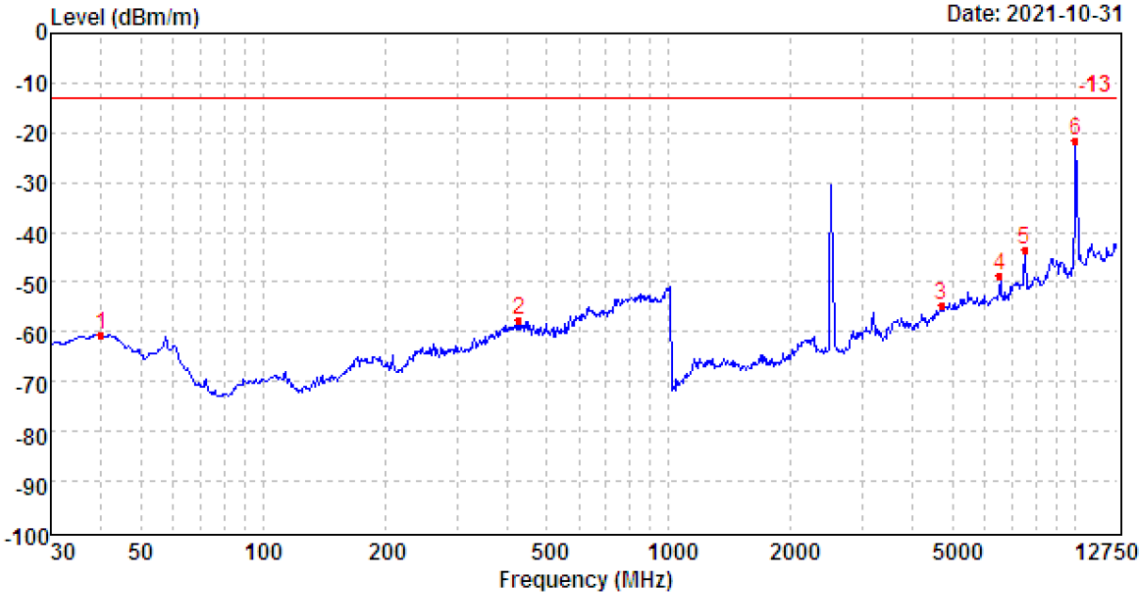

Mark	Frequency MHz	Reading dBm	Antenna dB	Cable dB	Preamp dB	Level dBm	Limit dBm	Over limit	Remark
1	39.89	-95.34	27.76	6.93	0.00	-60.65	-13.00	-47.65	Peak
2	428.24	-93.02	26.01	9.28	0.00	-57.73	-13.00	-44.73	Peak
3	4688.62	-71.90	43.55	8.20	34.63	-54.78	-13.00	-41.78	Peak
4	6527.71	-70.71	46.35	9.75	34.15	-48.76	-13.00	-35.76	Peak
5	7527.83	-68.43	47.96	10.49	33.69	-43.67	-13.00	-30.67	Peak
6	10062.31	-53.04	50.56	12.38	31.46	-21.56	-13.00	-8.56	Peak

2510 MHZ	Polarization: Vertical

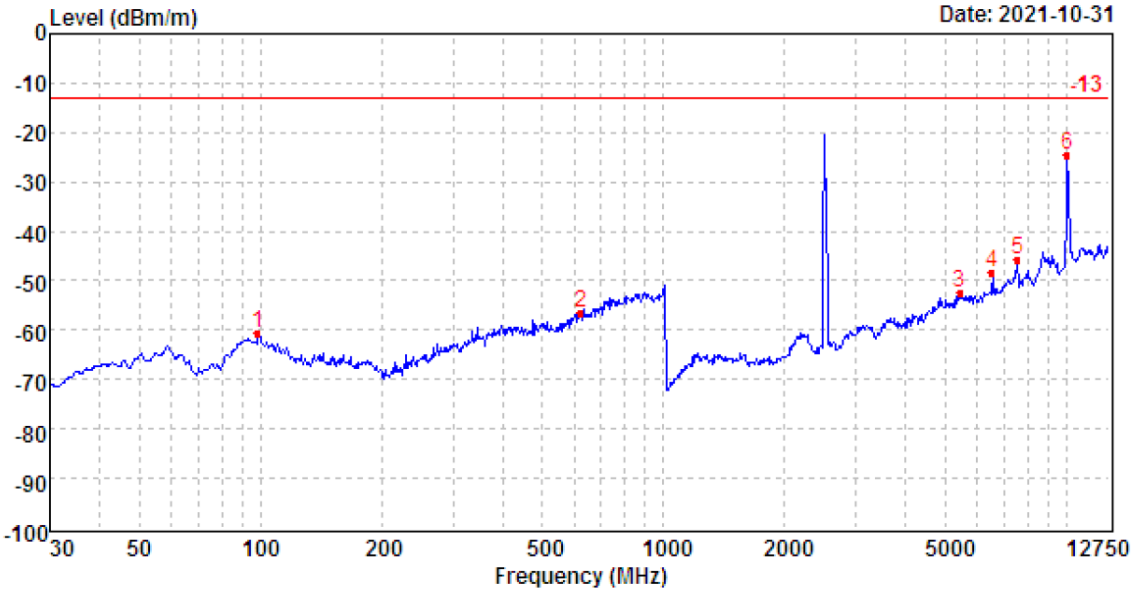

Mark	Frequency MHz	Reading dBm	Antenna dB	Cable dB	Preamp dB	Level dBm	Limit dBm	Over limit	Remark
1	98.47	-94.00	25.77	7.50	0.00	-60.73	-13.00	-47.73	Peak
2	623.87	-94.38	27.93	9.99	0.00	-56.46	-13.00	-43.46	Peak
3	5448.41	-72.92	44.06	9.35	32.78	-52.29	-13.00	-39.29	Peak
4	6527.71	-70.85	46.82	9.75	34.15	-48.43	-13.00	-35.43	Peak
5	7547.01	-70.77	48.34	10.45	33.69	-45.67	-13.00	-32.67	Peak
6	10062.31	-56.23	50.73	12.38	31.46	-24.58	-13.00	-11.58	Peak

2535 MHZ	Polarization: Horizontal

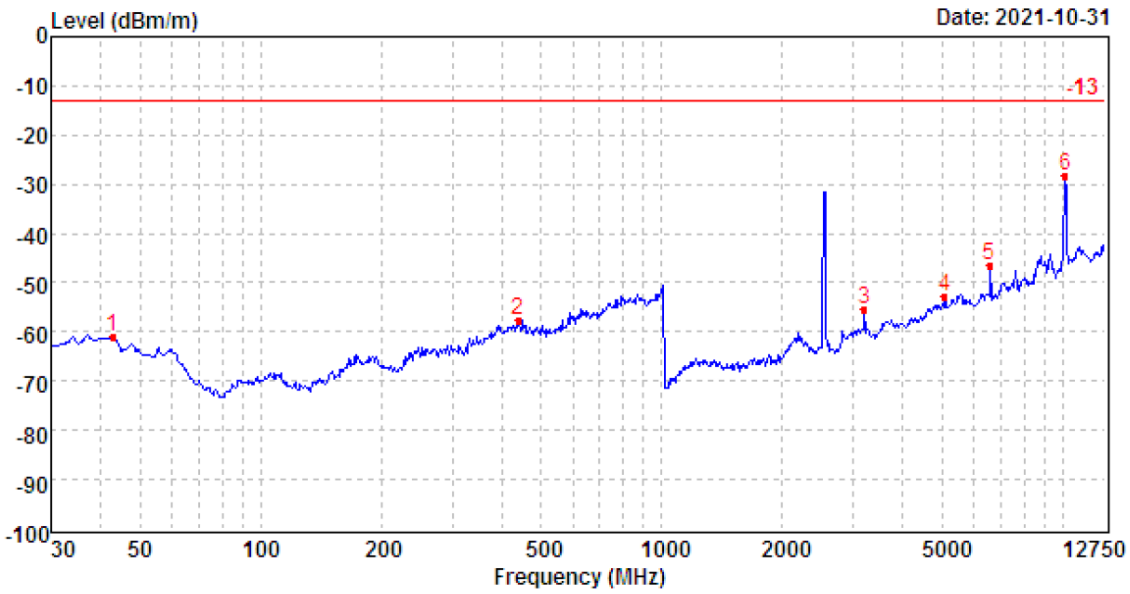

Mark	Frequency MHz	Reading dBm	Antenna dB	Cable dB	Preamp dB	Level dBm	Limit dBm	Over limit	Remark
1	42.79	-94.26	26.49	6.96	0.00	-60.81	-13.00	-47.81	Peak
2	438.91	-92.82	26.04	9.32	0.00	-57.46	-13.00	-44.46	Peak
3	3200.50	-66.29	41.37	6.46	37.11	-55.57	-13.00	-42.57	Peak
4	5086.52	-71.08	44.18	8.92	34.83	-52.81	-13.00	-39.81	Peak
5	6561.03	-68.67	46.41	9.77	34.11	-46.60	-13.00	-33.60	Peak
6	10139.45	-59.74	50.76	12.40	31.63	-28.21	-13.00	-15.21	Peak

2535 MHZ	Polarization: Vertical

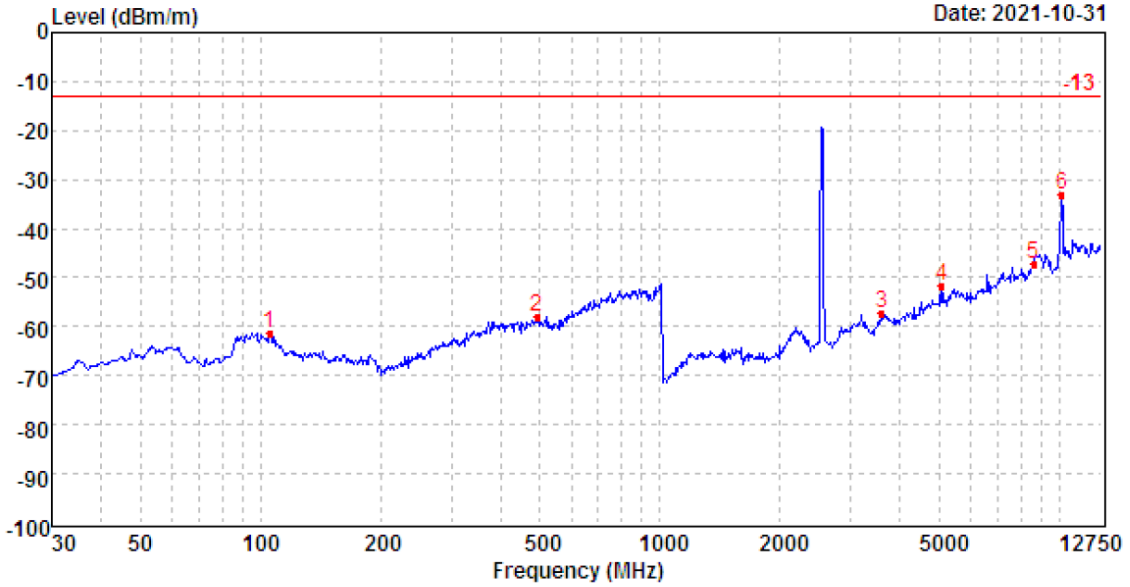

Mark	Frequency MHz	Reading dBm	Antenna dB	Cable dB	Preamp dB	Level dBm	Limit dBm	Over limit	Remark
1	105.28	-93.77	25.04	7.56	0.00	-61.17	-13.00	-48.17	Peak
2	492.92	-93.62	26.08	9.53	0.00	-58.01	-13.00	-45.01	Peak
3	3588.94	-69.52	42.46	6.90	37.00	-57.16	-13.00	-44.16	Peak
4	5086.52	-70.19	44.25	8.92	34.83	-51.85	-13.00	-38.85	Peak
5	8615.13	-75.26	47.89	11.06	30.88	-47.19	-13.00	-34.19	Peak
6	10139.45	-64.93	51.02	12.40	31.63	-33.14	-13.00	-20.14	Peak

2560MHZ	Polarization: Horizontal

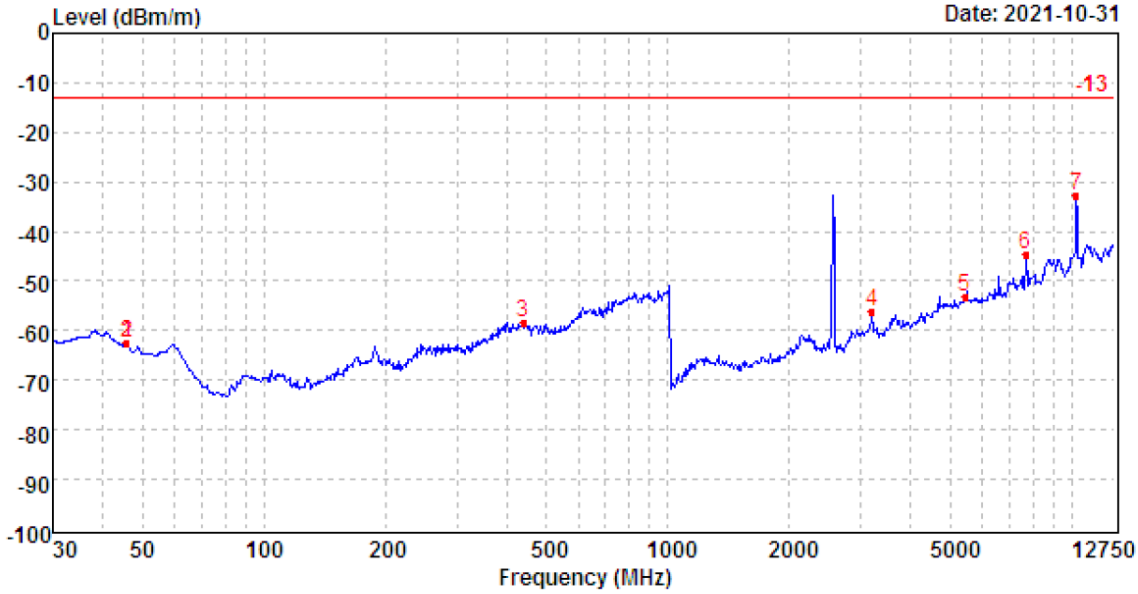

Mark	Frequency MHz	Reading dBm	Antenna dB	Cable dB	Preamp dB	Level dBm	Limit dBm	Over limit	Remark
2	45.75	-94.82	25.22	7.00	0.00	-62.60	-13.00	-49.60	Peak
3	438.91	-93.79	26.04	9.32	0.00	-58.43	-13.00	-45.43	Peak
4	3200.50	-66.84	41.37	6.46	37.11	-56.12	-13.00	-43.12	Peak
5	5434.56	-73.69	44.02	9.36	33.00	-53.31	-13.00	-40.31	Peak
6	7682.70	-69.29	47.73	10.53	33.55	-44.58	-13.00	-31.58	Peak
7	10243.22	-64.00	51.03	12.42	32.18	-32.73	-13.00	-19.73	Peak

2560 MHZ	Polarization: Vertical

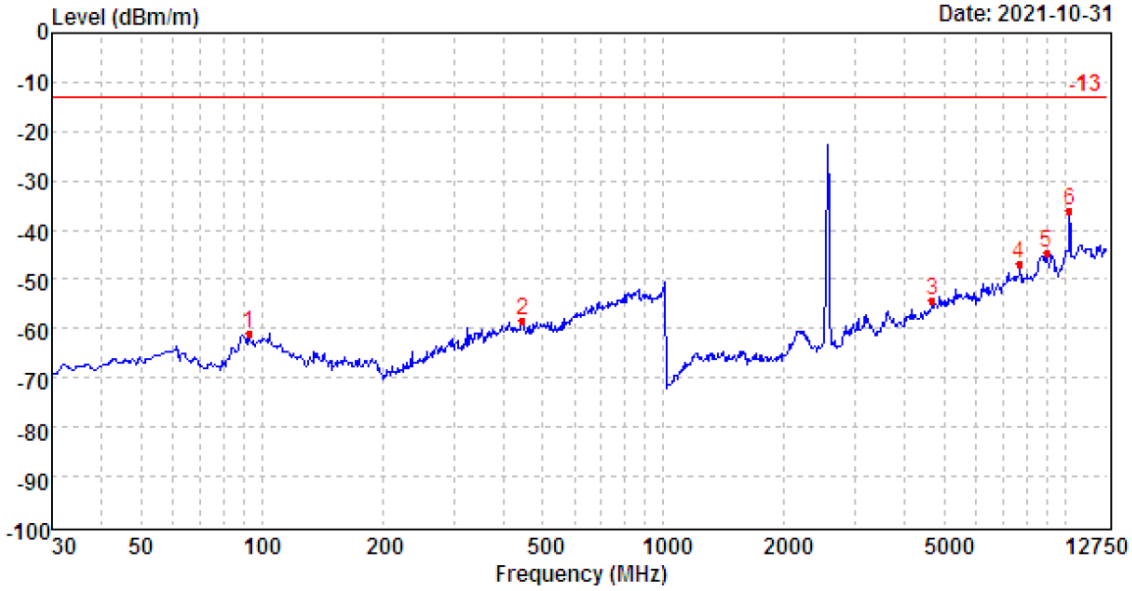

Mark	Frequency MHz	Reading dBm	Antenna dB	Cable dB	Preamp dB	Level dBm	Limit dBm	Over limit	Remark
1	92.76	-94.28	25.85	7.45	0.00	-60.98	-13.00	-47.98	Peak
2	445.13	-93.32	25.44	9.35	0.00	-58.53	-13.00	-45.53	Peak
3	4664.81	-71.40	43.54	8.18	34.77	-54.45	-13.00	-41.45	Peak
4	7682.70	-72.04	48.38	10.53	33.55	-46.68	-13.00	-33.68	Peak
5	8973.25	-74.87	48.74	11.87	30.49	-44.75	-13.00	-31.75	Peak
6	10243.22	-67.65	51.40	12.42	32.18	-36.01	-13.00	-23.01	Peak

710 MHZ	Polarization: Horizontal

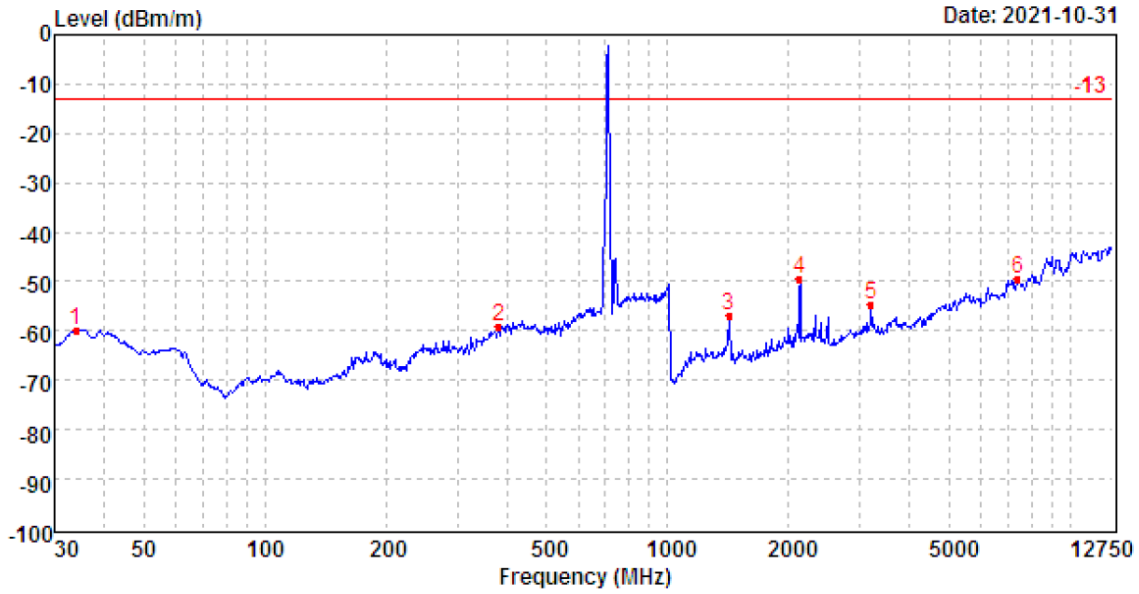

Mark	Frequency MHz	Reading dBm	Antenna dB	Cable dB	Preamp dB	Level dBm	Limit dBm	Over limit	Remark
1	33.93	-93.54	26.84	6.86	0.00	-59.84	-13.00	-46.84	Peak
2	381.32	-93.18	25.04	9.09	0.00	-59.05	-13.00	-46.05	Peak
3	1417.28	-61.38	37.05	4.20	36.64	-56.77	-13.00	-43.77	Peak
4	2129.79	-57.56	40.34	5.20	37.41	-49.43	-13.00	-36.43	Peak
5	3200.50	-65.19	41.37	6.46	37.11	-54.47	-13.00	-41.47	Peak
6	7413.73	-74.38	48.49	10.29	33.84	-49.44	-13.00	-36.44	Peak

710 MHZ	Polarization: Vertical

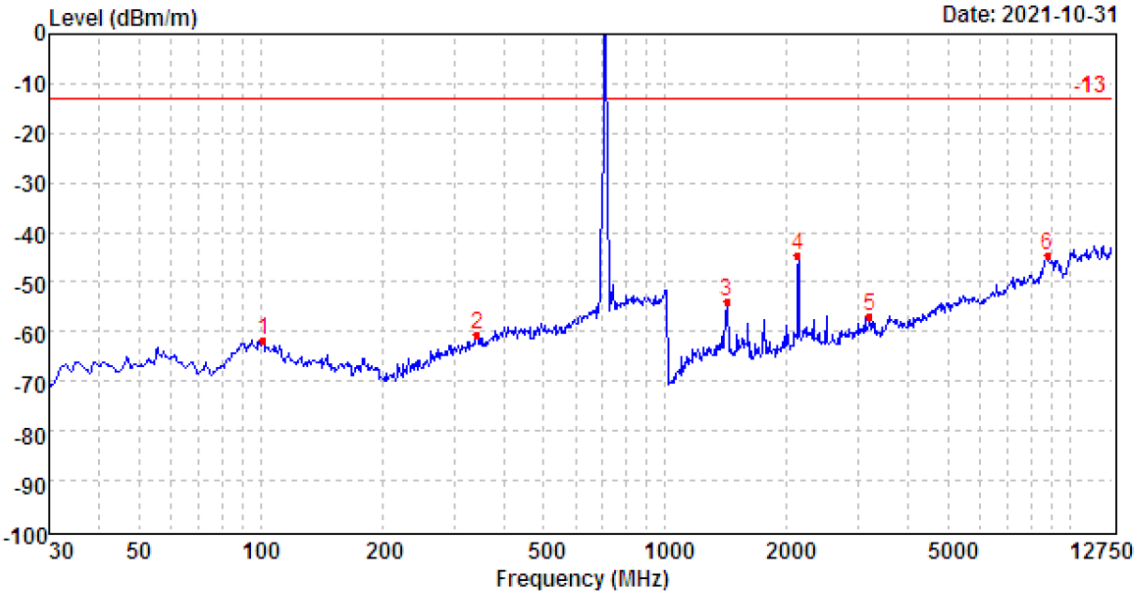

Mark	Frequency MHz	Reading dBm	Antenna dB	Cable dB	Preamp dB	Level dBm	Limit dBm	Over limit	Remark
1	101.64	-94.71	25.53	7.53	0.00	-61.65	-13.00	-48.65	Peak
2	343.14	-94.30	24.72	8.92	0.00	-60.66	-13.00	-47.66	Peak
3	1417.28	-59.22	37.76	4.20	36.64	-53.90	-13.00	-40.90	Peak
4	2129.79	-52.95	40.57	5.20	37.41	-44.59	-13.00	-31.59	Peak
5	3200.50	-67.62	41.48	6.46	37.11	-56.79	-13.00	-43.79	Peak
6	8792.37	-75.55	49.47	11.94	30.54	-44.68	-13.00	-31.68	Peak

711 MHZ	Polarization: Horizontal

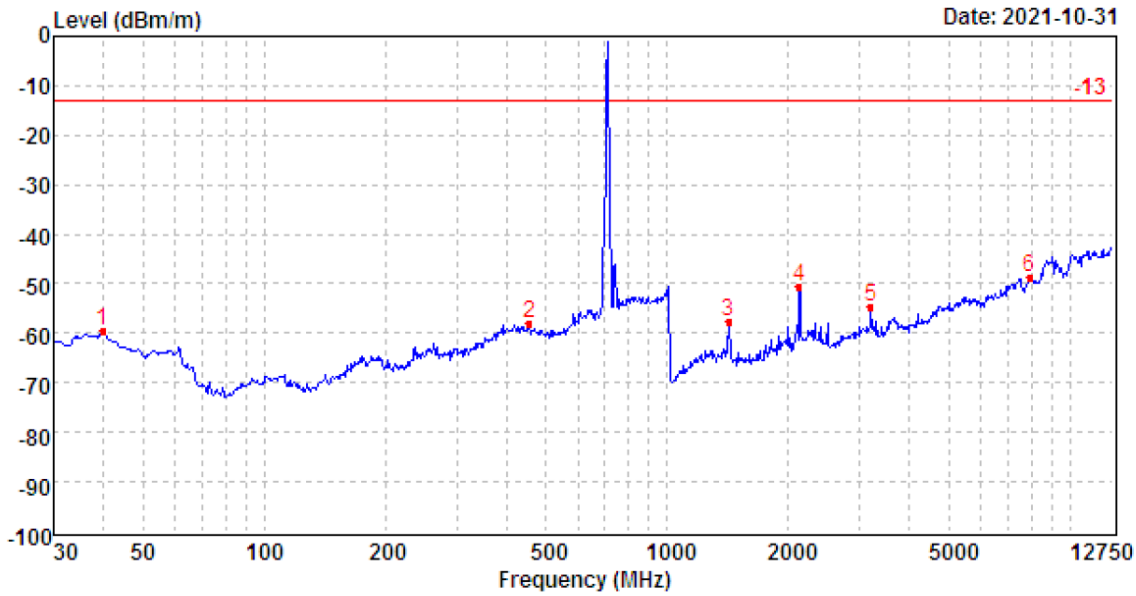

Mark	Frequency MHz	Reading dBm	Antenna dB	Cable dB	Preamp dB	Level dBm	Limit dBm	Over limit	Remark
1	39.75	-94.14	27.74	6.93	0.00	-59.47	-13.00	-46.47	Peak
2	454.62	-93.39	25.90	9.39	0.00	-58.10	-13.00	-45.10	Peak
3	1417.28	-62.08	37.05	4.20	36.64	-57.47	-13.00	-44.47	Peak
4	2124.37	-58.65	40.29	5.19	37.40	-50.57	-13.00	-37.57	Peak
5	3200.50	-65.21	41.37	6.46	37.11	-54.49	-13.00	-41.49	Peak
6	7921.00	-74.47	48.03	10.83	32.91	-48.52	-13.00	-35.52	Peak

711MHZ	Polarization: Vertical

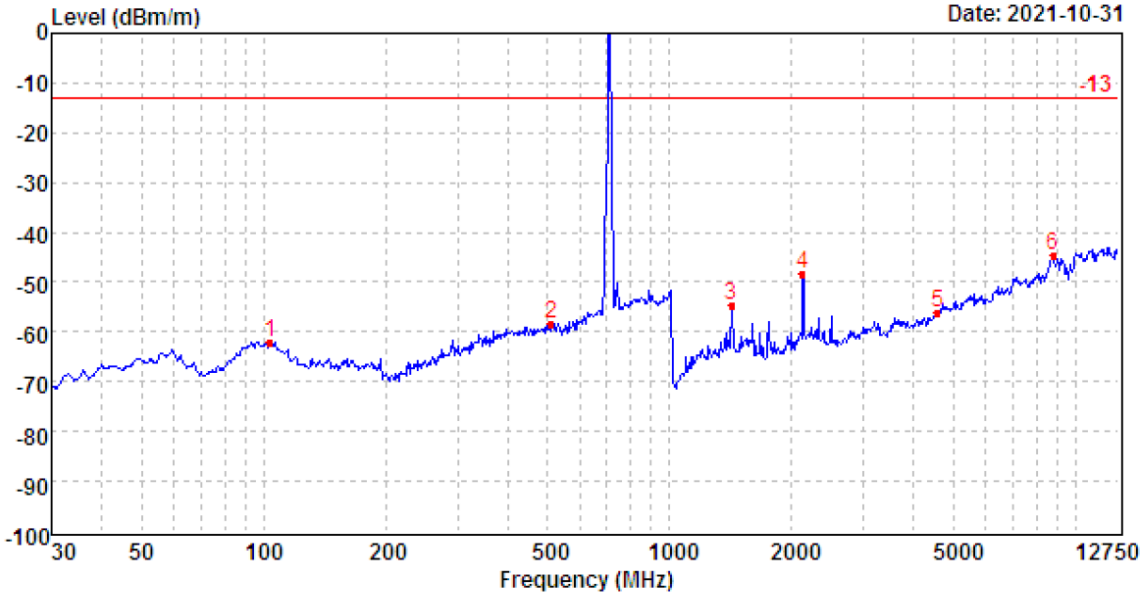

Mark	Frequency MHz	Reading dBm	Antenna dB	Cable dB	Preamp dB	Level dBm	Limit dBm	Over limit	Remark
1	103.44	-94.74	25.28	7.55	0.00	-61.91	-13.00	-48.91	Peak
2	510.56	-93.86	26.01	9.59	0.00	-58.26	-13.00	-45.26	Peak
3	1417.28	-59.81	37.76	4.20	36.64	-54.49	-13.00	-41.49	Peak
4	2124.37	-56.74	40.47	5.19	37.40	-48.48	-13.00	-35.48	Peak
5	4570.77	-72.37	43.43	8.07	35.40	-56.27	-13.00	-43.27	Peak
6	8792.37	-75.65	49.47	11.94	30.54	-44.78	-13.00	-31.78	Peak

709 MHZ	Polarization: Horizontal

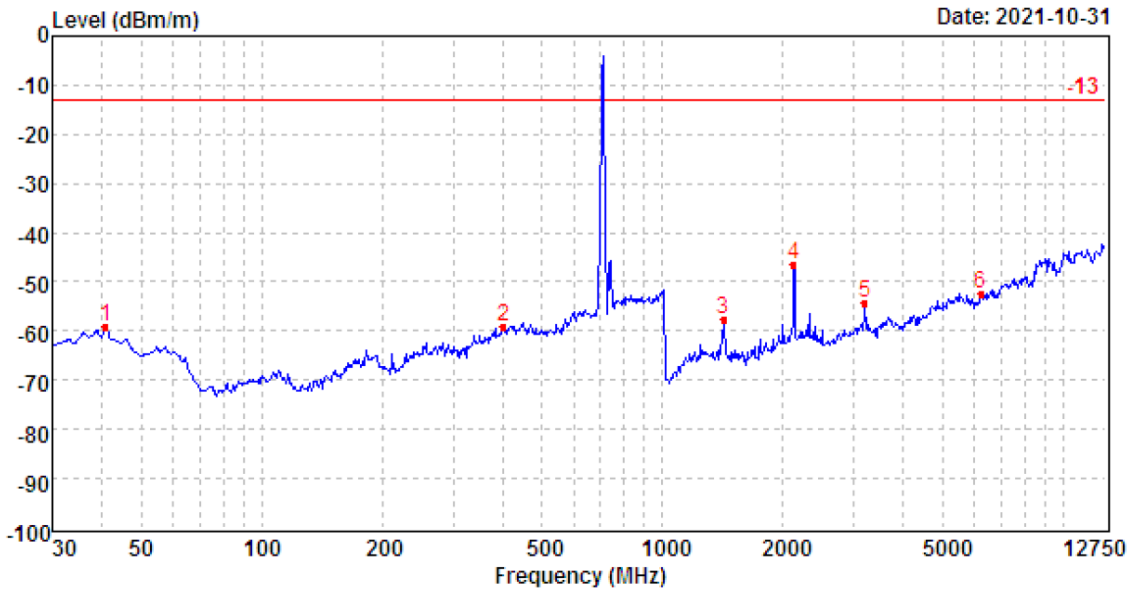

Mark	Frequency MHz	Reading dBm	Antenna dB	Cable dB	Preamp dB	Level dBm	Limit dBm	Over limit	Remark
1	40.74	-93.48	27.43	6.94	0.00	-59.11	-13.00	-46.11	Peak
2	400.56	-93.70	25.43	9.19	0.00	-59.08	-13.00	-46.08	Peak
3	1417.28	-62.23	37.05	4.20	36.64	-57.62	-13.00	-44.62	Peak
4	2129.79	-54.59	40.34	5.20	37.41	-46.46	-13.00	-33.46	Peak
5	3200.50	-65.09	41.37	6.46	37.11	-54.37	-13.00	-41.37	Peak
6	6235.36	-73.59	45.49	9.73	34.06	-52.43	-13.00	-39.43	Peak

709MHZ	Polarization: Vertical

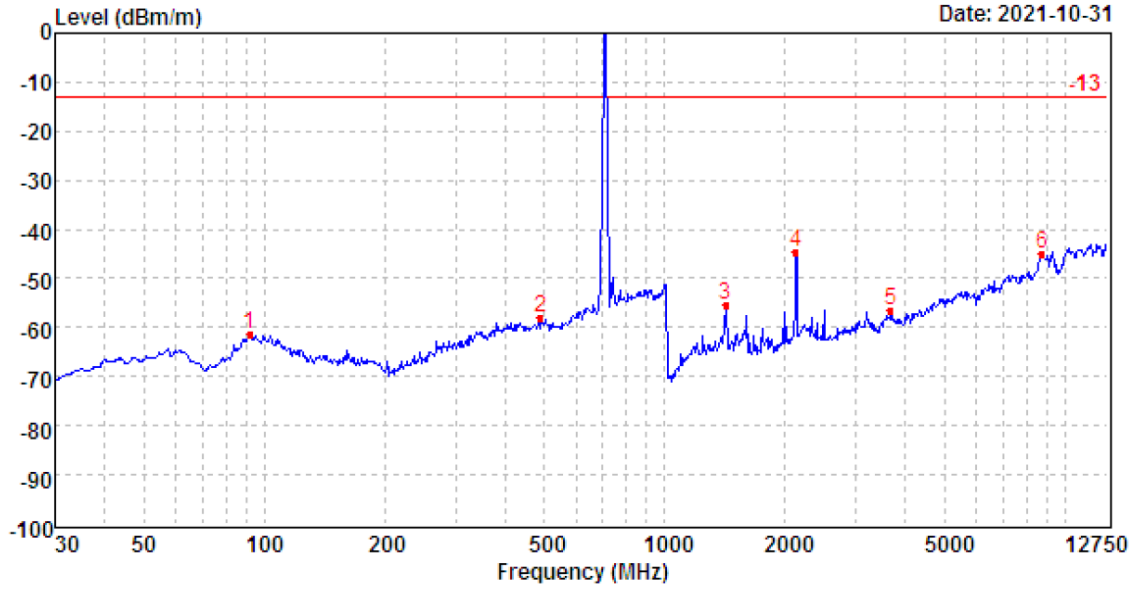

Mark	Frequency MHz	Reading dBm	Antenna dB	Cable dB	Preamp dB	Level dBm	Limit dBm	Over limit	Remark
1	91.78	-94.54	25.86	7.44	0.00	-61.24	-13.00	-48.24	Peak
2	489.46	-93.55	25.99	9.52	0.00	-58.04	-13.00	-45.04	Peak
3	1417.28	-60.86	37.76	4.20	36.64	-55.54	-13.00	-42.54	Peak
4	2129.79	-53.13	40.57	5.20	37.41	-44.77	-13.00	-31.77	Peak
5	3662.78	-68.87	42.43	6.98	37.11	-56.57	-13.00	-43.57	Peak
6	8747.72	-75.76	49.08	11.96	30.24	-44.96	-13.00	-31.96	Peak

6. TEST SETUP PHOTOS OF THE EUT

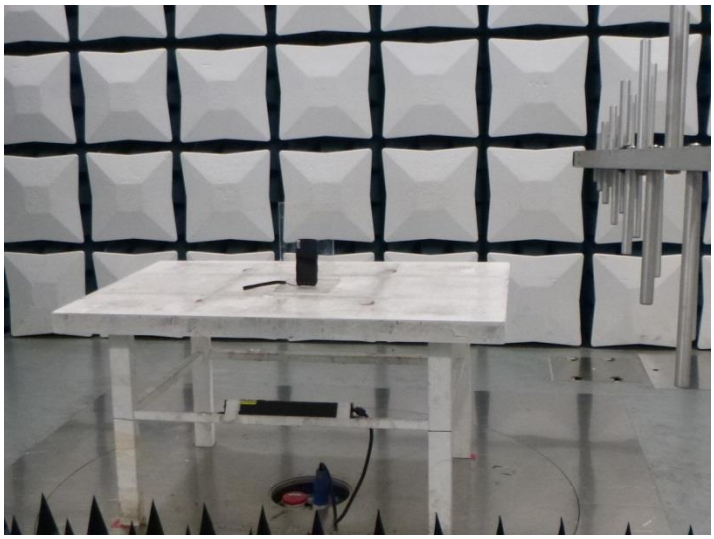

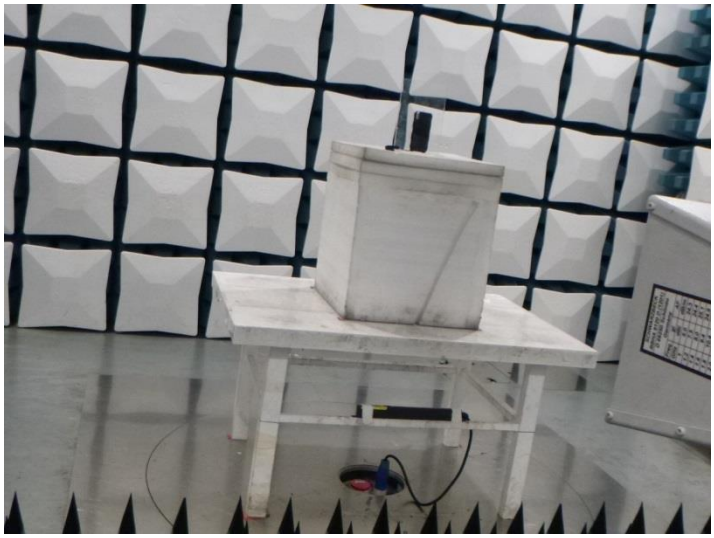

7. EXTERNAL AND INTERNAL PHOTOS OF THE EUT

Refere to the test report No.: CHTEW21110173

8. APPENDIX REPORT