LAGOON USER MANUAL

November, 2016 Version 1.0

Copyright © ePropulsion 2016-2017 All Rights Reserved

Acknowledgements

Thanks for choosing ePropulsion products, your trust and support in our company are sincerely appreciated. We are dedicated to providing high-performance underwater thrusters, as well as electric outboards, reliable lithium batteries and accessories.
Welcome to visit www.epropulsion.com and contact us if you have any concerns.

Using this Manual

Before use of the product, please read this reference manual thoroughly to understand the correct and safe operations. By using this battery, you hereby agree that you have fully read and understood all contents of this manual. ePropulsion accepts no liability for any damage or injury caused by operations that contradict this manual.

Due to ongoing optimization of our products, ePropulsion reserves the rights of constantly adjusting the contents described in the manual. ePropulsion also reserves the intellectual property rights and industrial property rights including copyrights, patents, logos and designs, etc.

This manual is subject to update without prior notice, please visit www.epropulsion.com for the latest version. If you find any discrepancy between your products and this manual, or should you have any doubts concerning the product or the manual, please visit www.epropulsion.com. ePropulsion reserves the rights of final interpretation of this manual.

This manual is multilingual, in the case of any discrepancy in the interpretation of different language versions, the English version shall prevail.

Symbols

The following symbols will help to acquire some key information.

⚠ Important instructions or warnings

Useful information or tips

Product Identification

Below Figure 0-1 indicates the position of the Lagoon Battery label where the serial number locates. Please record the serial number for access to maintenance or other after-sale services.

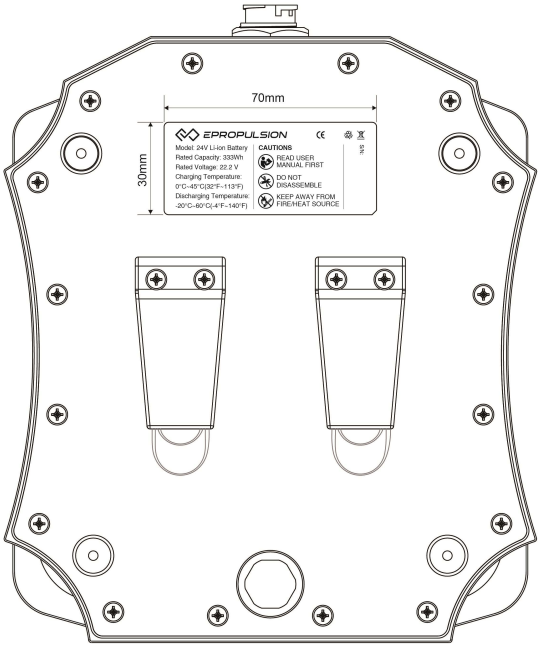

Figure 0-1

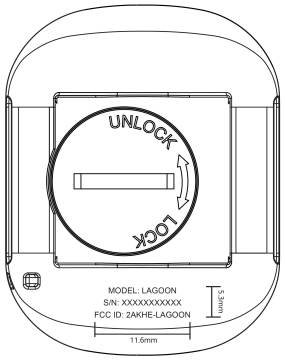

Figure 0-2

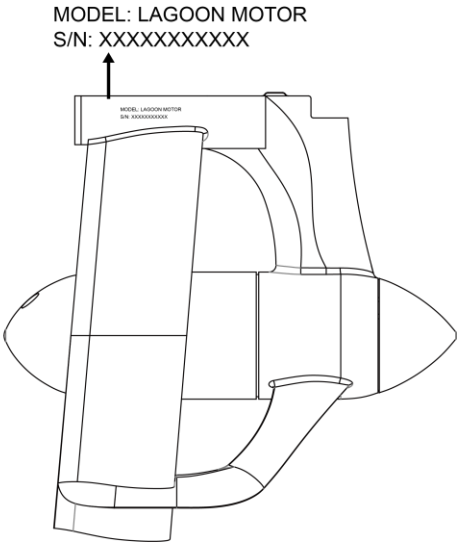

Figure 0-3

Table of Contents

Acknowledgements 1
Using this Manual 1
Symbols 1
Product Identification 2
Table of Contents 3
1 Important Safety Instructions 4
2 Product Overview 5
2.1 In the Package 5
2.2 Parts and Diagram 7
2.3 Technical Data 9
2.4 Declaration 10
3 Installation 11
3.1 Installation of Lagoon Motor 11
3.1.1 Installing with a Standard Adapter 11
3.1.2 Installing with Lagoon Universal Adapter 13
3.2 Fixing Lagoon Battery 14
3.3 Connecting Lagoon Battery to Lagoon Motor 16
4 Operation 17
4.1 On/Off Button on Lagoon Controller 17
4.1.1 Power On/Off the Lagoon Controller 17
4.1.2 Put Lagoon Controller into Pairing Status 18
4.2 Power Button on Lagoon Battery 18
4.2.1 Switch On/Off the Lagoon Battery 18
4.2.2 Put Lagoon Battery into Pairing Status 19
4.3 Pair the Lagoon Controller with Lagoon Battery 20
4.4 Wirelessly Control the Lagoon Motor 20
4.5 Charging and Discharging 22
4.5.1 Lagoon Battery Indicators 22
4.5.2 Charging the Lagoon Battery 22
4.6 Replacing Button Cell for Lagoon Controller 23
5 Troubleshooting 25
6 Transport and Storage 26
6.1 Transport 26
6.2 Storage 26
7 Routine Maintenance 27
8 Warranty Claims 28
8.1 Warranty Policies 28
8.2 Out of Warranty 29
8.3 Warranty Claim Procedures 29

1 Important Safety Instructions

This user manual contains important information pertaining equipment installation and safe operations. Before starting to use the product, please read this manual fully and pay special attention to the following safety instructions:

⚠ Before Operation:

- Users who are allowed to use Lagoon should be in good physical state, know how to swim, how to paddle. Users who don't know how to swim must wear a life vest while using this product. And always take a paddle on board.
- Only adults who have thoroughly read and fully understood this manual are allowed to operate this product.
- Check the status and function of Lagoon before use and make sure all components are in good condition.
- Make sure the Lagoon Motor is securely mounted on the bottom of the SUP/kayak, etc. before operation.
- Make sure the Lagoon Controller works well by wireless connection.
- Familiarize yourself with all the operations related to this product.
- Check applicable local water safety rules and boating regulations before use.
- Observe the environment in advance to avoid unfavorable conditions like strong winds, waves, currents or rapids, etc.

⚠ During Operation

- Do not run the motor out of water or in shallow water. Only operate it in water with enough depth and avoid all possible obstacles.
- Follow the correct operating instructions in this user manual.
- Attach the Lagoon Controller to your wrist or paddle for easy access.
- Do not run the motor if swimmers or other watercrafts is near the boat.
- Press the on/off button on the Lagoon Controller immediately in emergent situations.
- Observe local water safety rules and boating regulations while operating the product.
- Do not run the motor under the influence of alcohol or drugs.
- Switch off the Lagoon Battery and Lagoon Controller before detaching the Lagoon Motor from the SUP/kayak, etc.

⚠ Handling

- Never dismantle or repair the product on your own or by any unauthorized third party.
- Keep it away from water, flammable gas, corrosive and other dangerous substance.
- To store the product for a long time, dry and clean it first, then put it in the original package of Lagoon. Keep it in a dry and ventilated place without direct sun/rain exposure and store it far away from dangerous substances.
- Pay attention to battery safety and operate it in the right way to avoid short-circuit, overheat, overcharge and over-discharge. Never drop the battery.
- Only use Lagoon Charger designed for the battery. Other chargers may lead to shortened runtime, premature battery failure, or even fire or explosion.

2 Product Overview

Lagoon is a lightweight underwater electric propulsion system. The well-adapted Lagoon can be mounted on the back of nearly all kinds of SUPs, kayaks, canoes, etc. that traditionally depend on human paddling. This thruster mainly consists of a Lagoon Motor, a Lagoon Battery and a Lagoon Controller. This small-but-mighty propulsion system supports 1.1 hours of full-speed running, perfectly backing you up whether you need a rest or want to go further.

2.1 In the Package

Unpack the package and check if there is any damage caused during transport. Check all the items inside the package against the below list. If there is any transport damage or lack of any listed item, please contact your dealer immediately.

No.	Items	Qty./Unit	Figure
1	Lagoon Motor	1 set	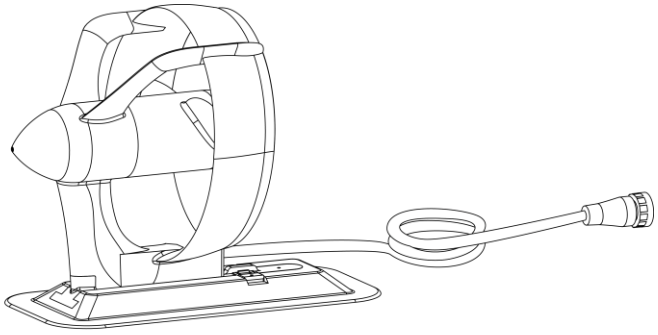
2	Lagoon Battery	1 set	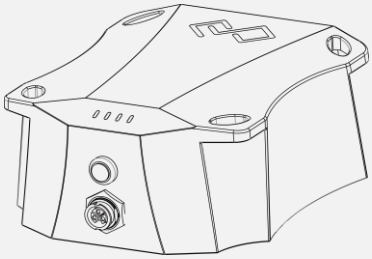
3	Lagoon Universal Adapter	1 set	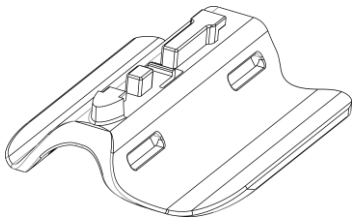

4	US Fin Box Adapter (standard)	1 set	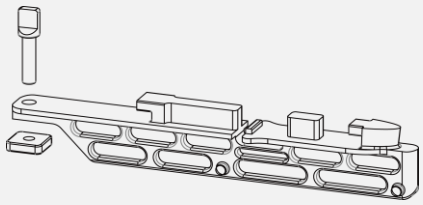
5	Inflatable SUP Fin Box Adapter (standard)	1 set	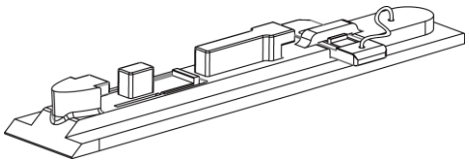
6	Strap	1 piece	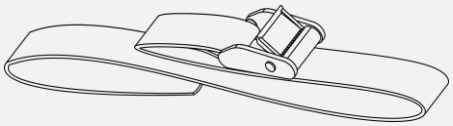
7	Lagoon Battery Charger	1 set	
8	Lagoon Controller with a Velcro	1 set	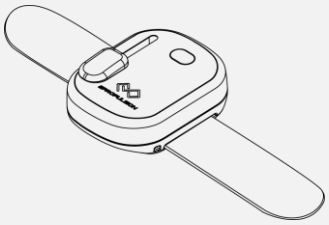
9	User Manual & Warranty Claim Card	2 copies	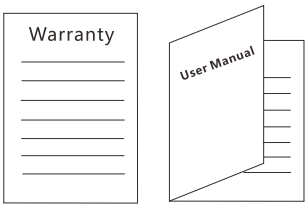

As three kinds of adapters are provided simultaneously, users can either choose a suitable standard adapter to fit into the fin box on the back of their watercraft or choose the Lagoon universal adapter to attach Lagoon motor to any type of SUP boards/kayaks or other small boats without a fin mounting system.

Other accessories mentioned in this manual are not included in the package. Please place additional orders if you need them.

Save the ePropulsion package for transportation and storage.

2.2 Parts and Diagram

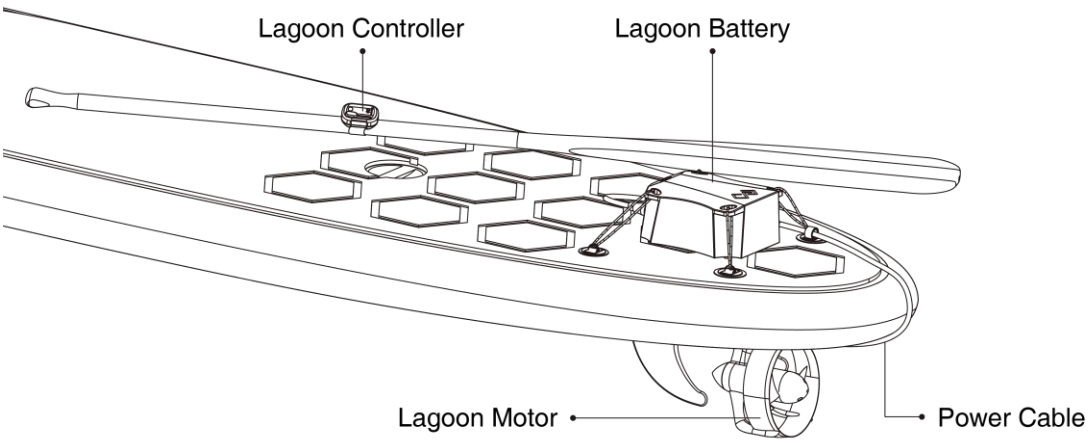

Figure 2-1 Lagoon

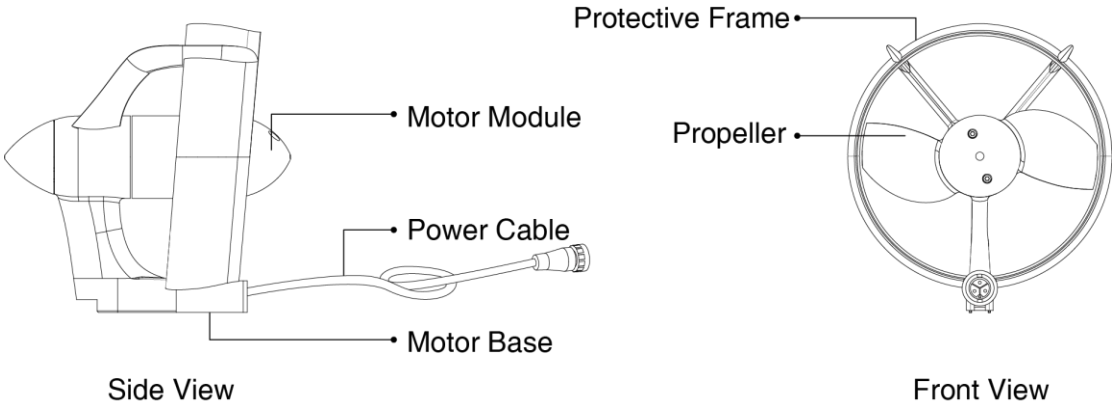

Figure 2-2 Lagoon Motor

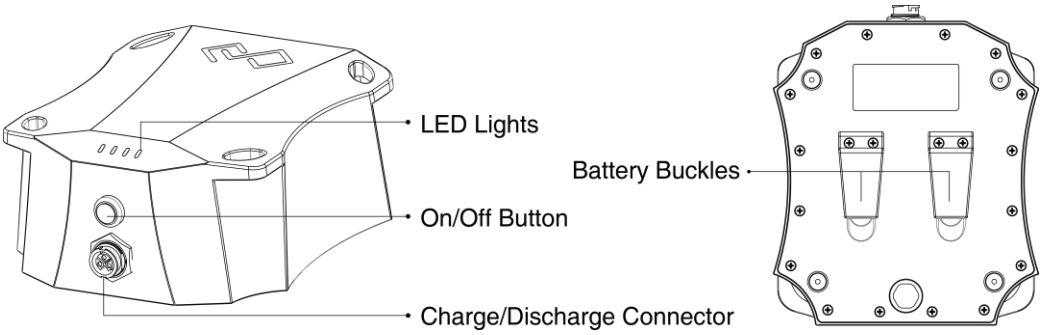

Figure 2-3 Lagoon Battery

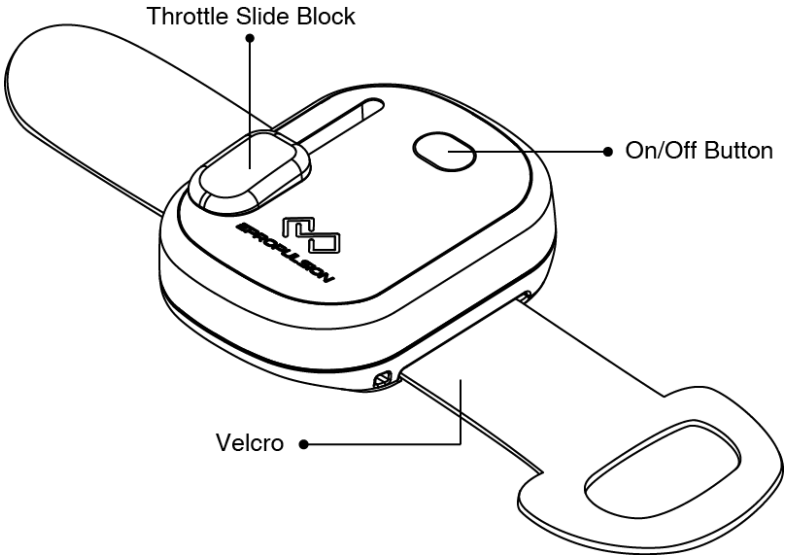

Figure 2-4 Lagoon Controller

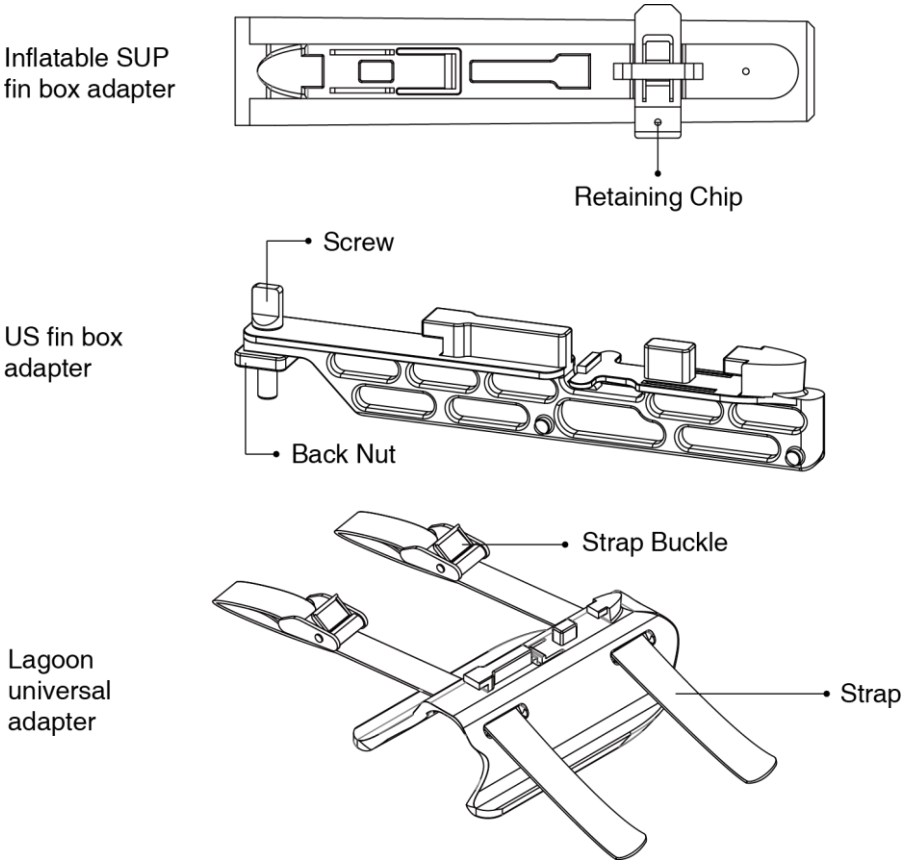

Figure 2-5 Adapters

2.3 Technical Data

General Data	
Input power	300w
Static thrust	25lbs
Total weight	4kg / 8.8lbs
Lagoon Motor weight	1.5kg / 3.3lbx
Dimension of Lagoon Motor	162mm x 167mm x 182 mm / 6.4" x 6.6" x 7.2"
Standard propeller diameter	150 mm / 5.9"
Propeller pitch	115 mm / 4.5"
Max propeller speed in rpm	1800 rpm
Control method	Wireless
Top speed	8.5kph / 5.3mph / 4.6knots
Running hour	Slow: 9h; Half throttle: 3.3h; Full throttle: 1.1h
Range	Slow: 45km / 28mi / 24.3nmi Full throttle: 9.4km / 5.8mi / 5.1nmi
Lagoon Battery	
Battery type	Lithium-ion
Rated capacity	333wh
Rated voltage	22.2v
Final charging voltage	25.2v
Cutoff voltage	18v
Weight	2.5kg
Cycle life	≥500 cycles (80% of rated capacity)
Temperature range	Charging: 0˚C ~ 45˚C / 32˚F ~ 113˚F Discharging: -20˚C ~ 60˚C / -4˚F ~ 140˚F
Relative humidity	65 ± 20%RH
Dimension of battery (L x W x H)	216mm x 178mm x 100mm / 8.5" x 7" x 4"
Lagoon Controller	
Throttle	Stepless throttle
Forward/Reverse control	Forward control available
Power source	One built-in button cell (CR2032)
Lagoon Charger	
Input power	180w
Input voltage	100v ~ 240v
Input frequency	50Hz / 60Hz
Input current (AC)	≤ 3A
Output (DC)	25.5V / 7A
Charging time	3hrs
Weight of Lagoon Charger	0.7kg
Temperature range	Operating: -29˚C ~ 45.5˚C / -20.2˚F ~ 113.9˚F

	Storage: -40˚C ~ 75˚C / -40˚F ~ 167˚F
Efficiency	≥87%

Battery performance is dependent on external factors such as operating conditions and watercraft, etc.

2.4 Declaration

This device complies with part 15 of the FCC Rules. Operation is subject to the following two conditions: (1) This device may not cause harmful interference, and (2) this device must accept any interference received, including interference that may cause undesired operation.

Changes or modifications not expressly approved by the party responsible for compliance could void the user's authority to operate the equipment.

3 Installation

Lagoon is designed to be perfectly fits into two major standard fin boxes – US fin boxes and inflatable SUP fin boxes. The Lagoon universal adapter can easily adapt the Lagoon Motor to nearly all kinds of SUPs/kayaks/canoes, etc. without a standard fin-mounting system. This part introduces how to install the Lagoon Motor and how to fix a Lagoon Battery on a SUP/kayak.

3.1 Installation of Lagoon Motor

Before installing the Lagoon Motor to a SUP/kayak, etc., the user should be noted that the SUP/kayak, etc. must be strong enough to stand the motor module and the battery.

3.1.1 Installing with a Standard Adapter

There are two standard adapters included in the Lagoon package: US fin box adapter and inflatable SUP fin box adapter. These two standard fin box adapters can be used with the majority of standard fin mounting systems on the market. Choose a suitable one and follow the below steps to attach the motor module to the standard fin box on the bottom of the SUP/kayak.

a. Installing with a US fin box adapter

1) Attach a US fin box adapter onto the motor module base as shown in Figure 3-1. First align the adapter with the motor base; then insert the adapter into the motor base until it is well attached.

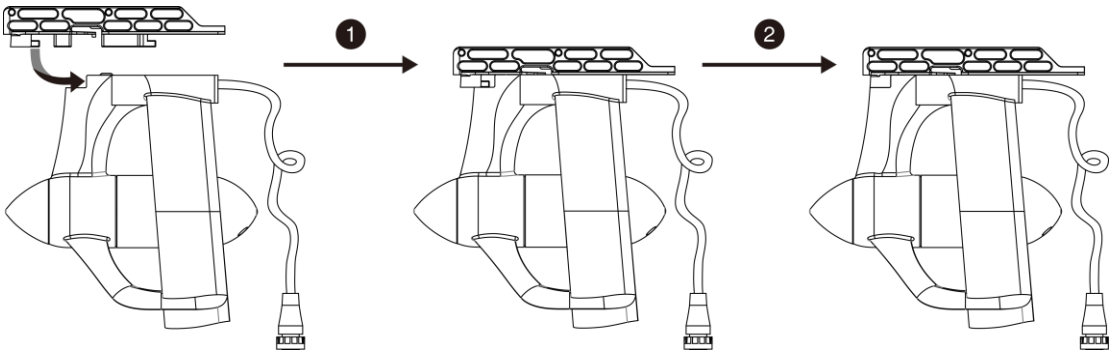

Figure 3-1

2) Turn the SUP/kayak bottom upward.
   Step1: Place the back nut in the adapter kit into the cave of the US fin box with the propeller faces the tail of the SUP/kayak.
   Step2: Insert the US fin box adapter attached on the bottom of Lagoon Motor in the direction of the arrow;
   Step3: Insert the screw into the hole of the adapter and screw it tightly into the back nut placed inside the fin box to fix the adapter.
   Step4: The Lagoon motor is well attached to the US fin box.

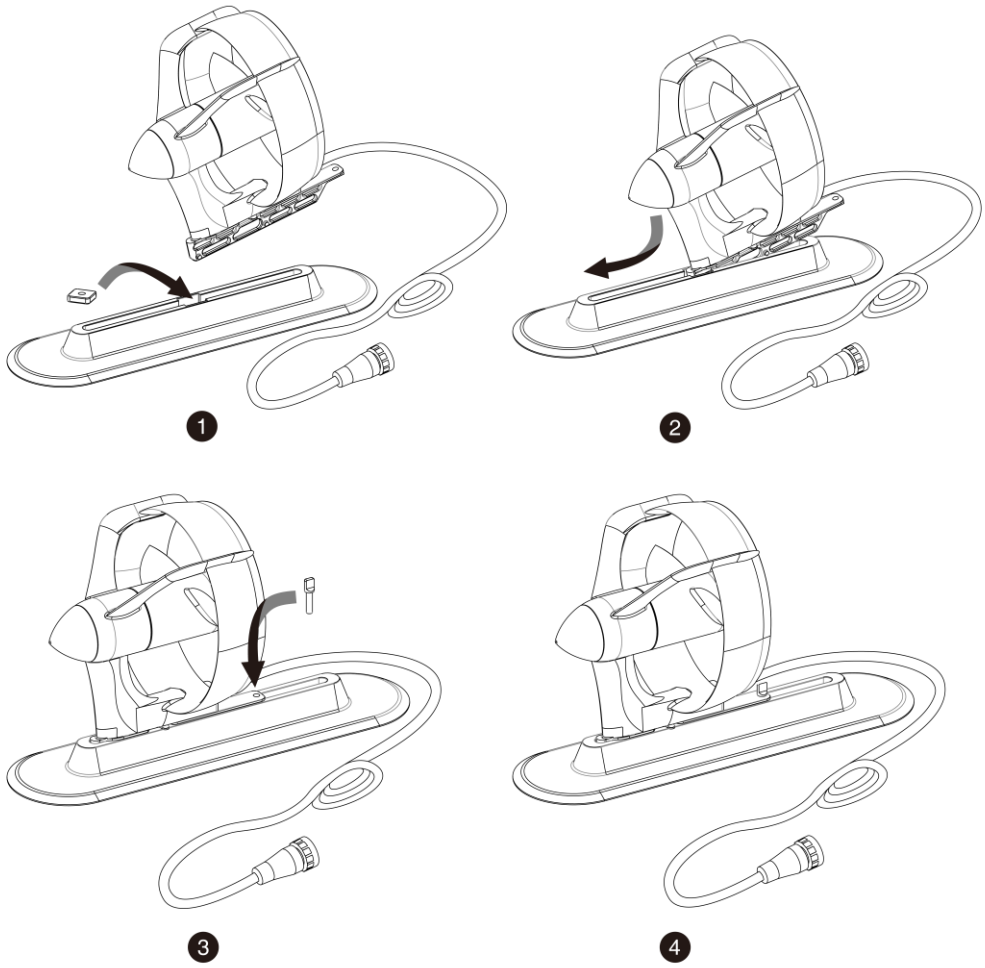

Figure 3-2

b. Installing with an inflatable SUP fin box adapter

1) Attach an inflatable SUP fin box adapter onto the motor module base as shown in Figure 3-3. First align the adapter with the motor base; then insert the adapter into the motor base until it is well attached.

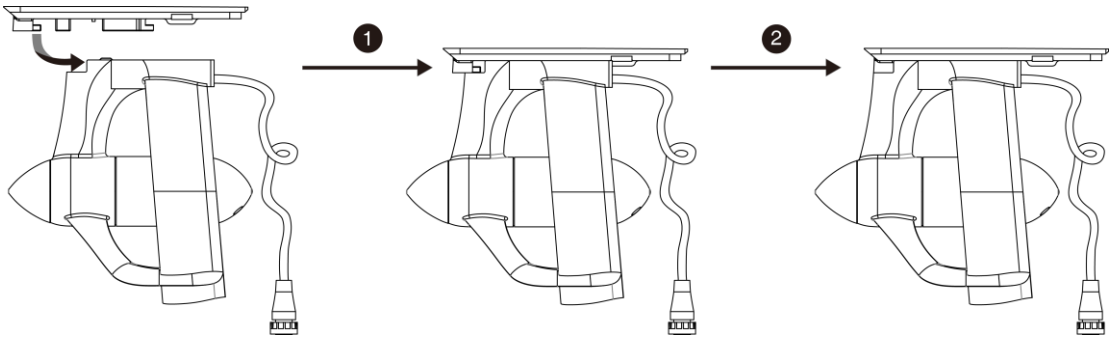

Figure 3-3

2) Turn the SUP/kayak bottom upward.
   Step1: Slide the standard adapter into the cave of the inflatable SUP fin box with the

propeller facing the tail of the SUP/kayak.

Step2: Insert the retaining chip into the place indicated in Figure 3-4 to fix the adapter.

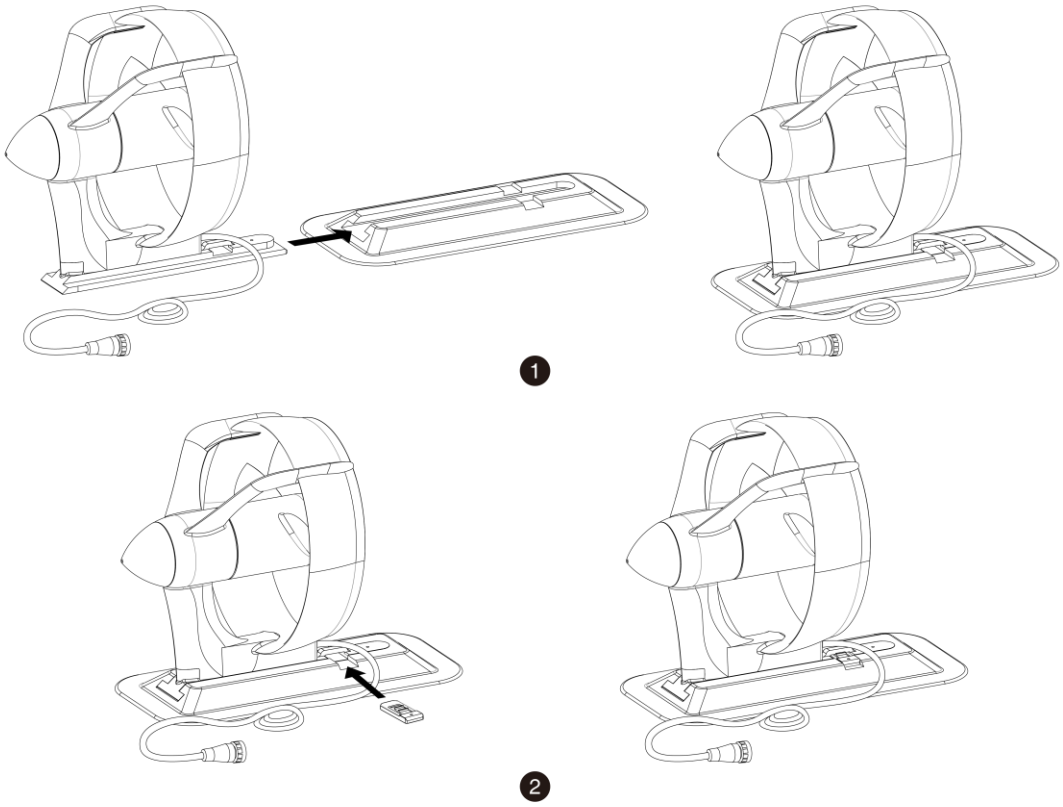

Figure 3-4 Fit into inflatable SUP fin box

Make sure the fin box is clean before installation of the motor module.

Do not force the adapter into the fin box. If the adapter can't be fit into the fin box properly, slide it out and check if the installing direction is correct.

3.1.2 Installing with Lagoon Universal Adapter

If the SUP/kayak, etc. has no fin box or if both the two standard adapters can't fit into the existing fin mounting system, it's suggested to use Lagoon universal adapter to fix the motor module onto the bottom of the board/boat. This universal adapter is especially designed by ePropulsion engineers for adaptation of Lagoon to almost every kinds of SUPs/kayaks/canoes/small boats, etc. While mounting with ePropulsion universal adapter, please follow the below steps.

① Turn the bottom of the SUP/kayak, etc. upward and fix the universal adapter onto the relatively flat part of the bottom with a strap. Then fix the strap buckles. Please refer to the below figure.

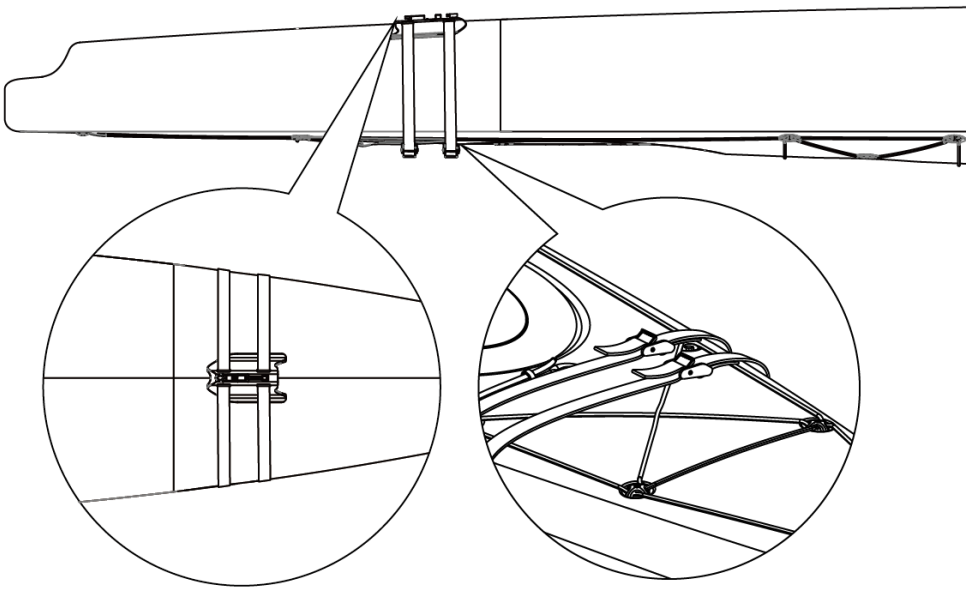

Figure 3-5

② Attach the motor module to the universal adapter in the direction of the arrow.

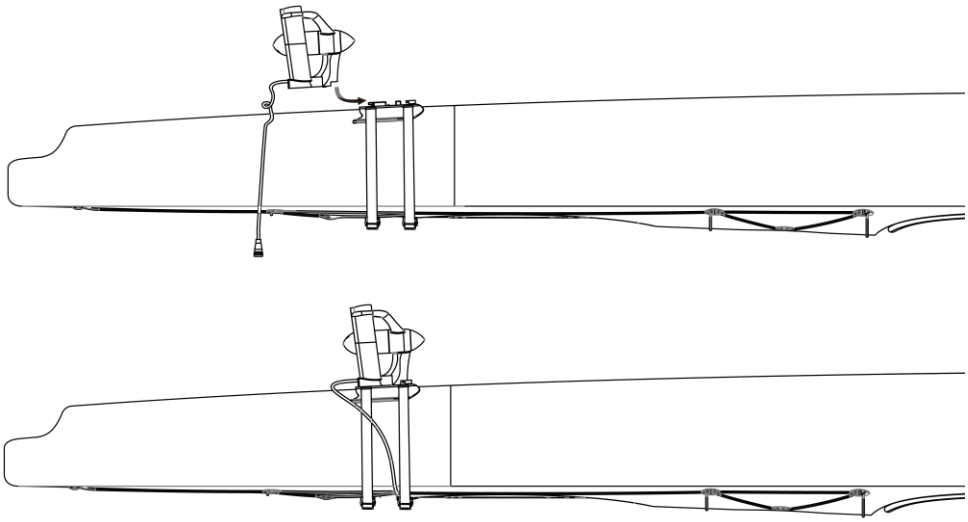

Figure 3-6

⚠ While installing the universal adapter, make sure the adapter is in alignment with the bottom centerline of the SUP/kayak, etc.

3.2 Fixing Lagoon Battery

a. Fixing Lagoon Battery on SUPs

There are two major methods of fixing the Lagoon Battery on a SUP board. For SUP boards with a bungee system, the battery can be fixed with the bungee cords.

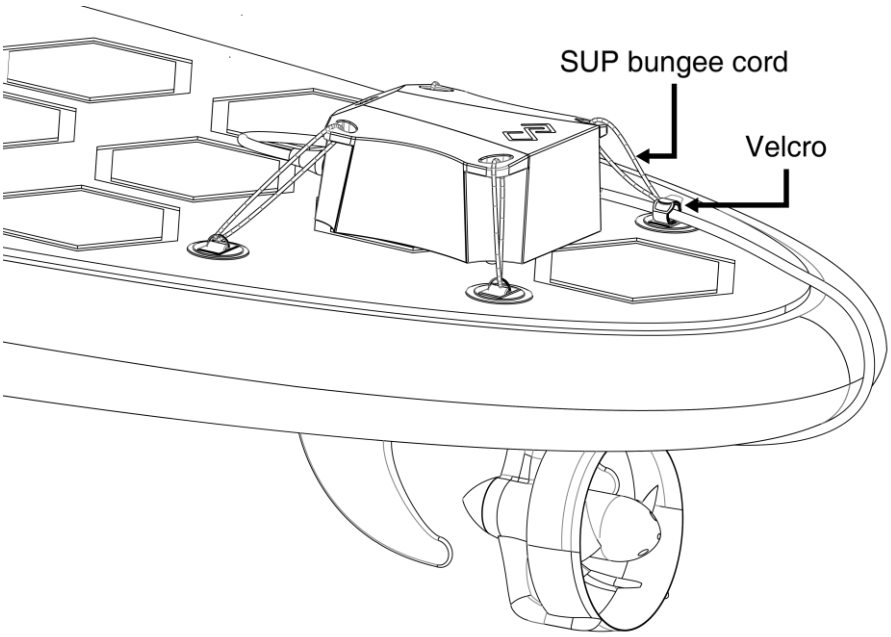

Figure 3-7 Fix the battery with the SUP bungee system

For SUP boards without bungee system, users can make use of the Battery buckles on the bottom of the Lagoon Battery to clip a strap tied around the board.

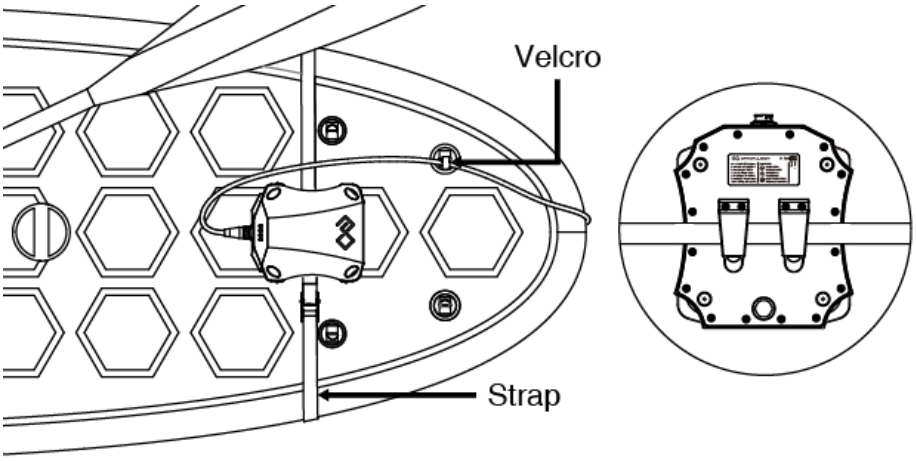

Figure 3-8 Fix Lagoon Battery with its bottom buckles

Fix the redundant power cable with a Velcro.

b. Fixing Lagoon Battery on Kayaks

For kayaks with enough cabin space, the battery can be simply placed inside the cabin. For some kayaks or canoes with a tail bungee system, the battery can also be fixed on the rear part of the board/boat with bungee cords.

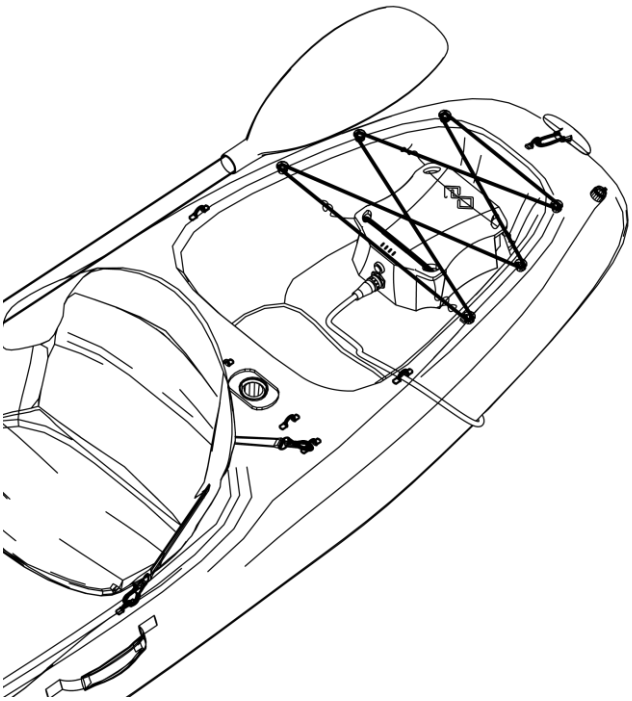

Figure 3-9

3.3 Connecting Lagoon Battery to Lagoon Motor

Flip the SUP/kayak, etc. over after the motor module is firmly installed on the bottom. Plug the motor cable connector into the battery and fix the power cable with a Velcro as shown in the below figure.

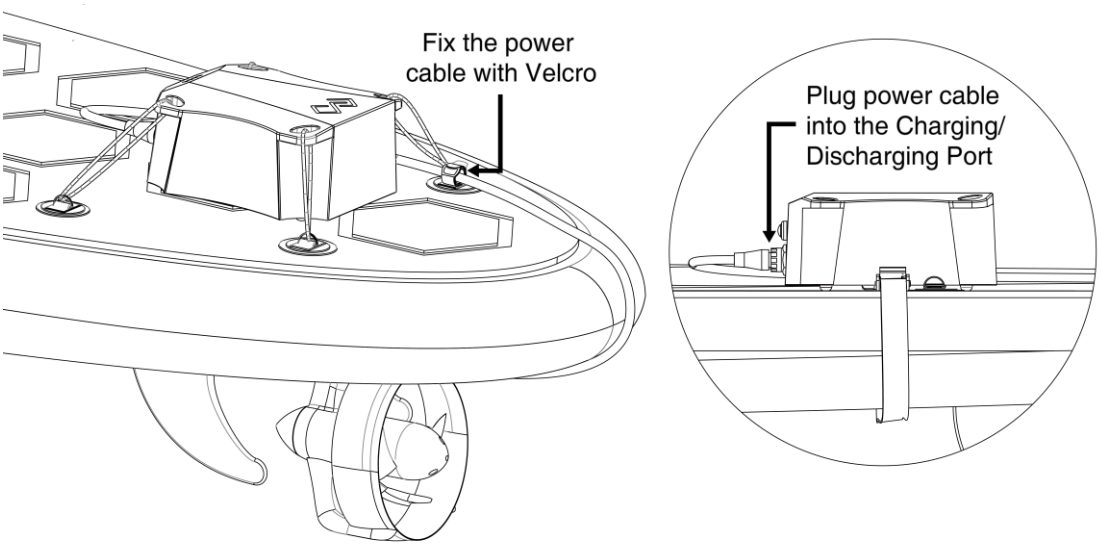

Figure 3-10

4 Operation

This part introduces how to switch on/off the Lagoon Controller and Lagoon Battery, how to pair the Lagoon Controller with the Lagoon Battery, how to control the speed, charge the Lagoon Battery as well as how to replace a new button cell built in the Lagoon

4.1 On/Off Button on Lagoon Controller

Users can both switch on/off the controller or put the controller into pairing status by pressing the on/off button of Lagoon Controller. The two sub-sections introduce how to realize these functions by pressing the on/off button. Below figure indicates the position of the power button on Lagoon Controller.

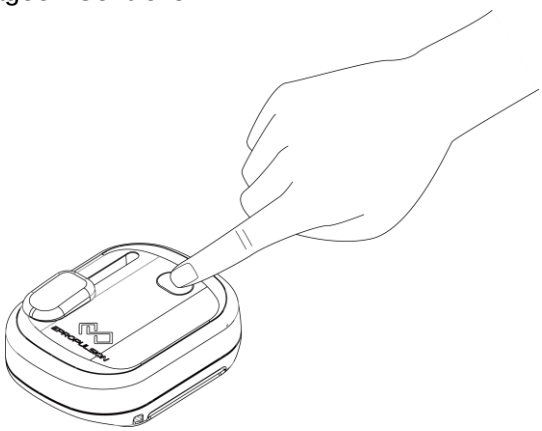

Figure 4-1

4.1.1 Switch On/Off the Lagoon Controller

Below table displays how to switch on/off the Lagoon Controller by pressing the on/off button in normal situations. Pay attention to the operational differences in switching on and switching off the Lagoon Controller.

Power state of Lagoon Controller	Operations	Description
Power off	Short press the on/off button.	If only one beep is issued, it indicates that the controller starts normally;
Power on	Long press the on/off button until a beep is heard.	Lagoon Controller is switched off.

⚠ If the buzzer beeps continuously (and the system powers off automatically after 10 seconds), it indicates that the battery is of insufficient voltage and replacement of a new button cell battery (model: CR2032) for the Lagoon Controller is required. Please refer to section 4.6 Replacing Button Cell for Lagoon Controller.

⚠ If you just want to stop the motor at once, please short press the on/off button in power-on state.

⚠ Before powering on the Lagoon Controller, make sure the Lagoon Motor is safely attached to the bottom of the SUP/kayak, etc. and do not touch the motor to avoid hurting by the rotating propeller.

4.1.2 Put Lagoon Controller into Pairing Status

Below table displays how to put Lagoon Controller into pairing status by pressing the on/off button in normal situations.

Power state of Lagoon Controller	Operations	Description
Power is off	Press and hold the on/off button until a beep is issued.	The Lagoon Controller enters pairing state.

Before conducting the above operations, users should first put Lagoon Battery into pairing status. Please refer to the following section 4.2.2 to learn how to put the Lagoon Battery into pairing status.

4.2 Power Button on Lagoon Battery

Users can both switch on/off the battery or put the battery into pairing status by pressing the power button of Lagoon Battery. The two sub-sections introduce how to realize these functions by pressing the power button. Below figure indicates the position of the power button on Lagoon Battery.

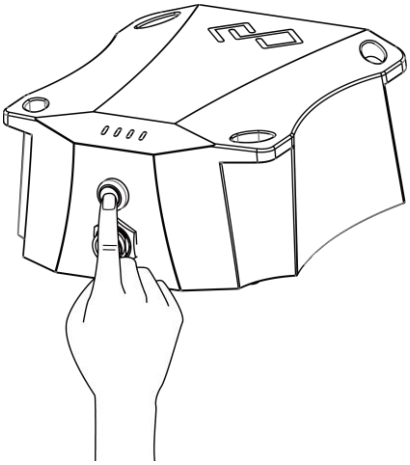

Figure 4-2

4.2.1 Switch On/Off the Lagoon Battery

The below table displays how to switch on/off the Lagoon Battery by pressing the power button and observing the condition of the Lagoon Battery LED lights.

Operation	Description

Switch on the battery	In power-off state, long press the power button until all the four LED lights light up one by one. Then the actual battery level will display.
Switch off the battery	In power-on state, long press the on/off button until all the four LED lights light up and then light off one by one.

⚠ Make sure the Lagoon Battery is switched off before mounting the Lagoon Motor.

⚠ Before switching on the Lagoon Battery, make sure the Lagoon Motor is safely mounted on the bottom of the SUP/kayak, etc.

⚠ Switch off the Battery before detaching the Motor from the SUP/kayak, etc.

When switching on the Lagoon Battery, first all the four LED lights will light up one by one from left to right regardless of the actual remaining battery; then the LEDs will display the remaining battery capacity, eg. if there is only 70% remaining battery capacity, the left three LEDs will light up.

When switching off the battery, all the four LED lights will light up first regardless of the actual battery level, then the four lights will light off one by one from right to left.

If no electrical activity is detected within an hour after the battery is powered on, the battery will enter sleep mode automatically. The battery should be restarted if it is going to be used.

4.2.2 Put Lagoon Battery into Pairing Status

The below table displays how to put Lagoon Battery into pairing status by pressing the power button and observing the condition of the Lagoon Battery LED lights. There are totally three steps:

Operations	Description
Step1: Power on the Lagoon Battery	In power-off state, long press the power button until all the four LED lights light up one by one.
Step2: Short press the power button	First short press the power button of the battery and four LED lights will flash simultaneously with an interval of 500ms.
Step3: Long press the power button	Long press the button for over 5 seconds until the four LED lights flash more frequently with an interval of 200ms, which indicates the wireless module embedded in the battery having entered the pairing status.

Pay attention to Step2 and Step3. As soon as Step2 is finished, please enter Step3 immediately within **2 seconds**. If you enter Step3 after 2 seconds, the pairing process may fail.

4.3 Pair the Lagoon Controller with Lagoon Battery

The Lagoon Controller has been paired with the Lagoon Battery prior to delivery by ePropulsion engineers, but pairing job has to be carried out by users again if the original Lagoon Battery or Lagoon Controller is replaced with a new one. Users can follow the following instructions to finish pairing.

1) Switch off the Lagoon Controller. Hold the Lagoon Controller close to the battery; make sure the distance between the Lagoon Controller and the Lagoon Battery is within15cm;
2) Long press the power button to switch on the battery. First short press the power button of the battery; when the four LED lights flash simultaneously with an interval of 500ms, quickly press and hold the button for over 5 seconds until the four LED lights flash more quickly with an interval of 200ms, which indicates the wireless module embedded in the battery having entered the pairing status.
3) Long press the on/off button on the Lagoon Controller until a beep is heard, which indicates the Lagoon Controller having entered the pairing status; then release the button.
4) If the pairing succeeds, another beep will be issued by the Lagoon Controller, and the four LED lights on the Lagoon Battery will light up one by one, otherwise the pairing fails.

Keep the Lagoon Controller close to the Lagoon Battery while pairing.

Do not use the Lagoon Controller out of the SUP/kayak, etc. as the Lagoon Controller may fail to receive wireless communication signal from the Lagoon Battery.

4.4 Wirelessly Control the Lagoon Motor

a. Attach the Lagoon Controller

The user-friendly Lagoon Controller is wearable and simple. Users can either attach it to paddle or wear it on wrist for easy access, or just hold it in hand. If you are going to wear it, follow the following two steps:

First, penetrate a Velcro through the side opening of the Lagoon Controller;

Then, bind the strap tightly around the wrist or paddle.

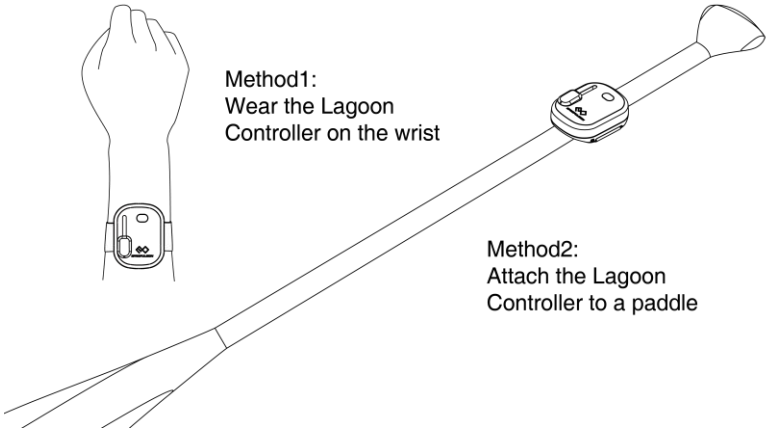

Figure 4-3

b. Start/Stop the Lagoon Motor

Start the motor: in power-off state, short press the on/off button on the Lagoon Controller to switch it on.

Stop the motor: in power-on state, short press the on/off button on the Lagoon Controller to stop rotation of the motor.

⚠ In emergency, press the on/off button immediately to stop the rotating motor at once.

If the Lagoon Controller falls into water by accident, the system will stop automatically to protect the safety of users.

If not in emergency, users can also slide the throttle slide block back to zero position to slow down gradually till the motor stops.

c. Speed Control

The Lagoon Controller supports stepless forward speed control. After the motor is started, slide the throttle slide block on the Lagoon Controller slowly forward to speed up. When the throttle slide block is pushed to the top position, the motor generates a max speed of 8.5kph/5.3mph or so. For SUPs/kayaks/boats without steering system, users can make use of a paddle to steer.

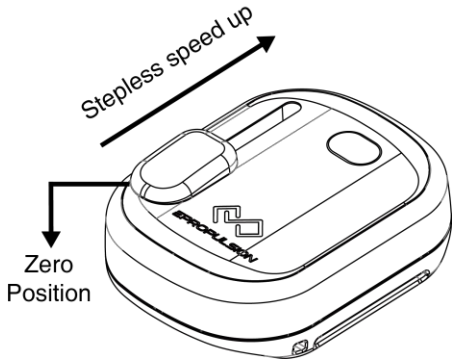

Figure 4-4

Reset the throttle slide block back to the zero position before restarting the system.

4.5 Charging and Discharging

4.5.1 Lagoon Battery Indicators

There are a total of four LED lights indicating battery level on the Lagoon Battery. The below Figure 4-3 indicates the position of the four LED lights.

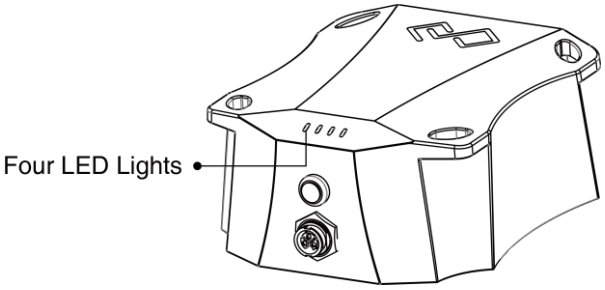

Figure 4-5

The following table illustrates the state of the four LED lights on the Lagoon Battery while charging and discharging.

Battery Condition	Description	Battery Level (L-H)			
Charging	0%~40%	★			
	40%~60%	●	★		
	60%~80%	●	●	★	
	80%~100%	●	●	●	★
	100%	●	●	●	●
Discharging	0%~20% battery	★	★	★	★
	20%~40% battery	●			
	40%~60% battery	●	●		
	60%~80% battery	●	●	●	
	80%~100% battery	●	●	●	●

Note: ● refers to steady light, ★ refers to flashing light with an frequency of 1s/1Hz.

When the discharging battery is between 0% ~ 20%, the four LED lights will flash simultaneously with an interval of 1 second (a flash frequency of 1Hz).

4.5.2 Charging the Lagoon Battery

Important notes before charging:

1. Only use Lagoon Charger to charge Lagoon Battery. Do not use any third party chargers.
2. Only charge the Lagoon Battery in temperature range of 0˚C~45˚C (32˚F~113 ˚F).
3. Avoid water contact during charging process.
4. Avoid direct sun/rain exposure during charging process.
7. Do not overcharge the battery.
8. Keep the battery away from flammable substance like a carpet or wood during charging process.

9. In any case of emergency, please stop charging the battery immediately.

Charge the Lagoon Battery following the below steps:

1) Power off the battery first. Then disconnect the battery power cable with the motor and remove the battery from the board/boat.
2) Connect the output cable of the specified battery charger to the battery, then connect the power plug of the charger to the household wall socket.

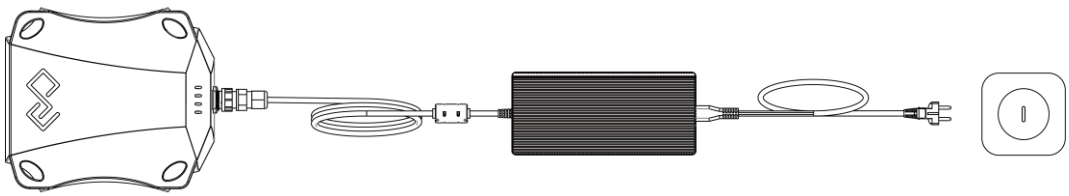

Figure 4-6

Switch the battery off after charging process has finished.

It takes about 3 hours to fully charge a completely depleted battery.

Self-discharge may occur in the process of transportation and storage. Therefore, it is advised to fully charge the battery before each use.

4.6 Replacing Button Cell for Lagoon Controller

Lagoon Controller is powered by a built-in button cell (model: GR2032). Short press the on/off button in power-off state, if the buzzer beeps continuously (the system powers off automatically after 10 seconds), it indicates that the button cell built inside Lagoon Controller is of insufficient voltage and replacement of a new button cell (model: CR2032) is required.

You can replace a new button cell referring to the below steps:

Step1: Screw off the cell cover on the back of the Lagoon Controller in the direction marked with “UNLOCK”.

Step2: Open the cell cover and replace the old button cell with a new one.

Step3: Screw on the cell cover in the direction marked with “LOCK”.

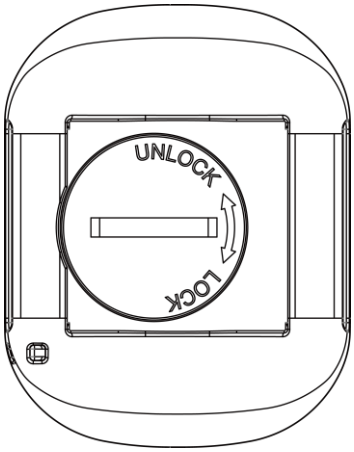

Figure 4-7

5 Troubleshooting

LED Status	Errors	Solutions
LED2 flashes	Lagoon Controller communication failure	1. Make sure the Lagoon Controller is powered on. 2. Please refer to the section 4.3 *Pairing the Lagoon Controller* to pair.
LED3 flashes	Other errors of the battery, such as battery over-current, over voltage, etc.	Please restart the Lagoon Battery
LED1, LED2, LED3 all flash	Battery over-temperature	Stop operation and wait until the temperature falls within the normal operating temperature range.

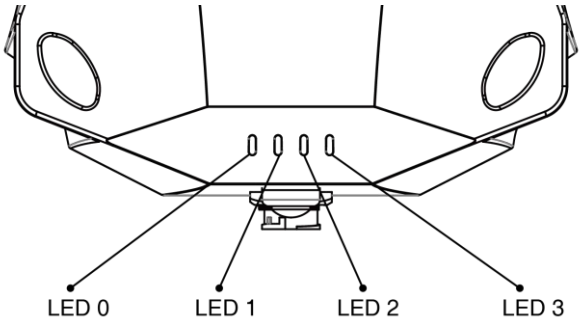

Figure 5-1

In error status, the LED lights flash with an interval of 100ms (i.e. a flash frequency of 10Hz).

If the error status lasts for an hour, the battery will enter sleep mode automatically. Restarting the system can activate the battery again.

During the charging process, the LED lights only display the charging status except for over-temperature error.

If an error occurs during the discharging process, the LED lights will display battery level and error alternately.

If an error occurs during the wireless pairing process, the LED lights will only display the pairing status until the pairing is completed.

If multiple errors occur simultaneously, the errors are displayed as the following sequence: battery over-temperature → Other errors of the battery → Lagoon Controller communication failure.

6 Transport and Storage

6.1 Transport

For long-distance transport, please apply the original package of Lagoon to pack the product prior to delivery.

⚠**Important notes before transport:**

- Check and ensure the package is intact without any damage.
- Avoid violent vibration, strike or squeeze during transport. Get adequate damping protection measures before transport.
- Do not expose the Lagoon Battery to the sun or rain during transport.
- Check applicable laws and regulations before transport.

6.2 Storage

If you are not going to use Lagoon for a long time, it is advised to clean and check it prior to storage. It is recommended to pack Lagoon with its original package for storage.

⚠**Important notes before storage:**

- Make sure that each part of the product is dry before storing it in the package.
- Get adequate damping protection before storage.
- Store Lagoon Battery in a clean, dry and well-ventilated area without direct sun exposure.
- Avoid contact with corrosive substance which may cause permanent damage, weaken or destroy the plastic of Lagoon.
- Keep the Lagoon Battery away from any sources of fire, sparks, open flame or heat.
- Charge the Lagoon Battery before use after long-time storage.

7 Routine Maintenance

Various factors like operation environment (such as temperature, humidity, dust, etc.), aging and wear of internal components, will affect the performance of the product. Routine maintenance is very important for keeping Lagoon in its optimal operating state.

- It's suggested to take the Lagoon Motor out of the water after use.
- Check the cable regularly for damage.
- Charge the Lagoon Battery after each use.
- Do not run the Lagoon Motor out of water or in shallow water.
- Do not run the Lagoon Motor in water area with thick sediment.
- Clean the exterior of Lagoon Motor with fresh water after each use.
- Clean the debris in the cave of the adapters after each use.
- Do not drop Lagoon Battery and avoid it from direct sun/rain exposure for a long time.
- Check the battery level on a regular basis.
- Stop discharging the Lagoon Battery and charge it soon if the battery gets low.
- Before the first time use or reuse after long-term storage, charge the Lagoon Battery to its full capacity in order to achieve its best performance.
- Only use Lagoon Charger designed for the Lagoon Battery. Other chargers may lead to shortened runtime, premature battery failure, or even fire or explosion.
- Use the battery in moderate temperature to avoid negative effects of extreme temperature posed on battery lifespan and useful cycles.
- Once a fault occurs, deal with the problem in time to avoid any further damage. If necessary, consult the ePropulsion authorized dealer for repair or parts replacement.
- Always follow the instructions provided with the battery manufacturer. Refer to this user manual and find the latest version available at www.ePropulsion.com.

FCC Statement

This equipment has been tested and found to comply with the limits for a Class B digital device, pursuant to Part 15 of the FCC Rules. These limits are designed to provide reasonable protection against harmful interference in a residential installation. This equipment generates uses and can radiate radio frequency energy and, if not installed and used in accordance with the instructions, may cause harmful interference to radio communications. However, there is no guarantee that interference will not occur in a particular installation. If this equipment does cause harmful interference to radio or television reception, which can be determined by turning the equipment off and on, the user is encouraged to try to correct the interference by one or more of the following measures:
-- Reorient or relocate the receiving antenna.
-- Increase the separation between the equipment and receiver.
-- Connect the equipment into an outlet on a circuit different from that to which the receiver is connected.
-- Consult the dealer or an experienced radio/TV technician for help.
This device complies with part 15 of the FCC Rules. Operation is subject to the following two conditions:
(1) This device may not cause harmful interference, and (2) this device must accept any interference received, including interference that may cause undesired operation.
Changes or modifications not expressly approved by the party responsible for compliance could void the user's authority to operate the equipment.

8 Warranty Claims

The ePropulsion limited warranty is provided for the first end purchaser of an ePropulsion product. Consumers are entitled to a free repair or replacement of defective parts or parts which do not conform with the sales contract. This warranty operates in addition to your statutory rights under your local consumer law.

8.1 Warranty Policies

ePropulsion Technology Ltd. keeps its products free of defects in material and workmanship for a limited period since the date of purchase. Once a fault is discovered, the user has the right to make a warranty claim under the warranty policies of ePropulsion.

Product	Warranty Expiry Date
Lagoon	**One year** after the date of purchase
Repaired or replaced parts	Three months since the date of maintenance. Note: 1. If the three-month period overlaps with the original warranty period, the warranty against these replaced or repaired parts still expire one year after the date of purchase. 2. If the three-month period exceeds the original warranty period, the repaired or replaced parts continue applying to warranty during the extended period.

In order to validate the warranty, users are required to fill in the Warranty Claim Card in advance.

Keep the product label in an intact state and record the serial number on the label. Never tear the label off the product. An ePropulsion product without the original product label will not be applicable to warranty services provided by ePropulsion.

The warranty is valid only when the information on the Warranty Card is filled in correctly and completely.

Free warranty is only validated upon the presentation of legal serial number, Warranty Claim Card, and evidence of purchase from an authorized ePropulsion dealer.

Valid date of purchase should be established by the first-hand purchaser with original sales slip.

Free warranty is not transferable and will not be reissued.

8.2 Out of Warranty

Make sure the product is properly packed during delivery, the original product package is recommended. If the product got further damaged due to improper packing during delivery, the furtherly damaged part will be deemed as out of warranty coverage.

In addition, faults or damages caused by the following reasons are also excluded from warranty scope within the covered period:

- Any improper operation contradicts the user manual.
- Accident, misuse, wishful abuse, physical damage overcharging or unauthorized repair.
- Dropping, improper care or storage.

You should be noted that minor faults like normal wear and tear that pose no influence on the intended function of the product are also not covered by the warranty.

Consumables are out of warranty scope.

8.3 Warranty Claim Procedures

If you find your product defective, you can make a claim to your dealer following below procedures:

1. Fill in the Warranty Claim Card correctly and completely in advance. Then make your warranty claim by sending it to your authorized ePropulsion service partner together with valid proof of purchase. Usually these documents are required when making a warranty claim: the Warranty Claim Card, ex-factory serial number, and evidence of purchase.
2. Send the defective product to your authorized ePropulsion service point after getting the confirmation. Note that the label should be kept intact. You can also deliver the product to your authorized ePropulsion dealer after getting confirmation.
3. The defective components or parts will be either repaired or replaced according to the diagnosis made by the ePropulsion authorized service partner.
4. If your warranty claim is accepted, the equipment will be repaired or replaced free of charge.
5. After careful examination and confirmation by ePropulsion authorized dealer, the defective or faulty components will be repaired or replaced with brand new ones against the actual condition.
6. In case your warranty claim be rejected, an estimated repair charge with round trip delivery cost included will be sent for confirmation. ePropulsion authorized service point will conduct maintenance accordingly only after your confirmation.

If warranty expires, you can still enjoy maintenance serivces from authorized ePropulsion service partners with minimum maintenance charge.

Thanks for reading this user manual.

If you have any concerns or find any problems
while reading, please don't hesitate to contact us.
We are delighted to offer service for you.

ePropulsion Technology Ltd.
Website: www.epropulsion.com
Email: service@epropulsion.com