TZS

THANK YOU

FOR CHOOSING TZS

TZS

USER GUIDE
STEREO WIRELESS HEADSET
MODEL: 22BF08

BACKGROUND NOISE REDUCTION FOR CALLS

In the Box

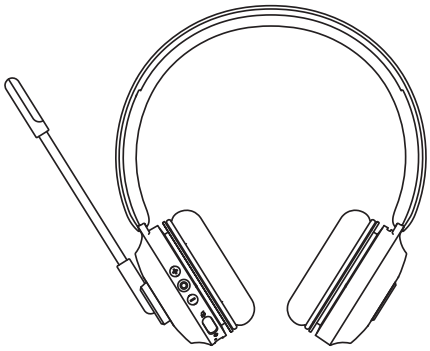

Headset

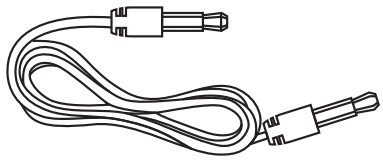

3.5mm Audio Cable

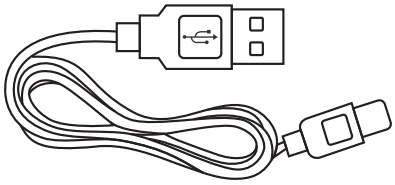

Type-C Charging Cable

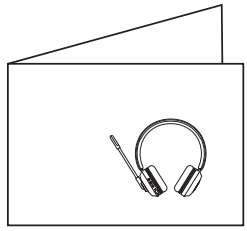

User Guide

Overview

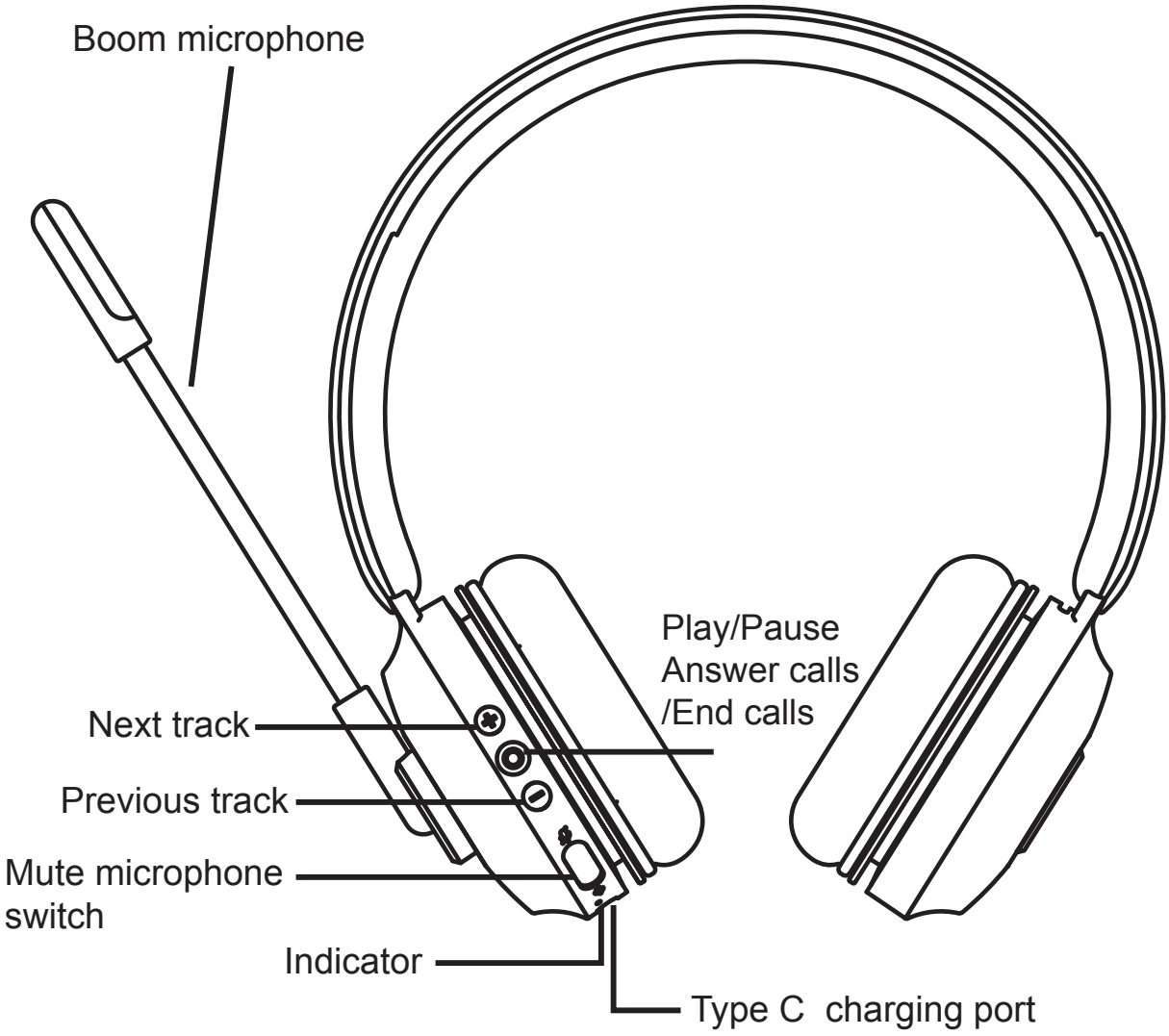
Boom microphone
Play/Pause
Answer calls
/End calls
Next track
Previous track
Mute microphone
switch
Indicator
Type C charging port

How to Wear

1. The boom microphone can move to accommodate a user's preference for right side or left side wear.

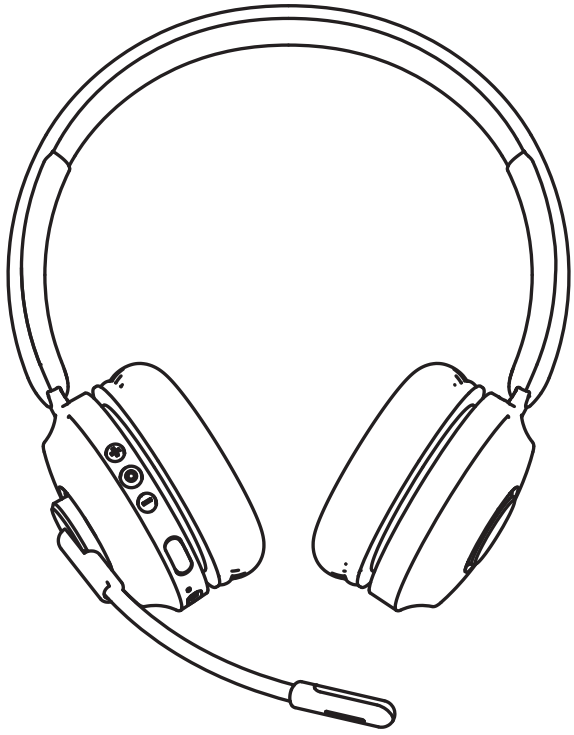

2. Position the microphone to your preference.

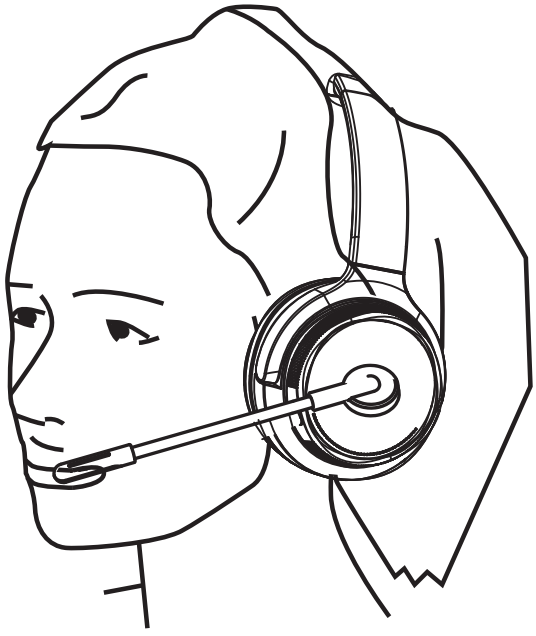

Power On

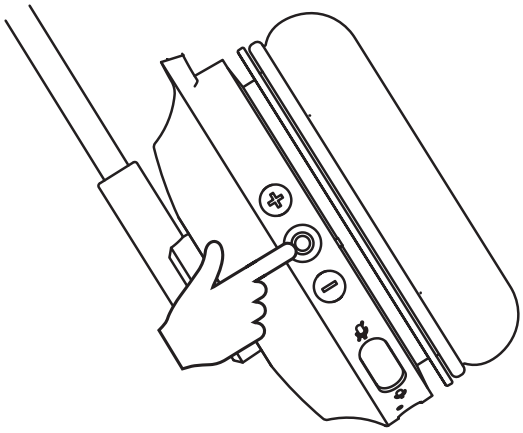

Press and hold the ◉
for 3 seconds

Power Off

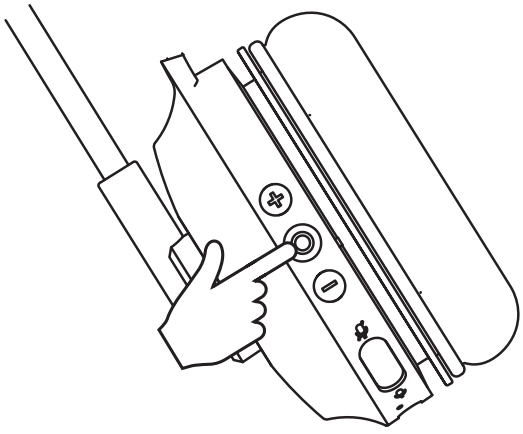

Press and hold the ◉
for 3 seconds

Volume +/-

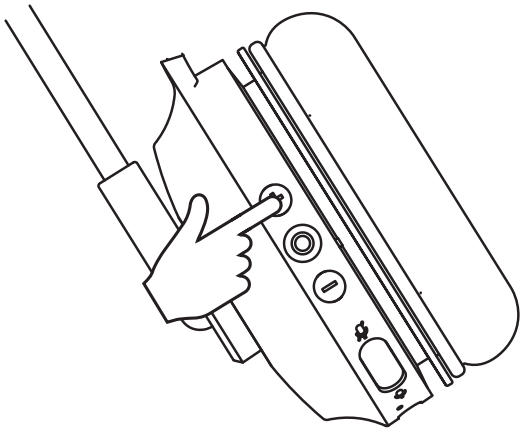

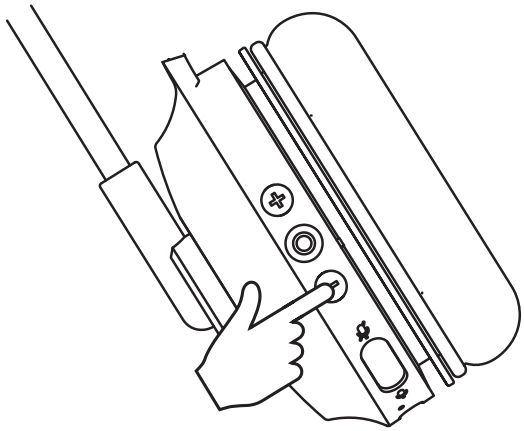

Click the **+** button to increase the volume,
click the **-** button to decrease the volume.

Previous/Next song

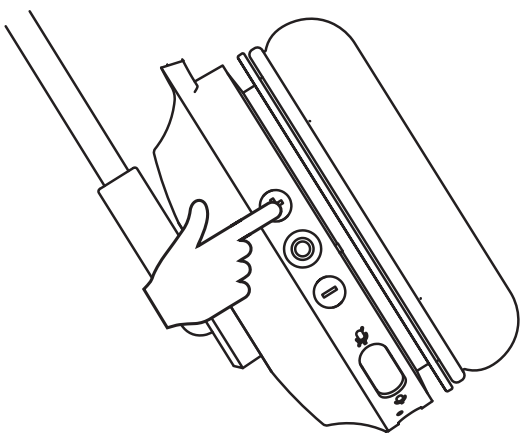

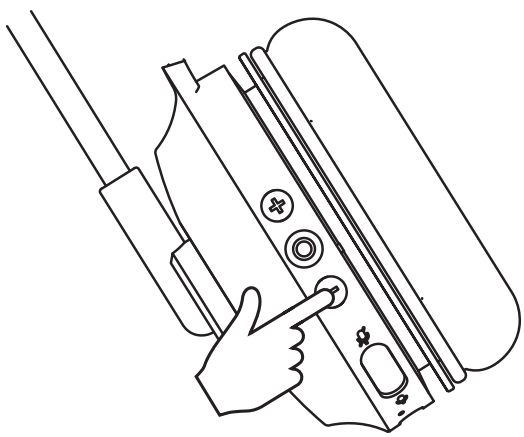

Press and hold the **+** button to skip to the next song,
press and hold the **-** button to skip to the previous song.

1. How to connect with the Bluetooth device.

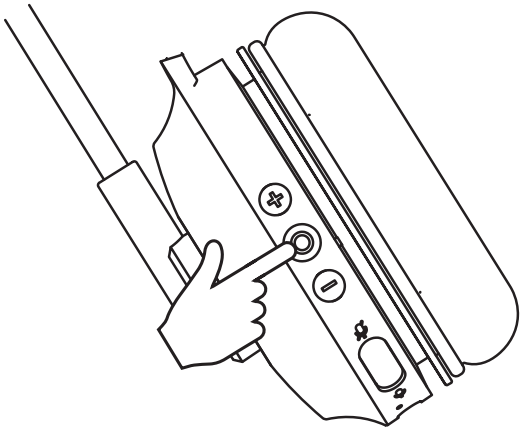

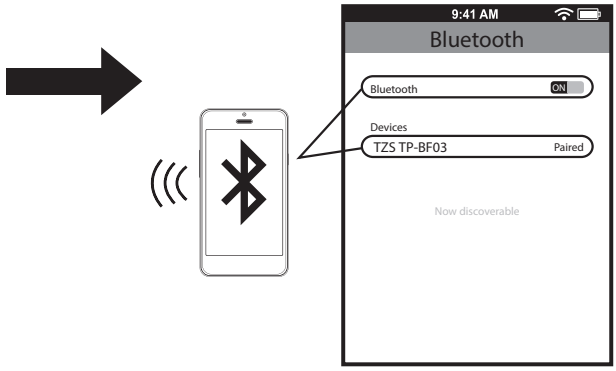

Press and hold the button 3S 'power on' head, the pairing LED will be flash, and 'pairing' will be heard

Activate "Bluetooth" in your device's settings and select "TZS TP-BF03.

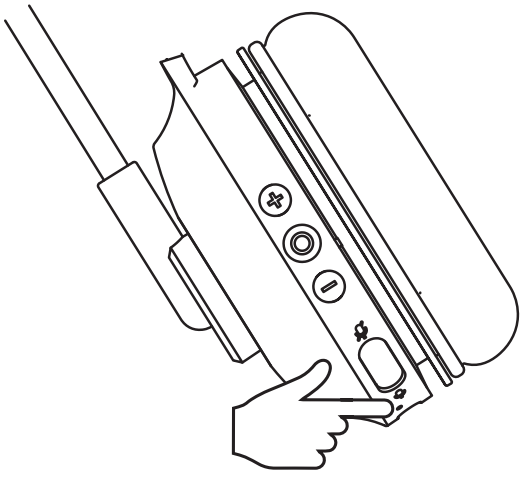

The LED will flash blue to indicate the headphone is connected, and 'connected' is heard.

2. How to connect with two Bluetooth devices.

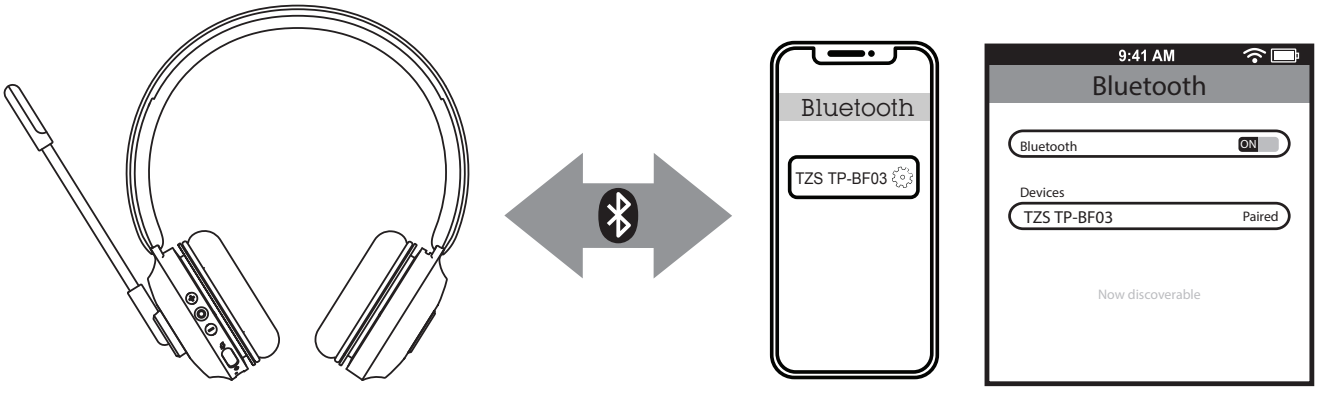

Device 1 Device 2

When you first device connected successfully, switch the first device Bluetooth off, activate your second device Bluetooth， connect the headphone, and then activate the first device Bluetooth, the headphone will be reconnected the first device, and then the headphone connected the 2 devices successfully.

Calls with a Smartphone

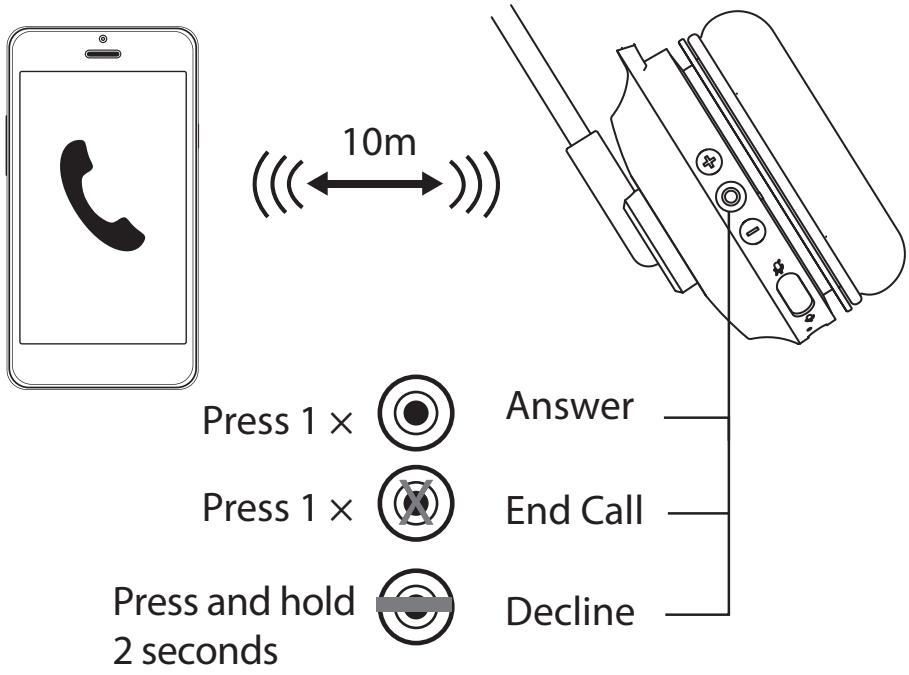

Siri/Cortana/Assistance

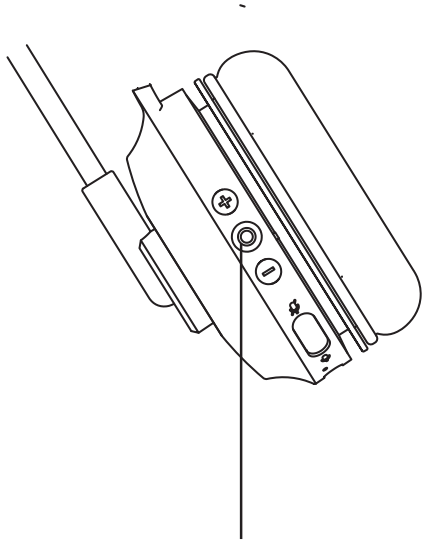

Press and hold 2 seconds then release

Charging the Headset

During charging the red LED will light. When fully charged, the LED will turn off. The headset will be off during the charging.

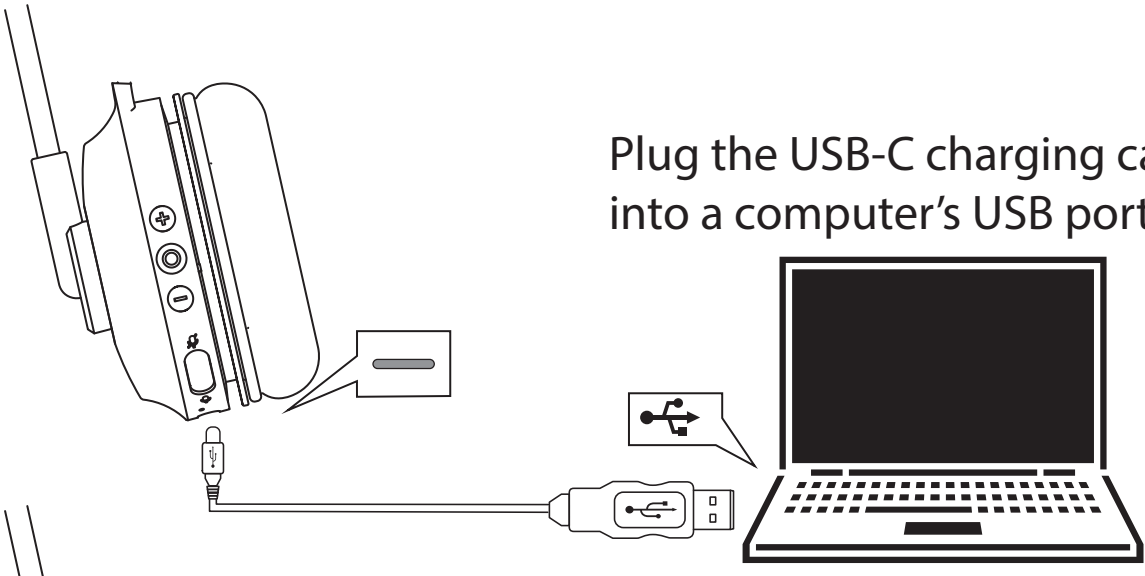

Plug the USB-C charging cable into a computer's USB port.

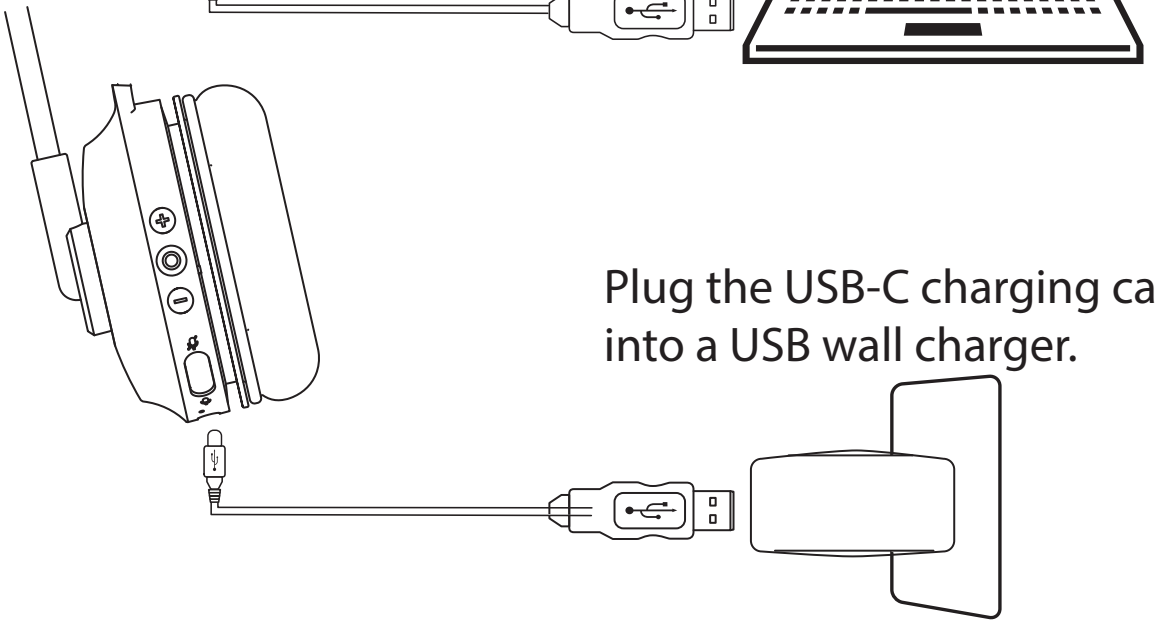

Plug the USB-C charging cable into a USB wall charger.

Other Operations

Muting the Boom Mic: Switch the mute button to the off

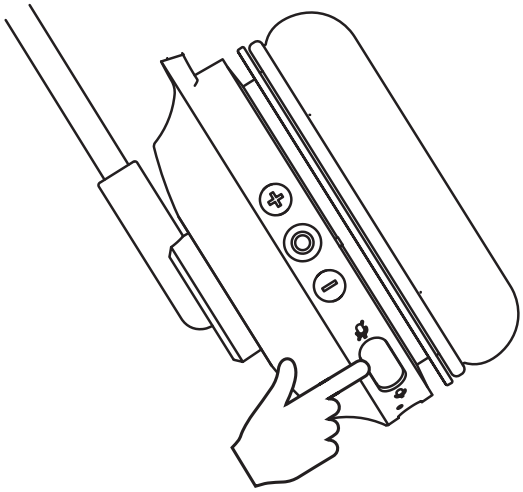

Clearing the pairing: Press and hold the for 10 seconds while the headset is off

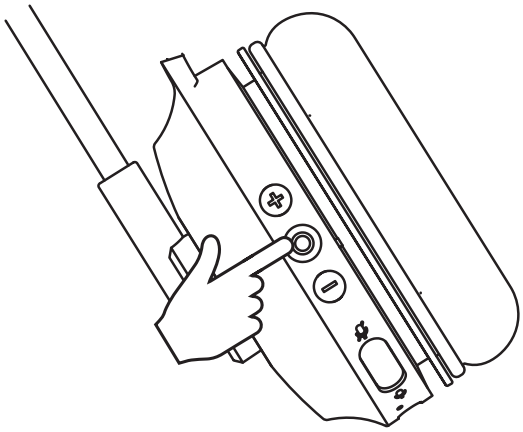

Product Specifications

Bluetooth version: Bluetooth V5.0
Bluetooth Profile: A2DPv1.3.1; AVRCPv1.6; HFPv1.7; HSPv1.2; SPP v1.2; DID v1.3; HID v1.1; PXP v1.0.1; FMP v1.0; BAS v1.0
Working Frequency: 2.402GHz-2.480GHz
Frequency Response: 104±3dB
Receiving sensitivity: >-89dBm
Battery type: Lithium polymer
Mic type and sensitivity: Virtual Microphone -42±3dB
Headphone Driver Size: 30mm
Battery capacity: 400mAh
DC Input: 5V_500MA
FCC ID: 2AKI8-TP-BF03
Charging voltage: 5V/2A
Bluetooth working range: Up to 10m
Talk time: Up to 36 hours
Charging time: Approximately 2.5 hours
Standby time: Approximately 110 hours
Compatibility: Windows 10, mac OS 10.14 or later,iOS and Android

WARNING

Headsets can deliver sounds at loud volumes and high-pitched tones. Avoid prolonged use of the headset at excessive sound pressure levels. Please read the safety guidelines below prior to using this headset.

Safety information

Use of a headset will impair your ability to hear other sounds. Use caution while using your headset when you are engaging in any activity that requires your full attention. This package contains small parts that may be hazardous to children and should be kept out of reach from children.Do not attempt: To dismantle or service the product as this may cause a short circuits or other malfunction which could result in a fire or electric shock.Avoid exposing your product to rain, moisture or other liquids to avoid damage to the product or injury to you. Keep all products, cords, and cables away from operating machinery. Avoid use while operating a motor vehicle.

Built-in battery care: Please observe the following if the product contains a battery. Your product is powered by a rechargeable battery.

The full performance of a new battery is achieved only after two or three complete charge and discharge cycles. The battery can be charged and discharged hundreds of times but will eventually wear out.

Always try to keep the battery between 15°C and 25°C (59°F and 77°F). A product with a hot or cold battery may not work temporarily, even when the battery is fully charged. Battery performance is particularly limited in temperatures well below freezing.

Battery warning!

CAUTION – The battery used in this product may present a risk of fire or chemical burn if mistreated. Do not attempt to open the product or replace the battery. This will void the warranty.

Troubleshooting & Support

Headphones will not power on:

• Be sure the headphones are fully charged.

My mobile device is unable to find the Bluetooth headphones

• Confirm the headphones are in pairing mode (blue/red indicator lights flashing).

• Remove “TZS TP-BF03” from your phone’s Bluetooth device list and try again.

• If the model still does not appear, restart the headset and phone, then try again.

After successfully pairing, the headphones disconnect

• Be sure the battery has adequate power and recharge.

• Headphones must be within 10m of most mobile devices.

• Connections may be affected by obstructions such as walls or other electronic devices. Try moving closer to the device you are connected to.

When answering a call, I cannot hear anything

• Ensure the mobile device is connected to the TZS TP-BF03 headphones and not on phone’s speaker or other audio option.

• Increase the volume on your mobile device.

There is no sound when listening to music

- Increase the volume on your headphones or the mobile device.
- Reestablish the Bluetooth wireless connection between the headphones and your mobile device.
- Check if the audio app has paused or stopped playback.

Headphones will not charge

- Confirm that the charging cable is operational or undamaged.
- Ensure that the USB charging cable is fully seated in the headphones and wall charger ports.
- Confirm that the USB port is outputting power. Some USB ports shut off when the PC is off.

FCC Statement

Any changes or modifications not expressly approved by the party responsible for compliance could void the user's authority to operate the equipment.
This device complies with Part 15 of the FCC Rules. Operation is subject to the following two conditions:
(1) this device may not cause harmful interference, and
(2) this device must accept any interference received, including interference that may cause undesired operation.

Note: This equipment has been tested and found to comply with the limits for a Class B digital device, pursuant to Part 15 of the FCC Rules. These limits are designed to provide reasonable protection against harmful interference in a residential installation. This equipment generates, uses, and can radiate radio frequency energy, and if not installed and used in accordance with the instructions, may cause harmful interference to radio communications. However, there is no guarantee that interference will not occur in a particular installation. If this equipment does cause harmful interference to radio or television reception, which can be determined by turning the equipment off and on, the user is encouraged to try to correct the interference by one or more of the following measures:
– Reorient or relocate the receiving antenna.
– Increase the separation between the equipment and receiver.
– Connect the equipment into an outlet on a circuit different from that to which the receiver is connected.
– Consult the dealer or an experienced radio/TV technician for help