User Manual V 1.0

GDU Byrd

Contents

Features 4
- Portable Design 4
- Long Flight Time 4
- Multi-Adaptable Aircraft Platform 4
- HD Video Downlink System 4
- Anti-Shooting Propellers 4
- Dual Remote Controllers 4
- Stowage Dropping 4

Instructions 5
- Warnings 5
- Tutorial Video 5
- App Download 5
- Register 6

Aircraft 7
- Flight Mode 8
- RTH Mode 8
- Indicators of Aircraft Status 10
- Vision Positioning System 11
- Stowage Dropping 12

Remote Controller 14
- Dual Remote Controller 15
- HD Video Downlink System 15
- Gimbal Control 15
- Aircraft Operation 16
- Link 17

Gimbal 18
- Byrd-001 Gimbal 18
- Byrd-002 Gimbal 19
- Byrd-003 Gimbal 19
- Byrd-004 Gimbal 20

ProFlight App 22
- FCS Firmware Version Update 22
- ProFlight App 24

Assembling 29
- Aircraft Preparation 29
- Remote Controller Preparation 33

Flight 36
- Safety Alarms 36
- Pre-Check 36
- Accelerator Calibration 37
- Compass Calibration 37
- Take Off 38
- Landing 39

FAQ 40
Specifications 43
FCC Compliance 45
FCC Compliance 45
FCC Warning Message 45
FCC Radiation Exposure Statement: 45

CE1856

Features

Portable Design

The GDU Byrd design offers strength and portability. The entire unit collapses to about the size of an iPad!

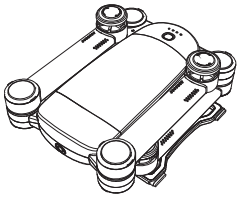

Long Flight Time

GDU Byrd is equipped with a high-storage battery. This allows the GDU Byrd to achieve 29 minutes flights.

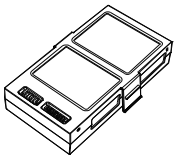

Multi-Adaptable Aircraft Platform

Using new attitude fusion algorithms, two controllable axes, bring you extreme image stabilization and vast vision. Choose from three different gimbals which are compatible with several cameras. Quick-Release design makes the replacement easier.

HD Video Downlink System

GDU Byrd is equipped with HD Video Downlink System, which supports real-time HD videos and pictures transmitting.

Anti-Shooting Propellers

The propellers offer dual safety protection. The propeller cap is a self-locking device which can prevent the blade from disconnecting. Even if the cap falls off, the propellers will stay in place.

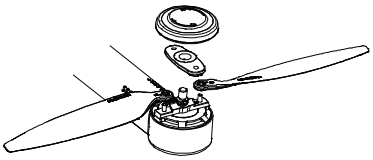

Dual Remote Controllers

Joy of flight comes from participation, interaction and communication. Dual remote controllers are designed particularly for sharing, the master unit has higher priority than the salve unit, offering safety during training and allowing the operator to share the flight experience.

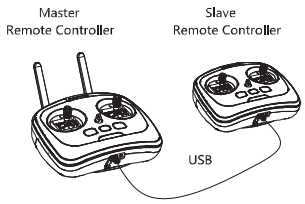

Stowage Dropping

The strong dynamic system could release more load task. You could choose objects for long distance ejection according to your needs.

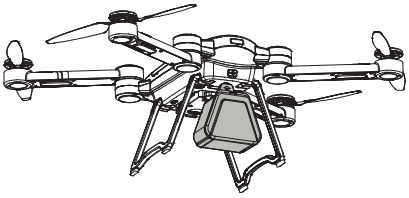

Instructions

Warnings

Thank you for purchasing the GDU Byrd. This product has the ability to cause serious bodily harm and even death as well as property damage if operated improperly. The GDU Byrd is a highly sensitive, highly tuned RC aircraft and should not be operated by persons under the age of 18. The operator is responsible for knowing the local laws and abiding by them. GDU is NOT responsible for improper/illegal use of this product.

CAUTION
RISK OF EXPLOSION IF BATTERY IS REPLACED
BY AN INCORRECT TYPE.
DISPOSE OF USED BATTERIES ACCORDING
TO THE INSTRUCTIONS

To ensure the quality of your experience and your personal security, please carefully read the following sections before operating the aircraft:

1. *Disclaimer*
2. *Battery Safety Guidelines*
3. *Routine Maintenance Manual*
4. *List*
5. *User Manual*
6. *After-Sale Service Manual*
7. *First flight guide and Fast advanced guide*

Tutorial Video

Besides the above written instructions, GDU also prepares tutorial video for you.
You can visit *www.gdu-tech.com* or scan the following QR code to watch and download the tutorial video to better learn how to use the aircraft.

App Download

To ensure the best experience, please scan the QR code with your mobile device, download and install the ProFlight App.

Register

To enjoy perfect after-sale services, please register your aircraft by visiting *www.gdu-tech.com*. Registering or not will not affect product's normal use, but we still invite you to be our VIP. Unscheduled official activities and more privileges have been prepared for you, stay tuned!

※ **Your registration information would be kept strictly confidential.**

Aircraft

① Nose LEDs	⑤ Battery Hatch	⑨ Micro-USB Interface
② Tail LEDs	⑥ Power Button	⑩ Vision Positioning System
③ Foldable Landing Gear	⑦ Motors	⑪ Dropping Box Interface
④ Foldable Propeller	⑧ Battery Level Indicators	⑫ HD Video Download System Interface

※ **Only Advanced and Premium versions have the capacity of 'Visual and acoustic positioning'.**

※ **Only Premium version is equipped with the 'Dropping Box'.**

Flight Mode

GDU Byrd Premium 2.0 supports the following three modes：

1. P-Mode（Positioning Mode）
When the GPS signal is good, the GPS module is used to maintain the aircraft's position;
When the GPS signal is not so good or is lost, it will turn to the visual and acoustic positioning (Advanced Version and Premium Version ONLY);
When both GPS positioning and the visual and acoustic positioning do not work, only the attitude stabilization is provided.

2. F-Mode（Course Lock Mode）
In this mode, forward control of the aircraft is related to the direction the pilot is facing and is not dependent upon the direction of the nose of the aircraft. Forward is forward even if the nose of the aircraft is pointing backward. This allows new pilots to enjoy flying while learning to control the orientation of the aircraft. This mode relies on GPS data, so please use it when GPS signal is good.

3. A-Mode（Attitude Mode）
GPS positioning and the visual and acoustic positioning are not used and only the attitude stabilization is provided. This is a manual mode and should only be used by experienced pilots.

※ **To change flight modes, please use the FLIGHT MODE switch on the remote control.**

RTH Mode

GDU Byrd has the function of returning to home automatically. If the home point is recorded successfully before the flight, then the aircraft will return to home point and land automatically when connection between the remote and the aircraft is lost. The following three conditions can cause this to happen: return to home is activated on remote control, when aircraft reaches low battery and when the aircraft loses contact with the remote control.

1. Home Point
Home point refers to the point at which the aircraft has been unlocked for the first time successfully and in Mode P AND the GPS signal is good. Home point will only be logged if starting off in MODE P. IT WILL NOT WORK IF FLIGHT IS STARTED IN OTHER MODES.

2. RTH Mechanism
When this mechanism is started, the red LED indicator light at the head of the aircraft keep on and the blue light at the end is on. At this time, the aircraft will rise or descend to the pre-set height (if the current height is lower than the pre-set height, the aircraft will rise to the pre-set height。 If it is lower, and the aircraft will descend to the pre-set height) and it will fly to the point above the home point and hover for five seconds before slowly landing.

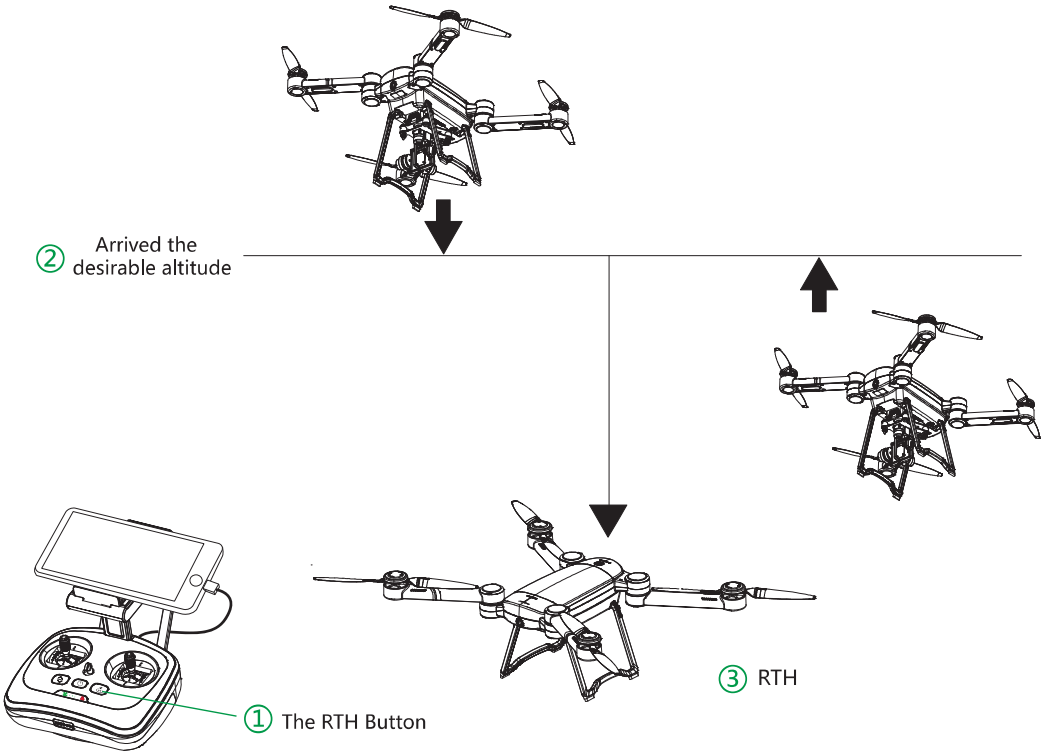

※ **When return to home is activated, the aircraft WILL NOT avoid obstacles. Please make sure that the height is set to avoid any obstacles between you and the aircraft. IF YOU CANNOT SEE THE AIRCRAFT, DO NOT ACTIVATE RETURN TO HOME.**

※ **Use the parameter adjustment software to change the height of the aircraft when return to home is activated. A safe altitude is dependent upon the environment in which you fly.**

3. RTH Switch

During the flight, click the 'Return to home' button in the remote controller or the 'Return to home' icon in the APP interface, the aircraft will return to home automatically .

RTH in Low Battery

Before RTH automatically happens, there is a warning issued to the pilot regarding the state of the flight battery.

• Low Battery Warning

When the battery capacity is less than 30%, the warning for the low battery will be triggered and a warning tone form APP will be sound to alert you to return to home immediately.

• RTH in Severe Low Battery

When the electric quantity is less than 20%, the battery is serious low and the aircraft will return to home automatically.

4. RTH when Remote Control Signal is Lost

In normal conditions, the GPS signal is good, the compass works normally and the aircraft will

record the home point successfully. If the signal between the remote controller and the aircraft is interrupted or lost, the aircraft will hover until signal is regained. If the signal interruption lasts for over three seconds, the aircraft will return to home automatically. In returning, if the signal is back to normal, the returning will be stopped automatically and you can operate the aircraft again.

※ **When the GPS signal is not good enough, RTH will not work.**

Indicators of Aircraft Status

The flight status of the GDU Byrd could be judged from the two groups of LED indicator lights at the head and the end of the aircraft. Their locations are as shown in the following picture.

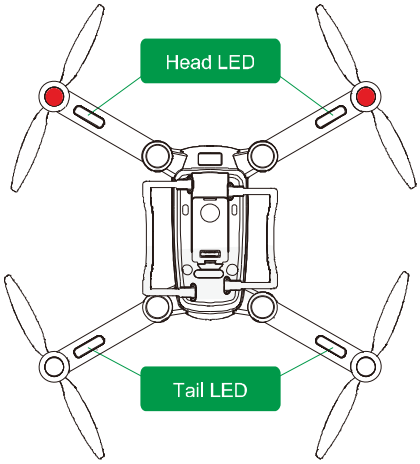

The two groups of LED indicator lights show the current status of the flight control system through different groups of colors and flickers. See the following table for more details.

	Status	Head LED	Tail LED
Normal State	GPS / Vision Positioning Mode	● Red light on	● Green light on
	Attitude mode	● Red light on	● Yellow light on
	Smart Return-to-Home	● Red light on	● Blue light on
Compss Calibration	Horizontally Rotate	● Yellow light on	○ Yellow light blinks
	Vertically Rotate	● Yellow light on	○ Green light blinks
	Calibration Success	● Yellow light on	● Green light on
	Overlarge Compass Offset, Plesase Recalibrate	● Yellow light on	● Yellow light on
	Calibration Failure or IMU Failure	● Red light on	● Red light on
Abnormal State	Low Battery Level	● Red light on	○ Green light blinks (P mode)
	Critical Low Battery Level	○ Red light blinks	○ Yellow light blinks (A mode)
	Remote Controller's Signal Lost	○ Red light blinks	○ Red light blinks

Vision Positioning System

This positioning system consists of the visible light camera and the ultrasonic module. The former is used to obtain the position information of the flight to provide reference for the horizontal direction of the aircraft. And the latter will judge the current flight height to provide reference for the height from the ground to maintain the flight at a certain height.

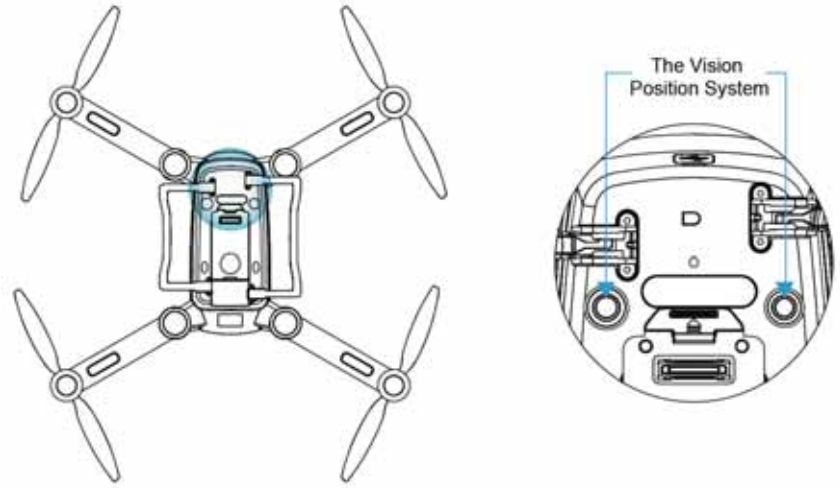

This system is apply to the environment in which the height is lower than 6 meters, where there is no GPS signal or the GPS signal is not so good. It is particularly suitable for indoor flight.

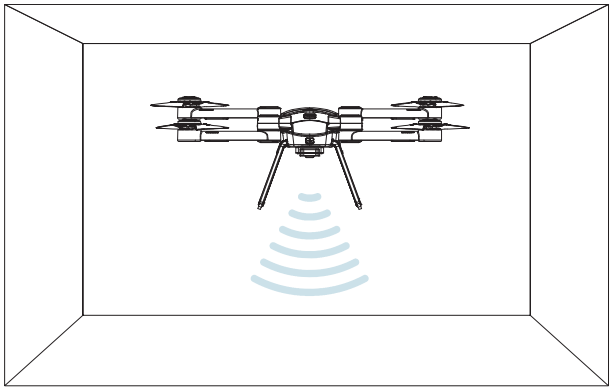

The precision of the visual and acoustic system can be affected by the illumination intensity and the surface texture of articles. And the ultrasonic will not measure the distance in certain damping materials. If both vision and ultrasonic do not work, the flight mode will be turned into the Attitude mode automatically. Therefore, please notice the following conditions during flight:

- The normal flight height of this system ranges from 0.2m to 6m. Please stay in this range when the aircraft is used indoor;
- The illumination condition is 10 lux–100000 lux;
- Within the required range of the illumination conditions, all textures could be used to position the flight except pure colors (such as pure black, pure red, pure white and pure green);
- Be cautious on the surface where there is intensive reflected light or inverted images;
- The flight speed should not be too fast and the highest speed should not exceed 8m/s(17mph).
- The maximum flight inclination should not be more than 30°.
- The range of flight temperature is -10℃-55℃(14 F to 131 F).
- The flight altitude should not be more than 4000 meters (13,000 feet).

※ **In Mode P and when the GPS signal is lost or not good enough, the system will turn to the visual and acoustic positioning mode and no manual operation is needed.**

※ **This system is only open to GDU Byrd Advanced/Premium version.**

Stowage Dropping

GDU Byrd could load with less than 500g loads (not including the gimbal and the camera) to deliver objects from a long distance.

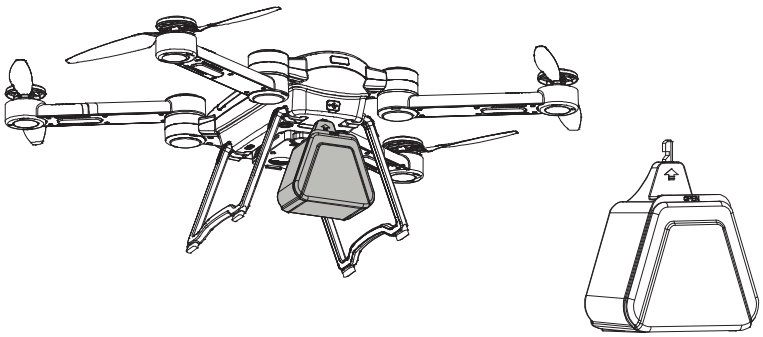

Before the ejection, the buttons C1 and C2 should be customized to choose the ‘steering gear control’ in the APP setting interface. The objects to be ejected are to be put into the container

carrier and the container is inserted into the steering gear hole. Operate the aircraft to the place above the ejection point and press C1 or C2 button to let the container break away from the aircraft. The ejection is finished.

※ **This system is only open to GDU Byrd Premium version.**

Remote Controller

The remote controller is an advanced wireless communication system that uses automatic frequency hopping to maintain the best connection between the RC and the aircraft. It allows several aircraft to work at the same time within the same airspace.

The integrated wireless high-definition video transmission system within the controller is connected to the ProFlight App via USB cable. This way, you can watch the real time video in your personal mobile device (mobile phone or tablet). All parameters of the aircraft can also be fully shown on the screen of your mobile device.

① Mobile Device Holder
② Antenna
③ Control Sticks
④ Take Off Button
⑤ Power Button&RC Battery Indicator
⑥ Gimbal Position Reset Button
⑦ Video Recording Buttons
⑧ Gimbal Dialfor Pitching
⑨ Customizable button C2
⑩ Handle Bar
⑪ Lanyard Hole
⑫ Return to Home Button
⑬ Battery Level Indicators of the Aircraft
⑭ Remote Controller Status LED
⑮ Micro-USB Prot&Charging Port
⑯ Equipment Support Lock
⑰ Flight Mode Switch
⑱ Shutter Button
⑲ Gimbal Dial for Yawing
⑳ Customizable Button C1
㉑ USB Port

Dual Remote Controller

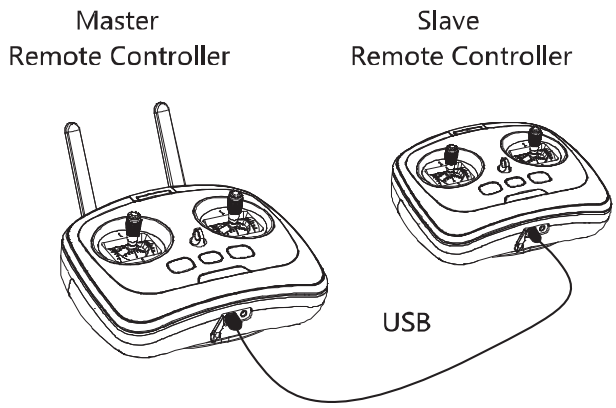

※ **The slave remote controller is not included with the GDU Byrd. Please visit *www.gdu-tech.com* to buy it by yourself.**

HD Video Downlink System

GDU Byrd series products are equipped with a high definition image transmission module which consists of a transmitter (on the aircraft) and a receiver (on the RC). It is used for real-time transmitting 1080P video at 50 frames per second (P mode). The high-def image transmission module in GDU Byrd Standard adopts common WIFI system and the transmitting distance is 500 meters (1640ft). This image transmission of high definition module in GDU Byrd Advanced/Premium adopts OFDM system and the transmitting distance is 2500 meters (8202 ft).

Gimbal Control

The control dial wheels for the gimbal yaw and pitch could control the yaw and pitch. The Back-to-center button of the gimbal could let the gimbal return to the initialization place.

※ **The type of the gimbal in the above picture is only for indication. Different types of gimbals are used for different aircrafts with different configurations.**

Aircraft Operation

The remote controller supports three operation modes: American customization (Mode 1), Japanese customization and Chinese customization. Definitions of the control sticks of the three modes are as follows:

1. American Customization: throttle and yaw on left stick and pitch and roll on right stick.

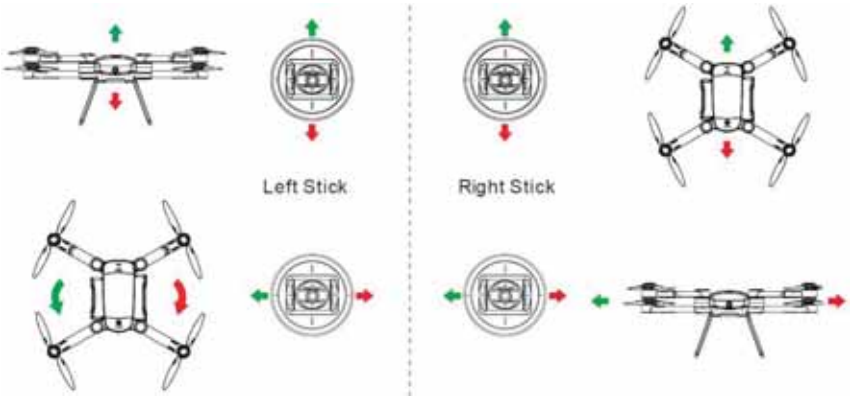

2. Japanese Customization: pitch and yaw for left hand and throttle and roll for right hand

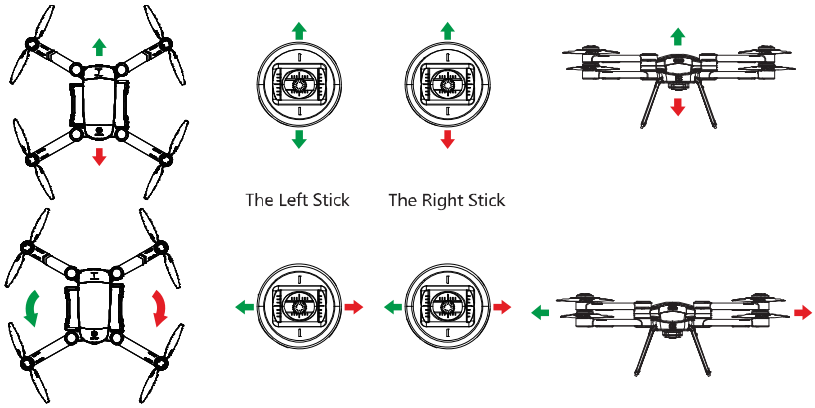

3. Chinese Customization: pitch and roll for left hand and throttle and yaw for right hand

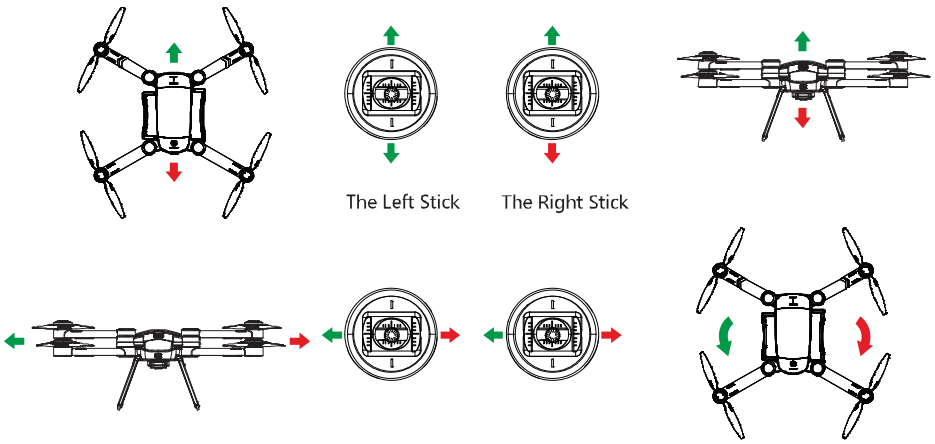

The default operation mode of the remote controller is the ‘American customization (Mode 1)’. You can change the mode by the parameter adjustment software or in the ‘Control setting’ interface of the APP. (See APP control setting for more details.)

Link

When the remote controller is delivered, the remote controller has been bound to the aircraft at the factory and can be used immediately. If the aircraft or the remote controller is replaced, then follow these steps to bind the units together:

1. Turn on the powers of the aircraft.

2. Press and hold the ‘Return to home button’ in the remote controller and then press the ‘the power switch’ button in the remote controller. At this moment, the remote controller gives a warning tone, the red LED indicator light is on, and the four indicator lights of the power of the aircraft in the remote controller flicker sequentially.

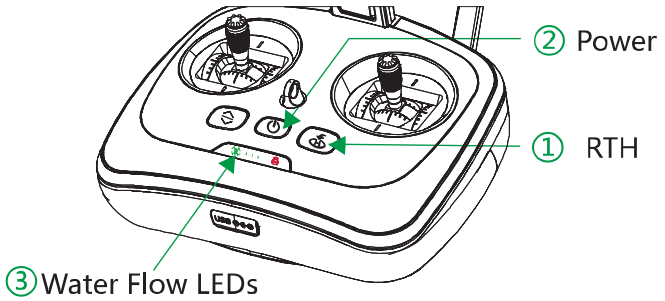

3. Press the power button of the aircraft for five times and wait for several seconds for the binding procedure to finish. At this time, the green LED indicator light showing the status of the remote controller is on.

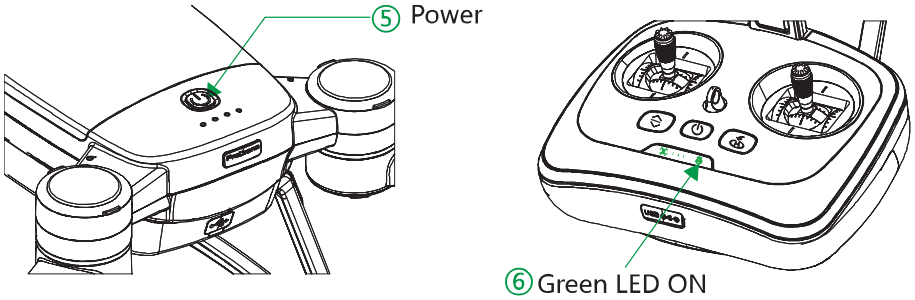

Gimbal

There are a total of four types of gimbals for GDU Byrd Premium 2.0 aircraft, and completely new integrated control algorithm is applied to them, making the high definition three-axle stabilization gimbal. The jittering of the angel is ±0.05 allowing for stabilized video and photos.

According to the design philosophy of GDU Byrd series, the unmanned aircraft consists of the platform and the load mission. Three types of gimbals could be used in any type of platform.

Byrd-001 Gimbal

Byrd-001 multi-function gimbal (without camera) is designed for GoPro camera. Byrd-001 Gimbal can realize the controllable two-axle of pitch and yaw, providing you broader shooting angels.

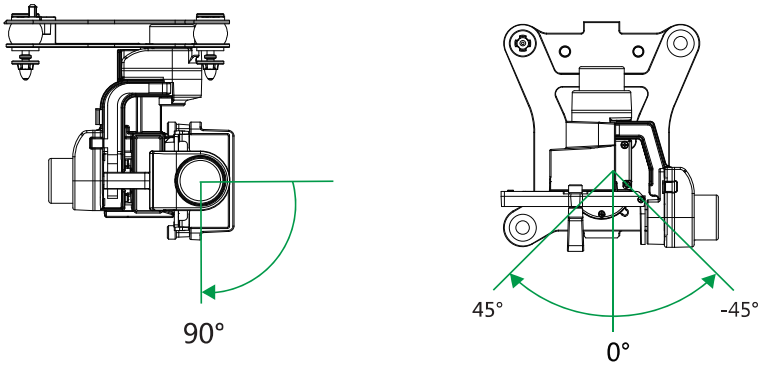

Byrd-002 Gimbal

Byrd-002 is an integrated camera gimbal. The independently developed 1080P high-definition sports camera is carried on this gimbal, which could record and shoot 1080P videos and 16 mega-pixel photos. Besides, the camera and the gimbal are connected together and cannot be separated.

What's more, Byrd-002 Gimbal can realize the controllable two-axle of pitch and yaw, providing you broader shooting angels.

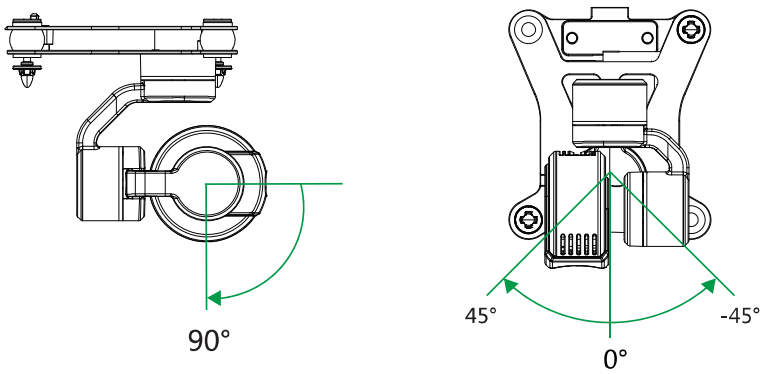

Byrd-003 Gimbal

The standard configuration of GDU Byrd Standard is equipped with the Byrd-003 integrated camera gimbal. The independently developed 4K high definition sports camera is carried on this gimbal. And it could record and shoot 4K high definition videos and 12 mega-pixel photos. Besides, the camera and the gimbal are connected together and cannot be separated.

What's more, Byrd-003 Gimbal can realize the controllable two-axle of pitch and yaw, providing you broader shooting angels.

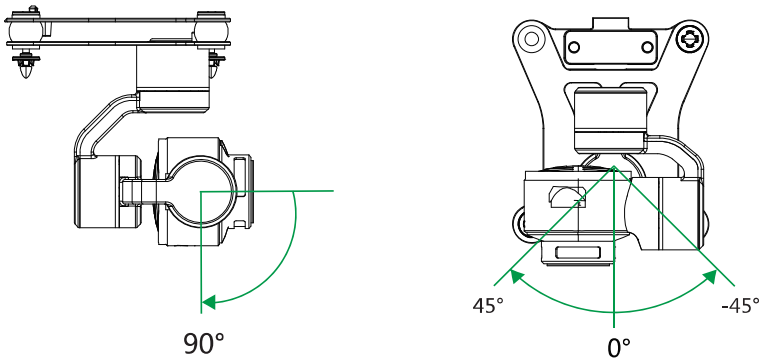

Byrd-004 Gimbal

GDU Byrd can also equipped with the Byrd-004 multi-function camera gimbal. The independently developed infrared camera is carried on this gimbal. And it could record and shoot 640*480 pixels videos and photos. Beside, the infrared camera can takes apart from the gimbal to be used alone.

What's more, Byrd-004 Gimbal can realize the controllable two-axle of pitch and yaw, providing you broader shooting angels.

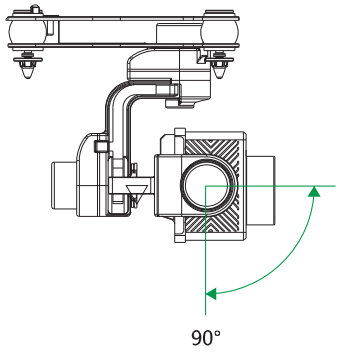
90°

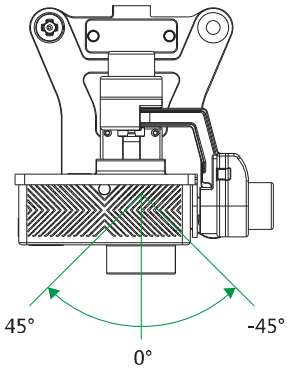
45°
0°
-45°

ProFlight App

FCS Firmware Version Update

The GDU development team will continuously improve and update the firmware in the flight control system. You need to download and install the 'Update tool of the firmware in the flight control system' on your own to update the firmware. The steps of using the software are as follows:

1. Visit www.gdu-tech.com to download and install the latest firmware version in PC device.
2. Unzip the firmware file, finding and installing the drive that matching with your computer system.

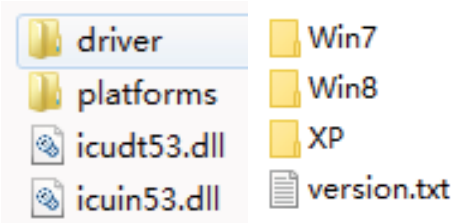

3. After the drive installation, run the 'Updatetool.exe' under the installation directory to open the software.

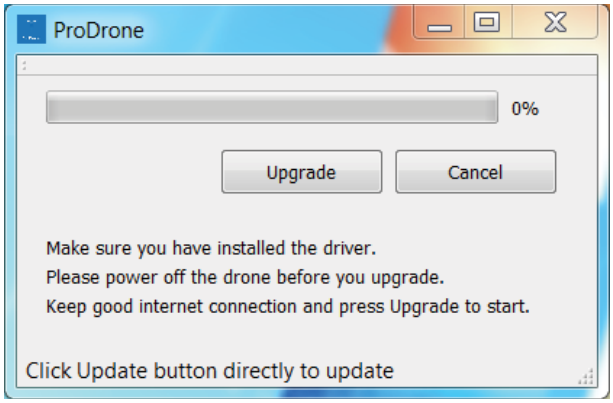

4. Stay connected to the internet and click the auto update button, the software will download the related firmware version automatically.

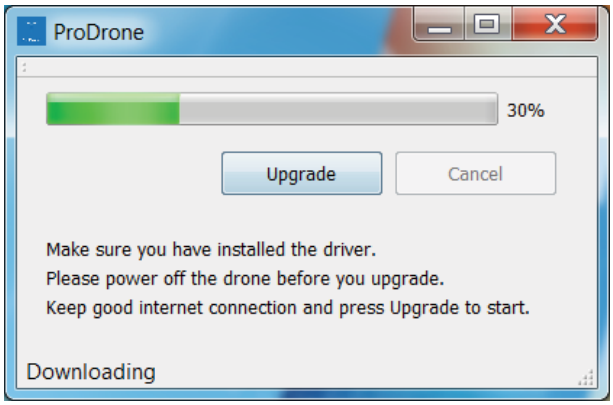

5. Follow the prompt, making sure your aircraft power is shut down, and connecting the aircraft parameter adjustment port and PC with USB.

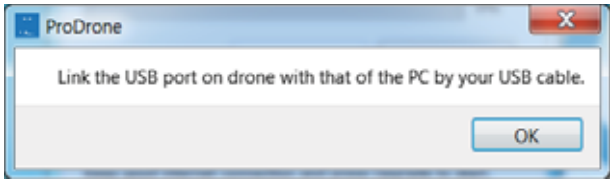

6. Confirm and start updating.

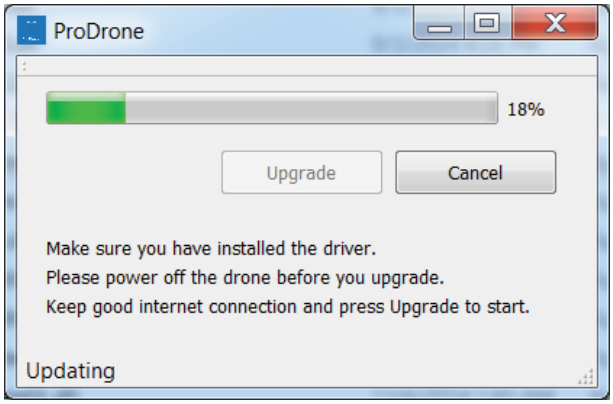

7. Update successfully, and close the software.

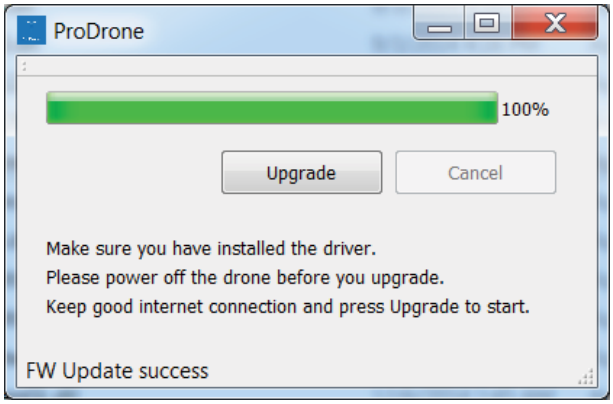

※ **Make sure the power of the aircraft is turned off when connecting the 'FCS Firmware Download and Update Tool'.**

※ **The 'FCS Firmware Download and Update Tool' could only be used at the PC device.**

ProFlight App

ProFlight APP is an interactive software specially designed for GDU Byrd series aircraft. With this software, you can control the aircraft, the gimbal, the camera to take pictures, record videos, eject objects, and set parameters of the aircraft. To coordinate with the image transmission of high definition, it is suggested to use on a tablet or mobile phones with large screens to get the best visual experience.

With rhythmic starting music and active animation, you will enter the Homepage of ProFlight APP. The three function icons in the Homepage are Replay of pictures, Flight interface, and Help profile.

1. Playback

Click the left upside icon. It will enter the playback interface. You could browse pictures and videos photographed before, and share the pictures to dominant social network.

2. Help

Click the letf icon belown. It will enter the Help interface. If your mobile device is connected to the internet, you could browse all instruction profiles and tutorial videos, which could effectively help you to use this product.

3. Flight Page

Click the right icon. It will enter the Flight Page. In normal conditions, the image transmitted from the aircraft will be shown in this Page.

• Flight Status Bar

: Show quantities of searched satellites;