80%: Show strength of WIFI signal of the remote controller;

90%: Show the remained electricity quantity of the aircraft;

90%: Show the remained electricity quantity of the remote controller;

ALT: N/A: Show the current flight height;

P-GPS: Show the current flight mode;

DIS: N/A: Show the current flight distance.

• Return to Homepage

Click the icon and it will return to Homepage of APP.

• Map Page

Click the icon and it will open the map.

[1] Take Off

Click the icon and it will take off automatically.

[2] Return to Home

Click the icon and it will activate the RTH.

[3] Positioning

Click the icon, the position of the aircraft will be shown in the center of the screen.

[4] Delete the Flight Points

Click the icon and it will erase the flight points.

[5] Flight Planning

After clicking the icon, its background will turn to red, which means the function of planning the flight path has been activated. At this time, you can click anywhere on the map to form the flight dot. When the dots are confirmed, click the 'GO' at the bottom of the screen, the aircraft will fly to these dots according to their order.

[6] Compass Display

Click the icon to lock the direction of the map, the red arrow pointed to the north.

[7] Map Display

Click the icon to change the display mode of the map between 2D version and the real version.

• System Setting

Click the icon and it will enter the interface of the system setting, which includes three pages of control setting, camera setting and general setting.

[1] Control Mode

Three operation modes could be chosen: Japanese customization, American customization and Chinese customization.

[2] Customizable Buttons

Two buttons at the back of the remote controller can be customized. The buttons can be

customized for five functions: taking pictures, recording videos, back-to-center of the gimbal, steering gear control and take off. (Need the connection with the Remote Controller)
To the right page, you can enter the ‘Flight Settings’.

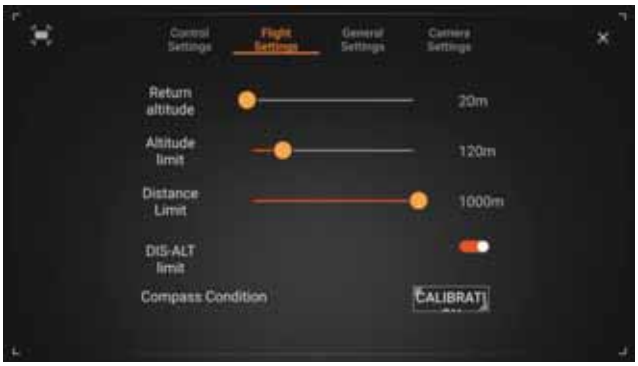

In this page, settings could be made for the Return Height, Altitude Limit, and Distance Limit. We strongly suggest you to set the altitude limit below 120m, although the maximum value allowed is 500m. If not, you will have to bear the risk.
Continue to the right page, you can enter the ‘General Settings’.

In this page, settings can be adjusted for units of the parameters, whether to show the grid, whether to show the flight track and whether to broadcast the sound effect. This is also where you can format the microSD card for the camera.

To the right page, you can enter the ‘Camera Settings’.

In this page, settings could be adjusted for the photo format, video format, whether to reserve local copies and the resolution ratio of the video. （Aircraft must be powered on!）.

• Take Off Button

The Take Off button can only be used in Mode P. In Mode P and after arming the unlocking, click the icon (or the button in the remote controller), and the aircraft will fly to 3 meters high from the ground and wait for your next command.

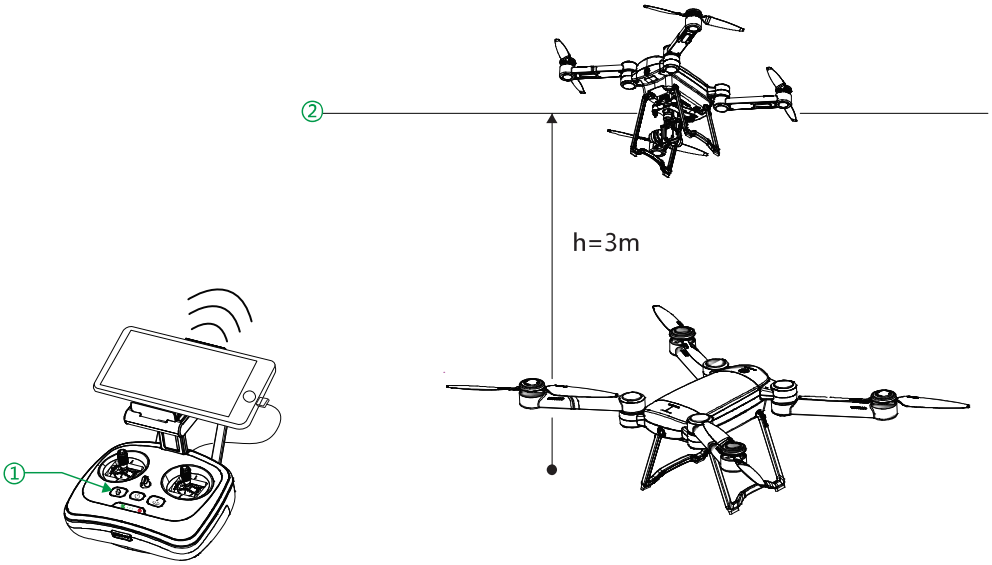

• Photograph/Video

（Photograph） （Video）

The icons of Taking pictures/ Recording videos on ProFlight App have the same functions with those on remote controller. Click the button to take pictures or record videos, and click it again to stop.

※ **The language in the APP interface is the same with that in the system of the mobile device. If you want to change the language, please first change that in the system.**

Assembling

Aircraft Preparation

1. Unfold

Unfold the arms and the food stools to the limited places shown in the picture. Make sure that all arms are symmetric with each other.

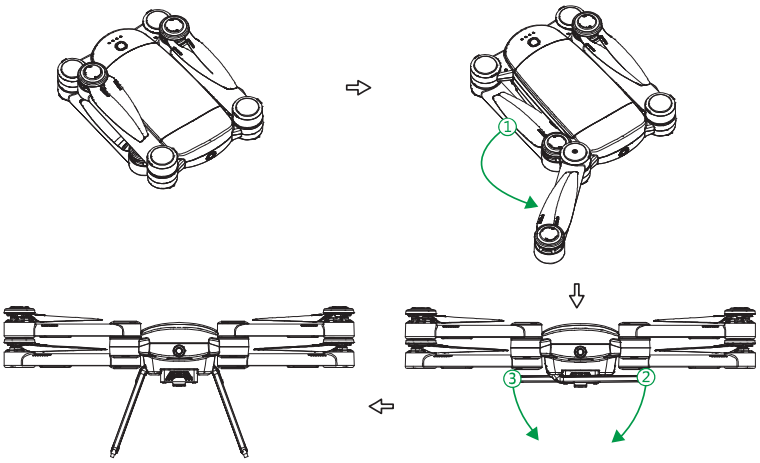

2. Fold

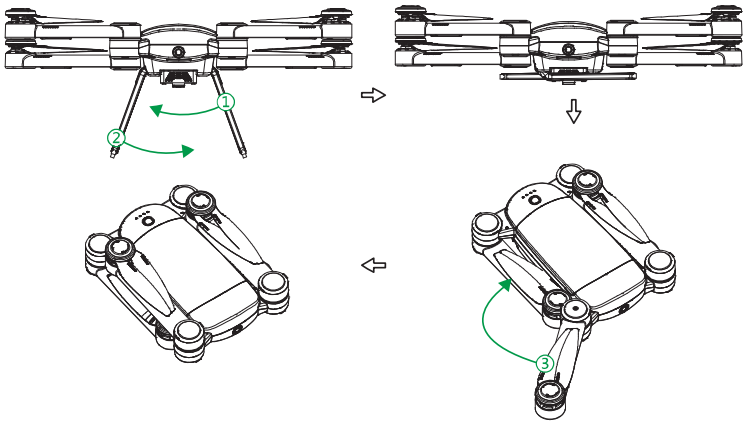

※ **In unfolding, please be careful rotating the arm and the stool. Stop unfolding after they are in the limited places.**

※ **In folding, please make sure the rotation is in the right direction. If it is in the wrong direction, the limit structure would be damaged.**

3. Propellers Installation and Dismounting

The GDU Byrd uses the foldable propellers. The propellers are marked A or B. Propellers A rotate in the opposite direction of Propellers B.

Propellers	Type A	Type B
Program		
Install location	Fixe on the motors rotate in clockwise.	Fixe on the motors rotate in counter-clockwise
Symbol Explanation	Lock: Turn the propellers in the indicated direction to mount and tighten Unlock: Turn the propellers in the indicated direction to loosen and remove	

Letters A and B are marked respectively on the hub of the propeller, in the internal surface of the propeller cap, and the motor rotor. Make sure signs of the three are the same in the installation and dismounting.

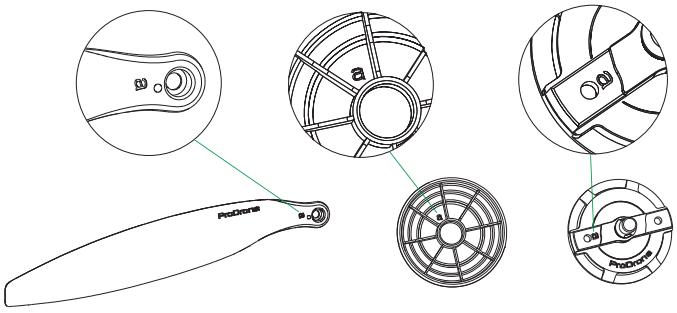

In installation, choose the same type of propeller with that on the motor rotor. Put the side with the letter up and insert it to the spacer pin of the propeller in the electric motor. Press the performing of the propeller to the card slot of the motor spindle in the direction vertical to the spacer pin. Rotate the performing for 90° to align the hole sides at two ends with the spacer pin and press it in. In the end, rotate the propeller cap according to the direction shown in the cap.

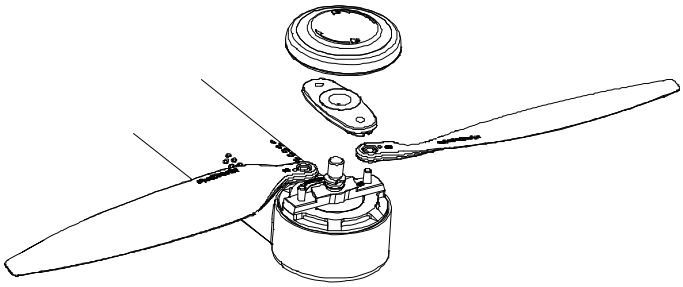

To remove, take down the propeller cap according to the direction shown in the cap. Lift the propeller cap up slightly and rotate it for 90° to take down the performing. In the end, take down the propeller.

• Anti-Shooting Propellers

The anti-shooting propeller serves as the second security assurance besides the self-locking design of the propeller cap. Even if the cap falls off in flight, this mechanism will prevent the propeller from being ejected out. The card slot in the performing coordinates with that in the motor spindle. Only when the performing is rotated to certain angel, it could be taken down from the spindle.

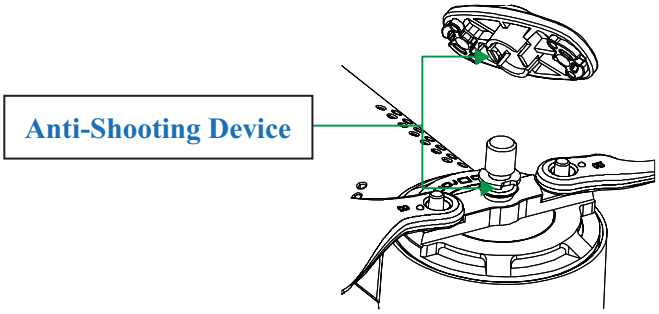

4. Battery Installation and Dismounting

A high capacity Li-polymer battery, whose capacity is 6700mAh and voltage is 14.8 V, is used in this aircraft. The snap joint design is used here and you can snap the battery into the battery cabin in the direction shown in the following picture. After installation, tighten the cover of the battery cabin according to the method shown in the following picture.

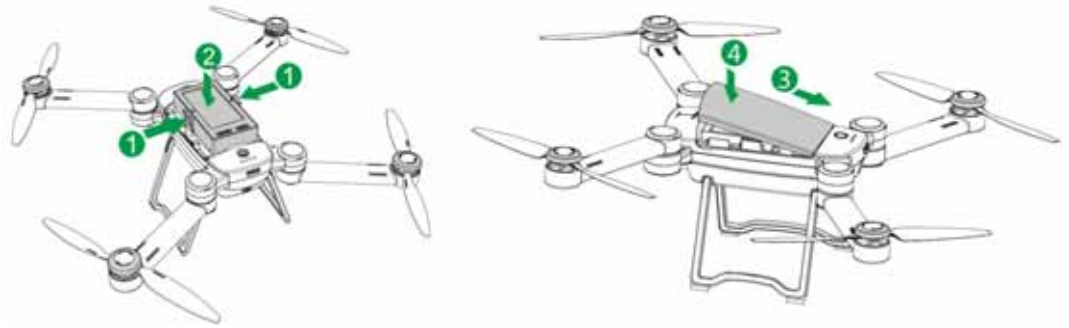

After flight, please take down the battery according to the method shown in the following picture. Take down the cover and press the snap joints at two sides of the battery at the same time. You can dismount the battery.

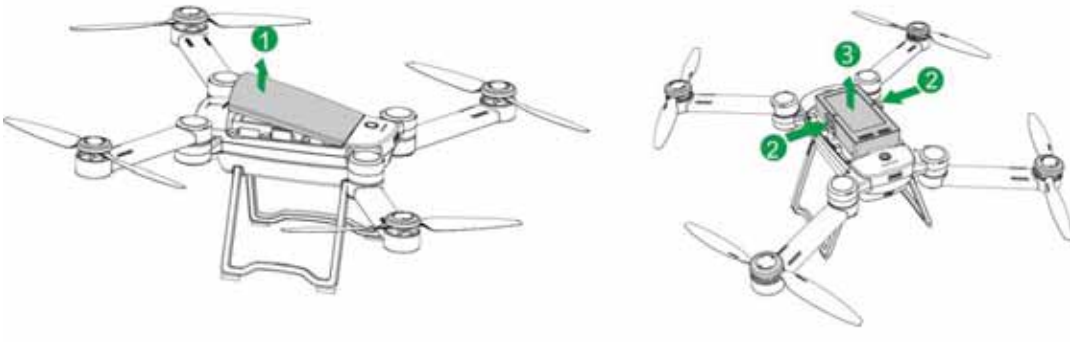

※ **ALWAYS POWER OFF THE AIRCRAFT BEFORE REMOVING THE BATTERY!**

※ **The battery contains the dangerous chemical. Please read the *Battery Safety Guidelines* printed on the surface of the battery carefully before using the aircraft.**

5. Gimbal Installation

Insert, with a diagonal angle, the plug of the butt strap of the gimbal into the card slot at the bottom of the aircraft. Pull to open the snap joint of the spring at the bottom of the aircraft. Press the other end of the gimbal into the snap joint to connect the gimbal and the bottom surface of the aircraft. Unclamp the snap joint to check whether the gimbal has been fixedly installed.

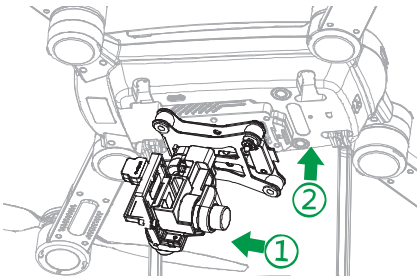

※ **The type of the gimbal in the above picture is only for indication. Different types of gimbals are used for different aircrafts with different configurations.**

※ **The gimbal is precise equipment and its performance would be reduced by crash or strong force. Therefore, please pay special attention to the gimbal.**

※ **Do not move the aircraft while the gimbal is on self-checking.**

※ **Before installing and dismounting, please turn off the power of the aircraft. It is forbidden to install or dismount the gimbal with the power on.**

6. Dropping Box Installation and Dismounting

There is a plug at the top of the container. Insert it to the steering gear hole at the bottom of the end of the aircraft and the installation is finished.

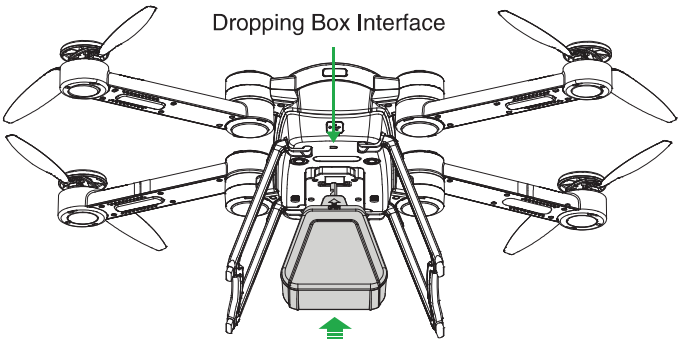

In dismounting, the powers of the aircraft and the remote controller should be turned on. And then the ejection would be carried out and the container would break away from the aircraft.

7. ON/OFF

Press the power switch of the aircraft for three seconds, and it will be turned on. Repeat this operation and the aircraft will be turned off.

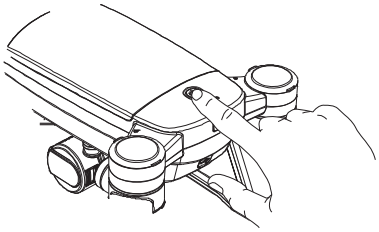

8. Aircraft Battery Check

There are two methods to examine the battery capacity:

- After turning on the power switch of the aircraft, you can see the remaining battery capacity by observing the LED indicator lights.

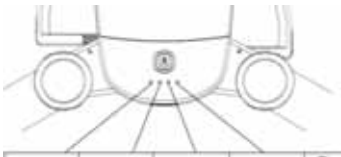

LED1	LED2	LED3	LED4	Current battery level
•Green	•Green	•Green	•Green	75%~100%
•Green	•Green	•Green	○OFF	50%~75%
•Green	•Green	○OFF	○OFF	25%~50%
•Red	○OFF	○OFF	○OFF	0%~25%

• After turning on the power switches of the aircraft and the remote controller, you could see the remaining capacity by observing the LED indicator lights for the aircraft in the remote controller.

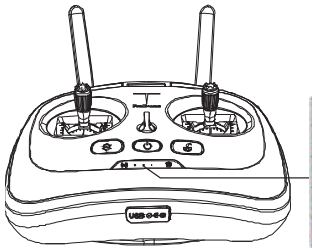

LED1	LED2	LED3	LED4	Current battery level
•Green	•Green	•Green	•Green	75%~100%
•Green	•Green	•Green	○OFF	50%~75%
•Green	•Green	○OFF	○OFF	25%~50%
•Red	○OFF	○OFF	○OFF	0%~25%

9. Charging

The flight battery cannot be charged while in the aircraft. Please remove it from the aircraft and charge it with the included charger. It takes about 2.5 hours to finish the charging.

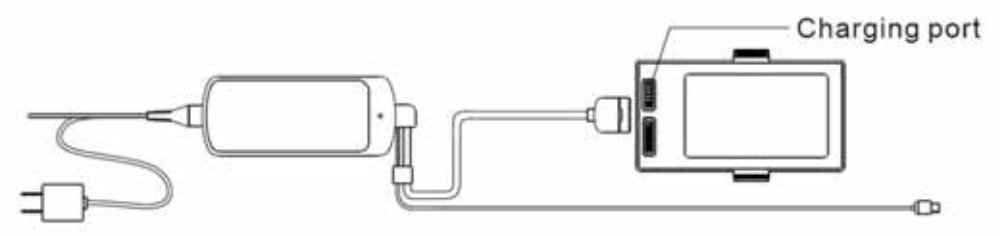

While charging, the LED indicator light in the charger is red. When the light turns solid green, it means the battery has been fully charged. Please disconnect the charger after the battery is fully charged.

※ **Make sure to use the original charger to charge the battery and the remote controller. GDU will assumes no responsibilities if faults or damages are caused by not using the original accessories.**

※ **If the type of the charger plug does not match with that of the power plug, please visit the official store to buy the same type of the power line before trying to charge.**

Remote Controller Preparation

1. ON/OFF

Press the power switch of the remote controller for three seconds, and it will be turned on. Repeat this operation and the remote controller will be turned off.

2. Battery Check

The battery capacity of the remote controller is shown through the color of the back light of the

power switch. If it is green, it means the battery capacity is enough for the flight; if it is red, it means the battery needs to be charged.

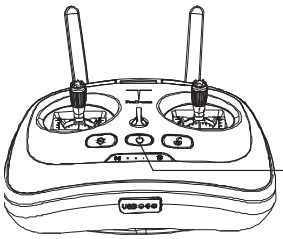

Indicator status	Current battery level
● Green light on	40%~100%
◉ Green light on	15%~40%
● Red light on	0%~15%

3. Charging

The remote controller could be charged no matter it is on or off, but it is suggested to charge it when it is off.

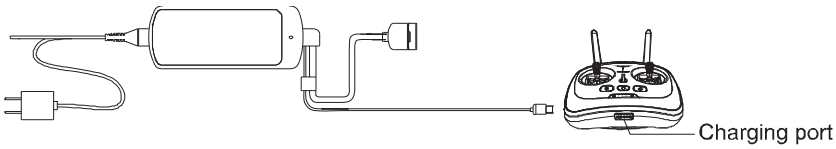

In charging, you could judge whether it has been fully charged by the color of the LED indicator light of its electric quantity. If the red light flickers, it means it is being charged. If the green light flickers, it means it has been fully charged. It needs about five hours to finish the charging and the remote controller could be used for about two weeks.

※ **Make sure to use the original charger to charge the battery and the remote controller. GDU assumes no responsibilities if faults and damages are caused by not using the original accessories.**

※ **If the type of the charger plug does not match with that of the power plug, please visit the official store to buy the same type of the power line before trying to charge.**

4. Antenna Placement

Please hold the antenna in the direction shown in the following picture.

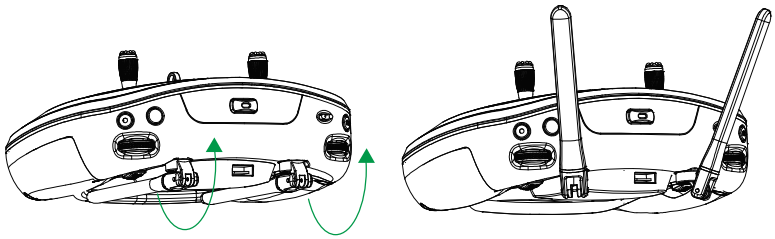

The remote controller will receive signals of different strengths if the antenna is placed in different positions. In flight, the direction of the antenna needs to be changed to keep the aircraft within communication range.

※ **When using the remote controller, please keep it away from the human body (especially the head) for at least 8 inches in case that the antenna and the transmitter module might influence the body.**

5. Mobile Device Holder Installation and Dismounting

Unfold the joint lever of the support of the mobile device to the limited position and insert it downward to the installation hole and adjust fit the device being used.

Start up the WLAN of the mobile device. And search and connect the WiFi pot of the remote controller. See the information on the label at the back of the remote controller for the pot name and its passwords.

To remove, press down the 'Equipment support lock' and pull the support upward.

※ **Before searching for the Wi-Fi pot, please turn on the remote controller and the aircraft. Otherwise, the mobile device will not show the Wi-Fi spot.**

Flight

Safety Alarms

1. Environment

- Do not fly in sever whether such as rain, thunder, high wind, snow, heavy fog, and the sand and dust weather.
- Do not fly between tall buildings. Doing so may lead to disabling of the GPS and affecting flight characteristics. Please fly in wide open spaces with no buildings or other tall obstacles.
- Always keep the aircraft in direct line of sight and avoid flying over people and water.
- Do not fly in places where there are communication base stations of high-tension cable or launch towers to avoid the interference of the signals from the remote controller.
- Please visit the FAA.gov website and read “Know Before Your Fly”. This tells you all of the current hobby flying rules in the US. For example, do not fly above 400 feet in altitude.
- DO NOT FLY NEAR AIRPORTS, HELIPORTS or HOSPITALS.

2. CAUTION

- Do not answer the telephone or make telephone calls while flying the aircraft. Pay close attention to the display of the APP interface to ensure safe flight.
- Return to base and land as soon as possible when the low battery warning sounds;
- The aircraft will land automatically when the battery reaches critical low voltage. The pilot can guide the aircraft to a safe landing place though;
- Turn the aircraft off upon landing and before removing the battery.
- In case of an emergency during flight, please use the Return to Home button. DO NOT power off the motors during flight as the aircraft will come crashing to the ground causing damage and possible bodily injury.
- The propellers spin at a high rate of speed and can cause serious bodily injury. Please maintain a safe distance from the spinning motors during operation.

Pre-Check

- Check all parts of the aircraft before each flight. Look for cracks in the propellers, cracks in the arms and make sure that the motors spin freely. If there is any damage, please repair/replace before trying to fly the aircraft.
- Make sure the flight battery is fully charged and that the remote control has a good charge before attempting to fly the aircraft.
- Make sure the arms and landing legs are in their proper places and that the propellers are properly installed.
- Check whether the connection between the remote controller and the aircraft is normal.
- Always operate with the latest firmware. And check whether the APP and the remote controller are connected normally.
- Check whether the electric motor and the gimbal are working properly after the aircraft is powered on.
- Make sure that the SD card has been inserted into the camera.

Accelerator Calibration

When the aircraft leaves the factory, the accelerometer has already been calibrated. It is suggested to calibrate it again before the first flight to ensure the safe flight Follow these steps:

- Visit www.gdu-tech.com to download and install the 'FCS Configuration Adjustion Software' on your PC.
- Connect the aircraft to your PC, the software will automatically identify the aircraft.
- Make sure the aircraft is sitting on a level surface and POWERED OFF, then open the 'Accelerometer' in the parameter adjustment software, Then click the button that says 'Click to start the single axis calibration'.
- Wait for three seconds and the calibration is finished.

※ **Make sure the aircraft has been turned off before it is connected to the PC.**

Compass Calibration

- Power on the remote control and then the aircraft. At this time, the aircraft will start a self-check and a series of beeps will sound.

- After the beep stops, toggle the "Flight Mode Switch" back and forth for several times. Observe the color of the LED indicator light in the aircraft and stop toggling when the yellow LED indicator light at the head of the aircraft is on and the yellow light at the tail flashes.

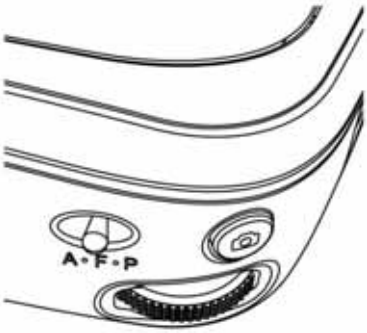

- Hold the aircraft **UPSIDE DOWN** and rotate it clock-wisely and horizontally. Observe the color of the LED indicator light in the aircraft and go to the next step when the yellow light at the head of the aircraft is on and the green light at the tail flashes. Otherwise, please return to the step 2.

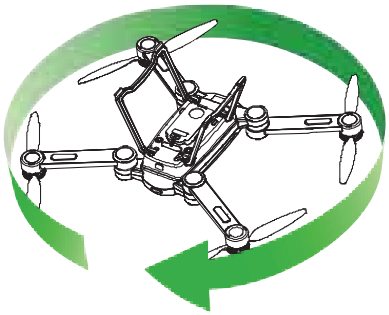

- Hold the aircraft with its **HEAD DOWN** and rotate it clock-wisely and vertically. Observe the

color of the LED indicator light in the aircraft; the compass calibration is successful when the YELLOW lights at the head of the aircraft and the GREEN lights at the tail keep on. The compass calibration is not so good when all the yellow light keep on. You'd better calibrate the compass once more. Otherwise, please return to the step 2.

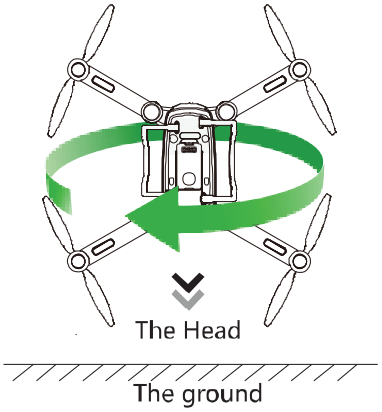

※ **Do not move the aircraft during the self-check startup.**

※ **When the aircraft is used for the first time or it is moved to a new location since the last calibration, please calibrate the compass.**

※ **When severe drifting occurs in flight or it couldn't fly in straight line, please calibrate the compass.**

※ **Do not calibrate the compass indoor, or near large metal objects, or in the place where there may be high magnetic fields.**

※ **When calibrating the compass, do not carry the mobile phone, hand-watch, keys and other metal objects.**

Take Off

You can rise the aircraft by auto take-off or manual take-off. After compass calibration, push both control sticks to bottom inner corners to start the motors. Once the motors have started spinning, release both control sticks simultaneously. When the GPS signal is not so good, P mode could not unlock the motors. Please change to other wide-open spaces or turn to A mode at this time. When unlocked, push the throttle up slowly, the aircraft will take-off.

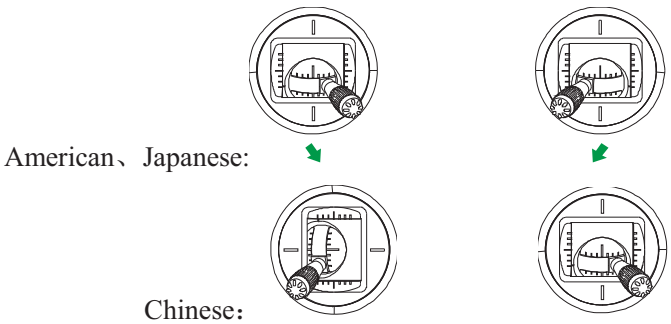

※ **Before the flight, please put the head of the aircraft forward and keep over 10 feet away from the aircraft.**

※ **Do not unlock the aircraft on steep slopes or hillsides.**

Landing

During the flight, push the throttle rod downward slowly and the aircraft will land slowly. At this time, push the rod to its lowest place and hold for two seconds. The motor will stop and then loosen the rod to lock the aircraft.

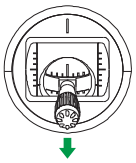

FAQ

1. What is the control distance of the remote controller? How are the aircraft, the mobile phone and the remote controller are connected?

The control distance of the remote controller is 2500 meters (the actual control distance depends on the environment). The mobile device and the remote controller are connected via USB cable and the aircraft and the remote controller communicate with each other by 5.8 G radio frequency.

2. What are the endurance, capacity and type of the battery?

The average flight time is 29min. the equipped battery is a 6700mA, and 14.8 V Li battery.

3. What is the resolution of the camera? (Can it be replaced by other cameras?)

It could equipped with the four different type cameras. The Standard model comes with a 1080P integrated cameral gimbal and the camera cannot be replaced.

4. What is the maximum load of the aircraft?

The maximum load of the aircraft is 1200g and the flight time will be reduced if it is flown with this load.

5. Does is have the function of transmitting real-time image?

The aircraft is equipped with high definition image transmission module and can transmit high definition image in real time. The transmission distance is 2500m.

6. Could this camera take pictures or record videos at night?

There is the LED indicator light of status in the airplane arms, so the direction of the aircraft head could be judged correctly and it could fly at night. Whether the camera could take pictures or record videos at night is decided by the whether the camera supports this function or not.

7. What will happen if the aircraft is battery low in flight? What will happen if there is telephone call in flight? What will happen if the aircraft flies beyond the control range? What will happen if it flies so far that there is no image transmission and there are barriers? Does the aircraft have collision avoidance?

The aircraft will return to home automatically in the event of a low battery. When there is telephone call in flight, APP will operate in the background automatically and continue to work. However, it is not suggested to receive or make telephone calls. If the aircraft flown beyond the maximum control distance, then return to home be triggered. When if flies beyond the distance of transmitting images, please stop all operations and return to home. This product does NOT have a collision avoidance system and cannot automatically avoid barriers.

8. How to download ProFlight APP?

You can visit www.gdu-tech.com or scan the two-dimension code in the instruction profile to download ProFlight APP.

9. Whether it could take off in windows of high buildings or in comparatively narrow spaces? (Whether it only could take off in flat ground?)

Yes, it can. However, the signals might disappear in high buildings, which can be very dangerous. For safety, it is suggested to let only take off in an open place and keep it fly below the height of

400 feet.

10. The aircraft voice is loud during flight. Is that normal?

The noise of the aircraft's propellers has a direct relationship to the speed of the propellers.

11. What's the GPS precision of the map in the mobile phone?

The precision of the GPS on the map is determined by the quality of the GPS module in your mobile device.

12. How fast can the aircraft fly?

The fastest ascent speed is 6 m/s and the fastest forward speed is 15 m/s.

13. How dose APP control the aircraft?

The control instructions of the APP are transmitted to the remote controller by USB cable and to the aircraft by the remote controller. Please read the help profiles in the first page of APP or read the tutorial video in ProFlight APP.

14. What is the shooting time of the camera?

The camera relies on the battery loaded in the aircraft for power supply. Therefore, the shooting time is decided by the endurance of the aircraft and the memory capacity of the SD card.

15. Will there be a memory card in the products we buy?

There will be a 16G memory card included with the standard configuration of the Standard version and a 64G for the Premium version. Visit www.gdu-tech.com for more accessories.

16. What kind of motors are your products using?

The high-performance brushless motor which is developed especially for this product is used in the power system. Its service life could be as long as 40,000 hours. Each motor has undergone serious routine inspection and its performance is reliable and stable.

17. Why i could not unlock the aircraft?

Watch the status indicator light of the remote controller to check whether the connection between the remote controller and the aircraft is normal. The aircraft could not be unlocked if the magnetism check is unsuccessful, if there is interference of strong magnetic, if the GPS signal is not good enough, and if the GPS precision does not meet the requirements.

18. Will it show my place only if I turn on the WIFI and connect it to the internet?

Yes. The place of pilot is positioned by the GPS in the mobile phone and the place of the aircraft is positioned by the GPS loaded in the aircraft. The information of the two places are transmitted to the APP by the remote controller and are shown in the APP interface.

19. What is the material of the gimbal? And what is the control range of the pitch?

This aircraft is equipped with a three-axle high definition gimbal developed by GDU. It is made of light aluminum alloy. The three types of gimbals are two-axle controllable. Their controllable pitch range is -90°- 0° and their controllable yaw range is -45°- 45°.

20. What's the material of the body of the airplane? Is break-resistant?

The body of aircraft is made of compound materials of high strength. It has been testified that the aircraft still keeps comparatively integral structure when it falls from a several meters high place.

21. What are the meanings of the red full lines and blue dotted lines in the map in the APP

of the mobile phone?

The red full lines show the flight track while the blue dotted line show the flight lines made by the planning function of flight track.

22. How to charge the power battery?

Connect the battery and the charger and connect the charge with the 220 V power source to start the charging. When the LED indicator light in the charger is red, it means the battery is being charged; when the light is green, it means the battery has been fully charged.

23. What will the aircraft do if the mobile phone is power off?

If the mobile phone is power off, you only could not see the images sent by the image transmission, but the remote controller could control the aircraft normally.

24. Why there are tweet sounds after turning on the power for a short time? Is it normal?

After turning on the power and there is no instruction for a long time, there will be tweet sounds. This is normal and will happen in 12 minutes after turning on the power.

Specifications

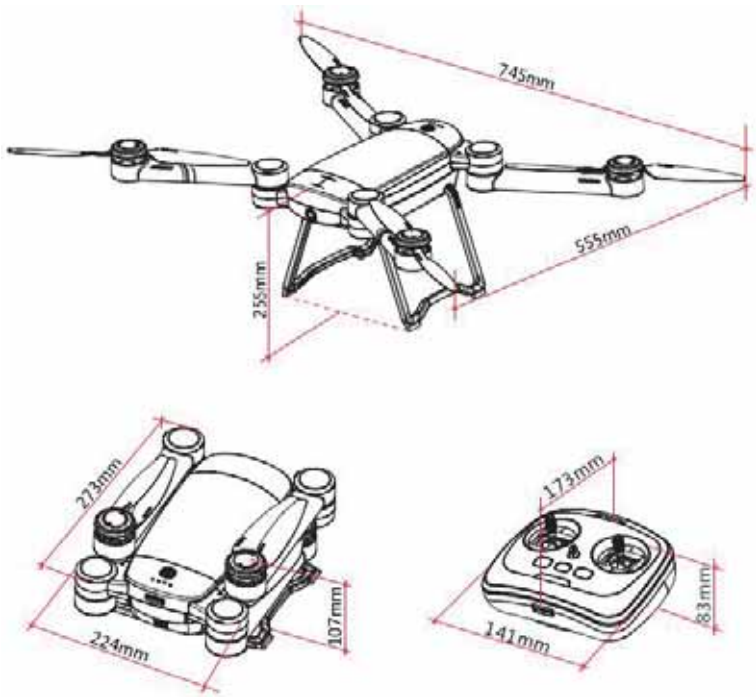

GDU Byrd Premium2.0

● Aircraft

Weight	1930 g
Rated Load	200 g
Max. Load	500 g
Wind Resistance	3 Grade
Max. Ascent Speed	6 m/s
Max. Speed	15m/s
Hover Precision（P Mode）	±0.2 m（Vertical） ±0.2 m（Horizontal）
Max. Flight Altitude	4000 m
Endurance	29 min
Operating Temperature	-10℃ to 50℃

● **Gimbal**

Controllable Angle Range	Pitching：-90° to 0° Yawing：-45° to 45°

● **Vision Positioning System**

Velocity Range	< 8 m/s
Altitude Range	20 cm – 600 cm
Positioning Accuracy	±3.0 cm（Horizontal） ±2.54 cm（Vertical）
Operating Environment	Surface with clear pattern and Adequate lighting

● **Camera**

Image Resolution	4K（16：9）, 2.7K（16：9）, 1440P（4：3）, 1080P（16：9）
Effective Pixel	12million
Video Format	.MP4（H.264 codec）and .AVI
Picture Format	.JPEG & .RAW
Burst Shooting	30 pieces/s（12 million）
Aperture	F/2.8
Frame Rate	4K：24/25/30 fps 2.7K：25/50/60 fps 1440P：25/50 fps 1080P：25/30/50/60/120 fps
Field Angle	104°（Opposite） 82°（Horizontal）
Distortion	<27%
Output Mode	USB
RAM	2GB flash + 8GB DDR
Supported SD Card Types	Support Maximum 64GB
Operation Temperature	-10℃ to 50℃

● **Remote Controller**

Frequency	5745 MHz ~ 5810 MHz
Max. Communication Distance	2500m
Battery Voltage	7.4V
Battery Capacity	5000mAh（2S）
Mobile Device Holder	Support Pad & Mobile Phone
Equivalent Isotropically Radiated Power（EIRP）	18mW
Operating Temperature	-10℃ to 50℃

● **Charger**

Voltage/Current	16.8V / 2.5A（Battery） 16.8V / 1A（Remote Controller）
Rated Power	67.2 W

● **Battery**

Capacity	6700 mAh
Voltage	14.8 V
Energy	99.16 Wh
Weight	560 g
Operating Temperature	0℃ to 40℃

FCC Compliance

FCC Compliance

This device complies with part 15 of the FCC Rules. Operation is subject to the following two conditions:

(1)This device may not cause harmful interference, and

(2)This device must accept any interference received, including interference that may cause undesired operation.

Changes or modifications not expressly approved by the party responsible for compliance could void the user's authority to operate the equipment.

FCC Radiation Exposure Statement:

Aircraft

This equipment complies with FCC radiation exposure limits set forth for an uncontrolled environment. This equipment should be installed and operated with minimum distance 20cm between the radiator and your body. This transmitter must not be co-located or operating in conjunction with any other antenna or transmitter.

Remoter

This equipment complies with FCC radiation exposure limits set forth for an uncontrolled environment.This equipment should be installed and operated with minimum distance 0mm between the radiator and your body. This transmitter must not be co-located or operating in conjunction with any other antenna or transmitter.

Note: This equipment has been tested and found to comply with the limits for a Class B digital device, pursuant to part 15 of the FCC Rules. These limits are designed to provide reasonable protection against harmful interference in a residential installation. This equipment generates uses and can radiate radio frequency energy and, if not installed and used in accordance with the instructions, may cause harmful interference to radio communications. However, there is no guarantee that interference will not occur in a particular installation. If this equipment does cause harmful interference to radio or television reception, which can be determined by turning the equipment off and on, the user is encouraged to try to correct the interference by one or more of the following measures:

---Reorient or relocate the receiving antenna.

---Increase the separation between the equipment and receiver.

---Connect the equipment into an outlet on a circuit different from that to which the receiver is connected.

---Consult the dealer or an experience radio/TV technician for help.