Control iD

iDUHF Lite – Quick Guide

Thank you for purchasing the iDUHF Lite Access Controller! For more information, visit:

https://www.controlid.com.br/en/access-control/iduhf-lite/

By using Control iD products, you accept the Terms and Conditions of Use and Personal Data Protection Information available at:

https://www.controlid.com.br/legal/acessoeponto.pdf

1. Necessary Material

For the physical installation of your iDUHF Lite, the following items are required: EAM – External Access Module [1], installation kit (support part + clamp + screws), a 13mm wrench [2], a 12V/2A DC supply [2] and an antenna support mast installed [2].

[1] Optional according to installation scenario.
[2] Items sold separately.

⚠️ **Use a high-quality, noise-free 12V/2A supply to ensure full product operation.**

2. Physical Installation

Installation of the equipment is simple and should follow the sequence below:

a) Attach the support part of the installation kit to the back of the iDUHF Lite, using the four screws that come with the product and a wrench.

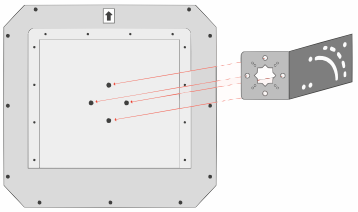

b) Use the support piece clamps and fixed wrench to place the iDUHF Lite on the support mast previously installed in the environment.

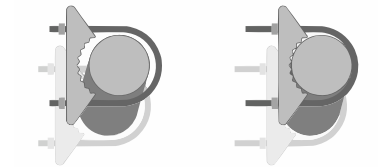

⚠️ Make sure the iDUHF Lite connectors are point downwards.

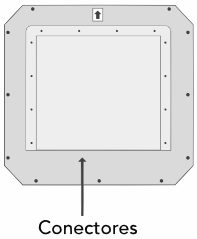

c) With the help of a fixed wrench, adjust the angle of the iDUHF Lite so that its front face points towards the place where vehicles pass. Consider, in the process, that the emitted signal has an aperture of 30° in all directions.

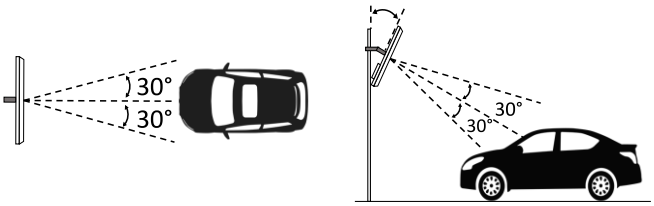

⚠️ **Do not install two iDUHF Lite units covering the same reading region.**

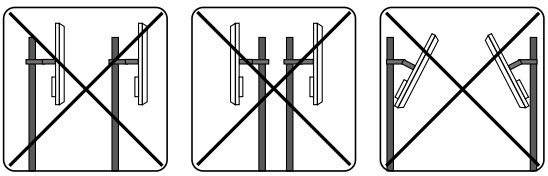

d) Identify your installation scenario in item 4 of this document and make the electrical connections described in the corresponding diagram.

e) Route the cables through the holes of the sealing piece and fit it to the product to protect it from external environmental factors.

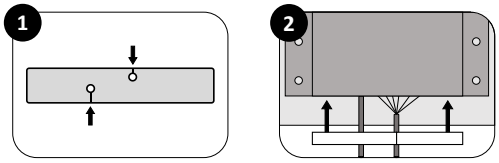

3. Description of Connection Pins

The iDUHF Lite has a dedicated network port (Ethernet) for setting its parameters and integration with Control iD's access software (iDSecure), as well as a 14-position terminal bar to ensure communication with the EAM and complete integration. with different installation environments.

Check the following table with the descriptions of the External Actuation Module – EAM and iDUHF Lite interfaces.

EAM – 2-pin Connector (Power)

+12V	Red	Power supply +12V
GND	Black	Power supply ground

EAM – 4-pin Connector (Connection with iDUHF Lite)

GND	Black	Power supply ground
B	Blue/Wh	Communication B
A	Blue	Communcation A
+12V	Red	Output +12V

EAM – 5-pin Connector (Wiegand In/Out)

WOUT0	Yellow/Wh	Wiegand output - DATA0
WOUT1	Yellow	Wiegand output - DATA1
GND	Black	Ground (common)
WIN0	Green/Wh	Wiegand input - DATA0
WIN1	Green	Wiegand input - DATA1

EAM – 6-pin Connector (Relay Control)

DS	Purple	Door sensor input
GND	Black	Ground (common)
BT	Yellow	Push button input
NC	Green	Normally closed contact
COM	Orange	Common contact
NO	Blue	Normally open contact

iDUHF Lite – 14-pin Connector

GND	Supply Grounding	
12V	12V Power	
W0O	Wiegand Output	
W1O	Wiegand Output	
485A	RS485 Communication (Pin A)	
485B	RS485 Communication (Pin B)	
TGR	Trigger Sensor	
DS	Door Sensor	
TX	RS-232 TX / 115200 bps 8N1	
RX	RS-232 RX / 115200 bps 8N1	
NO	Normally Open Contact	30VDC Max
COM	Common Contact	30VDC Max
NC	Normally Closed Contact	30VDC Max
GND	Supply Grounding	

EAM – Communication modes

- Default: EAM will communicate with any equipment
- Advanced: EAM will Only communicate with the equipment to which it was configured in this mode

⚠️ **To return EAM to default mode, turn it off, connect WOUT1 pin with BT and then turn it on. The LED will flash rapidly 20x indicating that the change has been made.**

4. Use Cases

Check the electrical schematics of each of the product installation options.

4.1. iDUHF Lite as Access Controller connected to EAM

In this scenario, the iDUHF Lite reads and identifies the vehicle TAG, authorizes the release according to the access rules (local or on the server – iDSecure)

and uses the EAM (SecBox) to control an external motor drive board.

For this setting, make the connections illustrated in the diagram below.

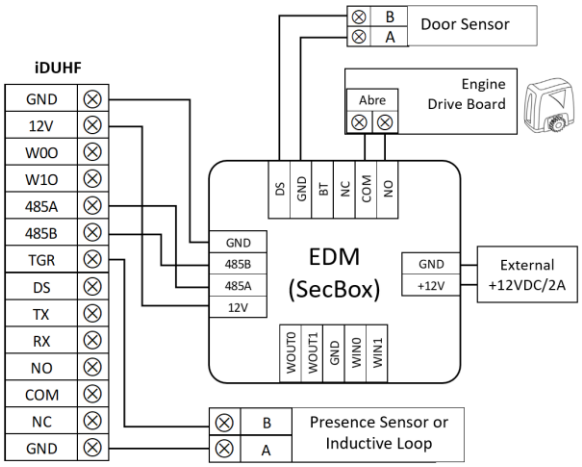

4.2. iDUHF Lite as Access Controller without EAM

In this scenario, the iDUHF Lite reads and identifies the vehicle TAG, authorizes the release according to the access rules (local or on the server – iDSecure) and controls an external motor drive board using an internal relay, without the need for the EAM.

For this setting, make the connections illustrated in the diagram below.

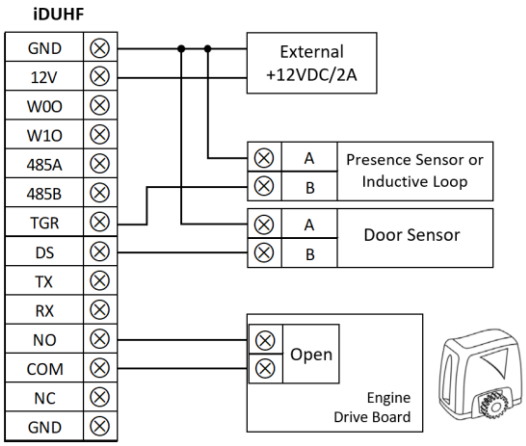

4.3. iDUHF Lite as UHF Reader (Wiegand)

In this scenario, the iDUHF Lite reads the vehicle TAG identification number and sends it to an external controller board (central control system) via the Wiegand protocol. For this setting, make the connections like the next diagram.

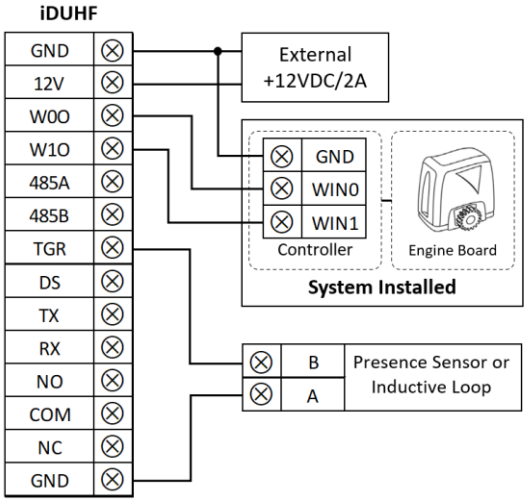

5. Sensors

5.1. Trigger Sensor (Trigger - TGR)

The **TGR** input signal has the functionality to control the triggering of the TAGs reading from a specific event. When using a barrier sensor or inductive loop, for example, it is guaranteed that the iDUHF Lite will only perform the identification when a vehicle is in the proper position, thus avoiding unwanted and unnecessary readings.

5.2. Door Sensor - DS

The DS input signal can be used to check the current state of the gate (open/closed). Thus, when integrated with monitoring systems, this feature can trigger alarms that indicate unusual behavior in the plant (breaking into the gate, for example).

6. Setting Web interface

6.1. Accessing from the Web Interface

To set up the iDUHF Lite via the network, connect the equipment directly to a PC via a Network cable (cross or point-to-point). Then, set up a fixed IP on your machine on the network 192.168.0.xxx (where xxx is different from 129 so there is no IP conflict) with mask 255.255.255.0.

To access the equipment configuration screen, open a web browser and enter the URL: http://192.168.0.129.

The login screen will appear. By default, access credentials are:

- Username: **admin**
- Password: **admin**

⚠️ **To reset the IP to factory default (192.168.0.129), restart the power to the product with the Trigger and Door Sensor contacts connected to the GND.**

6.2. Setting UHF Reading

To facilitate the integration and use of the iDUHF Lite in the access control system, access the **UHF Reader** option on the web interface and configure the following parameters:

- **General**
  - Wiegand output bits - 26 (default), 32, 34 or 66 bits.
  - Antenna transmission power - between 15 and 24 dBm to regulate the reading distance of vehicular TAGs.
  - Operation mode – Continuous for reading enabled constantly or Trigger for activating the reading depending on the Trigger input
  - Trigger Timeout – time in which the TAG reading will be enabled after the trigger sensor is activated.
  - Interval between readings
    - Same Tag – time interval between each reading of the same TAG.
    - Different Tags – time interval for each reading of TAGs with different IDs.
- **Advanced**
  - Channel Selection – choice of readout frequencies the iDUHF Lite can operate on. It is recommended to use this setting to avoid interference when more than one product is installed in the environment.

FCC Compliance Statement

This device complies with part 15 of the FCC Rules. Operation is subject to the following two conditions: (1) this device may not cause harmful interference, and (2) this device must accept any interference received, including interference that may cause undesired operation. CAUTION: The grantee is not responsible for any changes or modifications not expressly approved by the party responsible for compliance. Such modifications could void the user's authority to operate the equipment.

NOTE: This equipment has been tested and found to comply with the limits for a Class B digital device, pursuant to part 15 of the FCC Rules. These limits are designed to provide reasonable protection against harmful interference in a residential installation. This equipment generates, uses, and can radiate radio frequency energy, and if not installed and used in accordance with the instructions, may cause harmful interference to radio communications. However, there is no guarantee that interference will not occur in a particular installation. If this equipment does cause harmful interference to radio or television reception, which can be determined by turning the equipment off and on, the user is encouraged to try to correct the interference by one or more of the following measures:– Reorient or relocate the receiving antenna.

– Increase the separation between the equipment and receiver.

– Connect the equipment into an outlet on a circuit different from that to which the receiver is connected.

– Consult the dealer or an experienced radio/TV technician for help.

This equipment complies with the FCC radiation exposure limits set forth for an uncontrolled environment. This equipment should be installed and operated with a minimum distance of 20cm between the radiator and all persons. This transmitter must not be co-located or operating in conjunction with any other antenna or transmitter.

Canadian Compliance Statement

This device contains license-exempt transmitter(s)/receiver(s) that comply with Innovation, Science and Economic Development Canada license-exempt RSS(s). Operation is subject to the following two conditions:

(1) This device may not cause interference.

(2) This device must accept any interference, including interference that may cause undesired operation of the device.

L'émetteur/récepteur exempt de licence contenu dans le présent appareil est conforme aux CNR d'Innovation, Sciences et Développement économique Canada applicables aux appareils radio exempts de licence. L'exploitation est autorisée aux deux conditions suivantes :

1) L'appareil ne doit pas produire de brouillage;

2) L'appareil doit accepter tout brouillage radioélectrique subi, même si le brouillage est susceptible d'en compromettre le fonctionnement.

NOTE: This equipment complies with RSS-102 radiation exposure limits set forth for an uncontrolled environment. This equipment should be installed and operated with minimum distance 30cm between the radiator & your body. REMARQUE: Cet équipement est conforme aux limites d'exposition aux radiations RSS-102 établies pour un environnement non contrôlé. Cet équipement doit être installé et utilisé à une distance minimale de 30 cm entre le radiateur et votre corps.

"This equipment is not entitled to protection against harmful interference and may not cause interference to duly authorized systems."