Airplay Function
For iPhone, iPad and iMac smart device with ios operating system, you can use the Wi-Fi speaker with Airplay function. Connect your device to the speaker Wi-Fi. In the pull-up menu, click Airplay and choose the Wi-Fi speaker, then the sound can be steamed from your smart device.

Note: This equipment has been tested and found to comply with the limits for a Class B digital device, pursuant to part 15 of the FCC Rules. These limits are designed to provide reasonable protection against harmful interference in a residential installation. This equipment generates, uses and can radiate radio frequency energy and, if not installed and used in accordance with the instructions, may cause harmful interference to radio communications. However, there is no guarantee that interference will not occur in a particular installation. If this equipment does cause harmful interference to radio or television reception, which can be determined by turning the equipment off and on, the user is encouraged to try to correct the interference by one or more of the following measures:
—Reorient or relocate the receiving antenna.
—Increase the separation between the equipment and receiver.
—Connect the equipment into an outlet on a circuit different from that to which the receiver is connected.
—Consult the dealer or an experienced radio/TV technician for help.

USER MANUAL

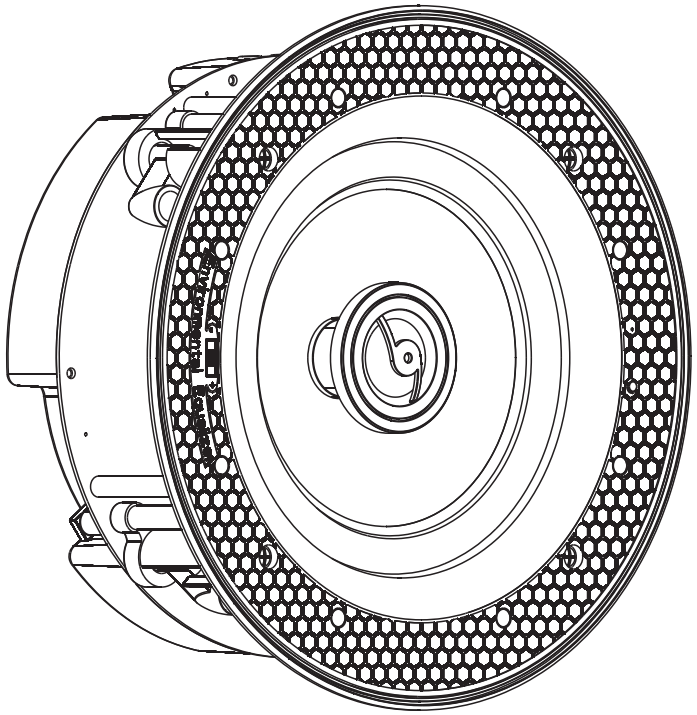

WIRELESS SPEAKER

MULTI-ROOM MUSIC SOLUTION

Specification

Wi-Fi feature:
- Built-in Wi-Fi
- Wireless standard: 802.11b/g/n
- Support online audio streaming media
- Support audio format: MP3/WMA/AAC/ACC/ACC+/ALAC/APE/WAV

Amplifier feature:
- Type: Class D(digital)
- RMS Power:2x30W/8ohm
- Power input :DC24V/2.5A

Speaker:
- Frequency response:65Hz-20KHz
- RMS power:2x30W
- Impedance:8 ohms
- Sensitivity(1w/1m):90dB
- Woofer:6.5"Kevlar woven cone
- Tweeter:0.75" Titanium dome
- Treble attenuation:+3dB/-3dB

Package Contents

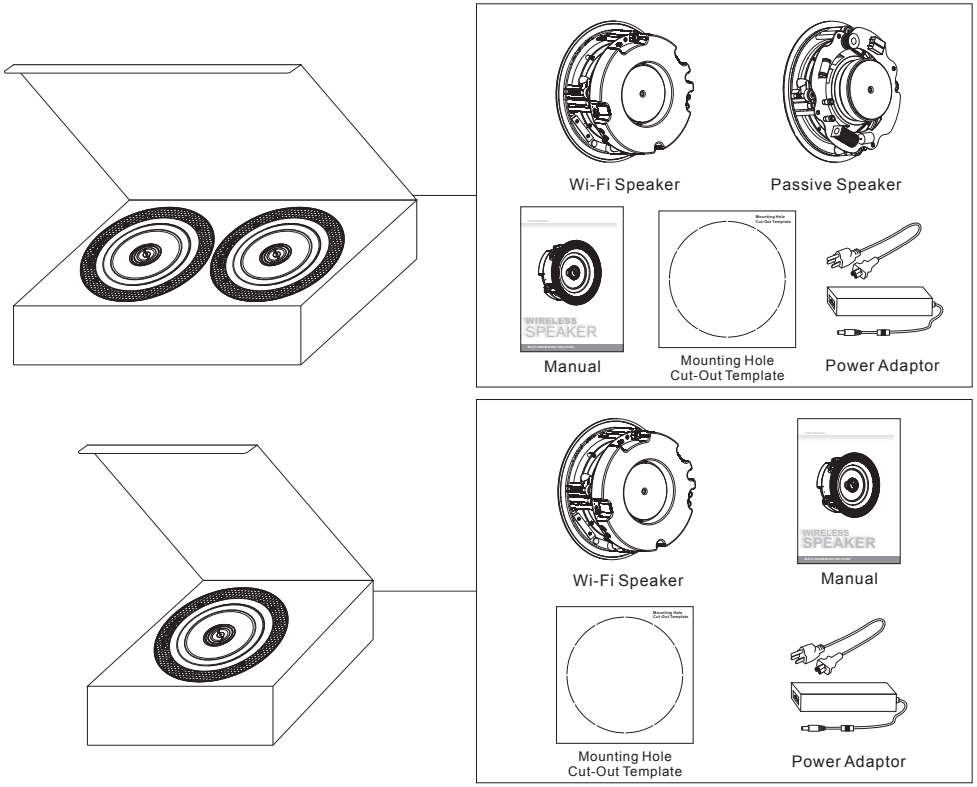

Parts Of The Wi-Fi Speaker

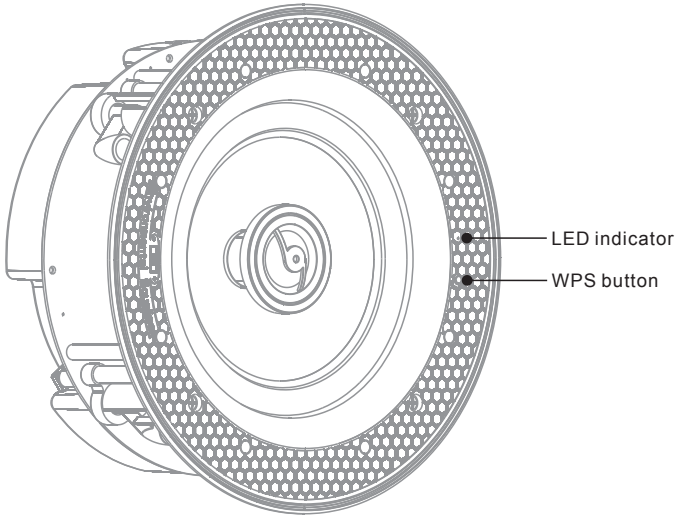

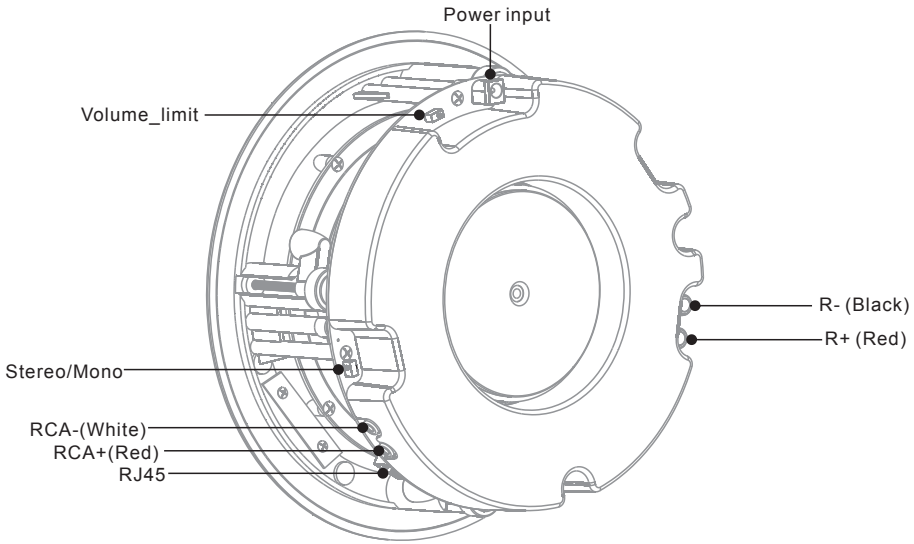

LED indicator: indicate the power, wifi and music working status.
R+(Red) R-(Black): to link passive speaker to stream stereo sound.
RCA: to connect with your home TV set.
Power input: connect with DC adaptor to offer power supply for the speaker.
WPS: the trigger to configure multi-room music network or restore the device to original default settings.
Volume_limit: slide to choose 50%/100% volume output.
Stereo/Mono: slide to choose stereo/mono mode.

Controller APP Installation

1. Controller APP Installation

Please search "Smartsonix" to download controller app from Google Play (Android) or Apple App Store (IOS).

2. Wi-Fi Speaker testing

Before your Wi-Fi speaker is installed into ceilings, please arrange testing to make sure the device properly works.

Step 1 Connect the Wi-Fi speaker to power supply

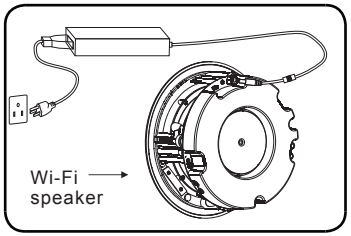

Step 2 Switch the Wi-Fi function and connect your phone to the Wi-Fi

Step 3 Start the controller APP smartsonix and click ADD DEVICE

Step 4 Enter the password of the router and click NEXT. Please make sure the router is available in your space.

Step 5 Press the WPS button on the back of the speaker to configure network and click NEXT.

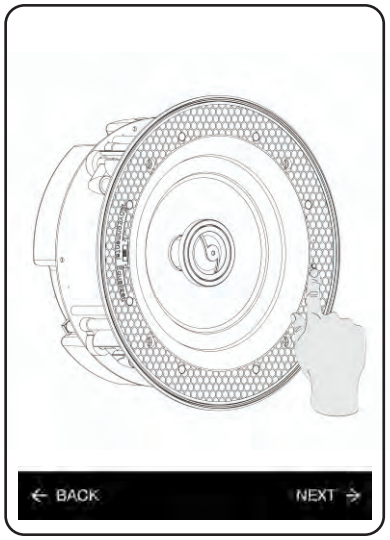

Step 6 Later a progress diagram comes, wait for a few seconds, the device will be connected to your router automatically. If fails, click RETRY and repeat the operation of step 4 and step 5.

Step 7 Name the device according to the room you will install and click FINISH.

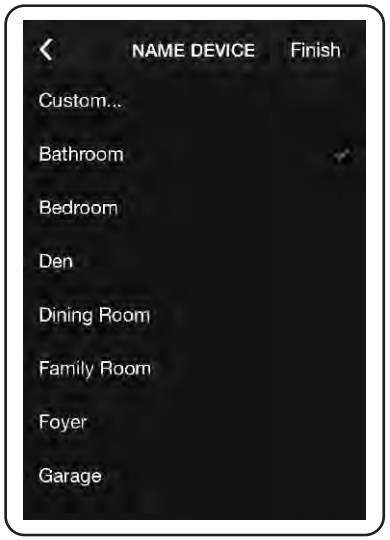

Step 8 After setting, the Wi-Fi speaker will be in the device list. If you have more than 1 Wi-Fi speakers, add devices and name them accordingly. After these steps, your multi-room music network is successfully established.

Step 9 Choose a device and play a song in your phone to test whether the device works. If ok, testing finishes and you can forward the speaker installation.

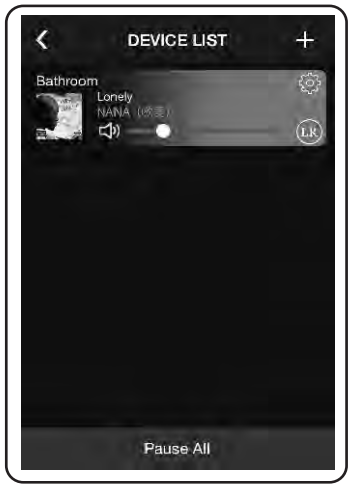

3. Wi-Fi Speaker Installation

Equipment you will need:
Besides template that is included in the box, you must have a ladder and the equipment shown below to guarantee installation go smoothly.

pencil

screwdriver

speaker cable

wire cutters

measuring tape

protective eyewear

stud finder

cutting saw

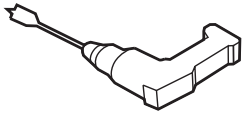
drill

Step 1 Use enclosed template to mark out the cut out, then simply cut along the line. This is the only cut you will need to make.

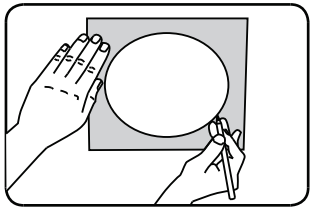

Installation dimension: Φ 210 mm
Installation depth: ＞102mm

Step 2 Place the DC adaptor in a suitable place in your wall or ceiling, leave the plug end and jack end. During speaker installation, please make sure the adaptor is cut out from power supply.

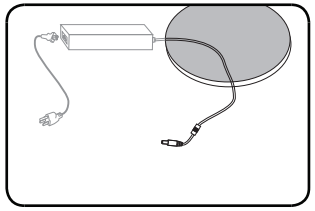

Step 3 Connect the jack of DC adaptor to the Wi-Fi speaker and install the speaker into ceiling. The installed place should be in accordance with the room you have set in the controller APP.

Step 4 To enjoy stereo sound and achieve better sound quality, you can install another passive speaker to be paired with the Wi-Fi speaker. Lying loudspeaker cable from passive to the R+ and R- connectors of the Wi-Fi speaker.

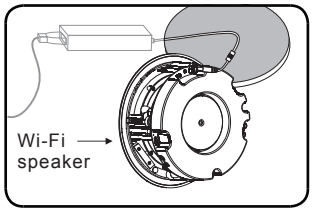

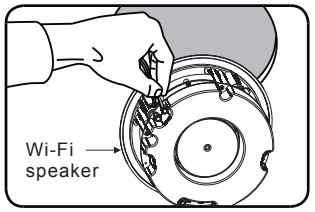

Lying diagram between Wi-Fi speaker and passive speaker or home TV set.
Cables should be lain before Wi-Fi speaker installed.

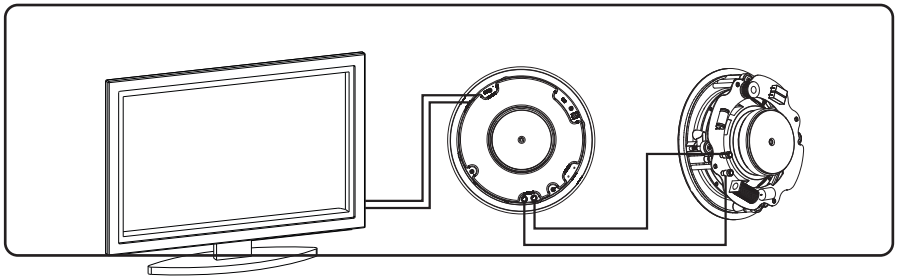

Step 5 Cover the grill for the installed speaker and connect the plug of DC adaptor to the power supply.

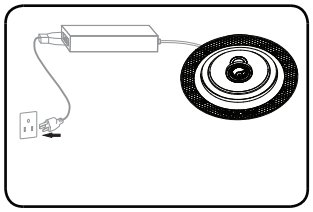

Device Resetting
If the multi-room network fails during operation, you can press the WPS button to restore the speaker to its original factory default settings.
Uninstall the Wi-Fi speaker from ceiling and press the WPS button for around 5 seconds, during this operation, make sure the speaker is power supplied.

Device Personal setting
Rename: If you found Wi-Fi speaker wrongly named after installation, you can rename the device to a correct one.
Password: The initial password is 88888888, which can be reset in Smart Sonix App.

FCC Statement

Any Changes or modifications not expressly approved by the party responsible for compliance could void the user's authority to operate the equipment.

This device complies with part 15 of the FCC Rules. Operation is subject to the following two conditions:

(1) This device may not cause harmful interference, and

(2) This device must accept any interference received, including interference that may cause undesired operation.

FCC Radiation Exposure Statement:

This equipment complies with FCC radiation exposure limits set forth for an uncontrolled environment .

This equipment should be installed and operated with minimum distance 20cm between the radiator& your body.