Datasheet

CENTAURI 200

Product ID CT200 LTE 50

Version: 2.3

Date: 01-02-2021

Volansys Technologies Private Limited
Block A 7th Floor, Safal Profitaire, Corporate Road,
Prahladnagar, Ahmedabad 380015, India
www.volansys.com
Phone: 91-79-4004-1994
Email: info@volansys.com

Confidentiality Notice

Copyright © 2017 Volansys – All rights reserved.

This document is authored by Volansys and is Volansys' intellectual property, including the copyrights in all countries in the world. This document is provided under a license to use only with all other rights, including ownership rights, being retained by Volansys. This file may not be distributed, copied, or reproduced in any manner, electronic or otherwise, without the express written consent of Volansys.

TABLE OF CONTENTS

1 INTRODUCTION 5

1.1 PURPOSE 5
1.2 SCOPE 5
1.3 ACRONYMS & ABBREVIATIONS 5
1.4 REFERENCES 5

2 PRODUCT OVERVIEW 6

2.1 SYSTEM BLOCK DIAGRAM 7
2.2 FEATURES AND FUNCTIONALITY 8

3 MAJOR COMPONENTS ON CENTAURI 200 9

3.1 SECURE ELEMENT 10
3.2 WIRELESS CONNECTIVITY 10
3.3 WI-FI + BLUETOOTH COMBO MODULE 10
3.4 BLUETOOTH LOW ENERGY (BLE) MODULE 11
3.5 ZWAVE 700 MODULE 12
3.6 LONG TERM EVOLUTION (LTE) MODULE 12
3.7 POWER SUPPLY 13

4 PERIPHERAL INTERFACES 14

4.1 ETHERNET 14
4.2 IEEE FEATURES: 17
4.3 USB 17
4.4 DEBUG PORT 18
4.5 EMMC 19
4.6 DDR (DOUBLE DATA RATE) RAM 19
4.7 SWITCHES 19
4.8 LED'S 19
4.9 IO TABLE 20

5 ELECTRICAL THERMAL & ANTENNA RANGE CHARACTERISTICS 23

5.1 RECOMMENDED OPERATING CONDITIONS 23
5.2 THERMAL ANALYSIS DATA 23
5.3 RANGE FOR CT200 23

6 MECHANICAL DIMENSIONS 24

7 CERTIFICATION 26

7.1 FCC (FEDERAL COMMUNICATIONS COMMISSION) & IC (INDUSTRY CANADA) 26
CONFORME À LA NORME NMB-003 DU CANADA 26

APPLICATION NOTES 26

SAFETY PRECAUTIONS 26
DESIGN ENGINEERING NOTES 26

STORAGE CONDITIONS....27

LIST OF FIGURES

FIGURE 1 : CENTAURI 200 UNIT.... 6
FIGURE 2 : CENTAURI 200 PCBA....7
FIGURE 3 : CENTAURI 200 - SYSTEM BLOCK DIAGRAM.... 8
FIGURE 6 : NRF52840 BLE MODULE.... 11
FIGURE 8 : ZWAVE 700 MIKROBUS MODULE.... 12
FIGURE 9 : LTE MODULE.... 13
FIGURE 10 : INTERFACES ON CENTAURI 200....14
FIGURE 11 : ETHERNET PORTS.... 14
FIGURE 12 : USB PORT SELECTION JUMPER....18
FIGURE 14 : DEBUG PORT.... 18
FIGURE 15 : USER CONFIGURABLE SWITCHES.... 19
FIGURE 16 : LED'S ON CENTAURI 200.... 20

LIST OF TABLES

TABLE 1 : REVISION HISTORY.... 4
TABLE 2 : ACRONYMS & ABBREVIATIONS....5
TABLE 3 : REFERENCES....5
TABLE 4 : FEATURES AND FUNCTION....8
TABLE 6 : WI-FI RF CHARACTRICS.... 11
TABLE 7 : LED'S....20
TABLE 8 : IO ON CENTAURI 200.... 22
TABLE 9 : RECOMMENDED OPERATING CONDITIONS.... 23
TABLE 10 : THERMAL ANALYSIS....23
TABLE 11 : RANGE TEST....23

COPYRIGHT INFORMATION

The information contained in this document is the proprietary information of VOLANSYS Technologies Pvt., Ltd. The contents are confidential and any disclosure to persons other than the officers, employees, agents or subcontractors of the owner or licensee of this document, without the prior written consent of VOLANSYS, is strictly prohibited.

Further, no portion of this document may be reproduced, stored in a retrieval system, or transmitted in any form or by any means, electronic or mechanical, including photocopying and recording, without the prior written consent of VOLANSYS, the copyright holder.

VOLANSYS publishes this document without making any warranty as to the content contained herein. Further VOLANSYS reserves the right to make modifications, additions and deletions to this document due to typographical errors, inaccurate information, or improvements to products mentioned in the document at any time and without notice. Such changes will, nevertheless, be incorporated into new editions of this document.

Revision History

Date	Version	Details of change	Author	Reviewers
5-Aug-19	1	Initial draft	JB	KB
8-Feb-20	2	- Updated the document as per the latest rev2.0 of the schematics and layout. - Removed “Regulatory Statements” section. - Updated the document with standard document template.	SD	KB
19-Mar-20	2.1	- Updated all the tables, Images, added thermal & Range test data.	YP	KB
25-06-20	2.2	- Updated PoE source specification in section 3.10	SD	KB
03/02/2021	2.3	- Updated as per Ochsner certification	YP	KB

Table 1 : Revision History

1 INTRODUCTION

1.1 Purpose

This document describes the VOLANSYS' Centauri 200 enterprise/industrial IoT Gateway. Targeted for multiple use cases in various segments of IoT such as Smart Home, Buildings and Industries. Core features are its Hardware Design with Multi-Radio Connectivity such as Wi-Fi, BLE/BT, LTE, Thread, Zigbee® and Z-Wave. Apart from multiple radio connectivity options.

This document mainly describes Centauri 200 from a Hardware point of view, there are separate software development manuals that can be also consulted.

For any further support contact Volansys support services at: centauri.support@volansys.com

1.2 Scope

The scope of this document is to detail out aspect of CT200 Gateway product design, specifications, Features etc.

This document, henceforth, is to be used as a direct reference by end customers that uses this product. CT200 Gateway team will also use this document to review, approve and accept the product design for showcase purpose.

1.3 Acronyms & Abbreviations

Terms	Definition
SoC	System on Chip
CPU	Central Processing Unit
BLE	Bluetooth Low Energy
IoT	Internet of things
RST	Reset
UART	Universal asynchronous receiver-transmitter
LED	Light Emitting Diode
GPIO	General Purpose Input/output
TBD	To Be Determined
Etc	Et Criteria

Table 2 : Acronyms & Abbreviations

1.4 References

Sr No	Reference Document Title	Provided by	Remarks
1	Schematics design	Volansys	Primary reference
2	Layout design	Volansys	N/A

Table 3 : References

2 PRODUCT OVERVIEW

Volansys' Centauri 200 is all-in-one gateway development kit, which is based on NXP's power efficient i.MX6ULL/ i.MX6UltraLite/ i.MX6ULZ applications processor featuring ARM® Cortex®-A7 core CPUs.

Centauri 200 has a wide range of interfaces available like USB, Ethernet, RS232/485, CAN. It supports various wireless connectivity protocol as Thread, BLE, Zigbee®, Z-Wave, Wi-Fi b/g/n, LTE. Centauri 200 has standard MikroBus compatible socket header which enables a user to use any standard MikroBus add on modules. The figure below shows the complete Centauri 200 unit and internal view depicting all its interfaces.

CENTAURI 200 IoT Gateway platform is specifically crafted to satisfy all the needs of the Enterprise/Industrial IoT Gateway Solution. Gateway is built on secure, power-efficient, and cost-optimized ARM® Cortex®-A7 based i.MX6ULL SoC. This enables a greater amount of flexibility in providing various RF connectivity and peripherals to make a tailor-made solution according to end-user needs. VOLANSYS also offers a CENTAURI Software Framework for all OEMs to quickly build applications. CENTAURI Gateway platform is pre-integrated with well-known cloud & app platform providers to help OEMs with faster application development. OEMs can build Zigbee gateway, Z-Wave gateway, BLE gateway and Thread gateway-based solution on the platform with any two radios supported at a time. CENTAURI Gateway platform is available under OEM offerings to reduce time to market so that you can focus more on creating values in end-user applications.

Figure 1: Centauri 200 Unit

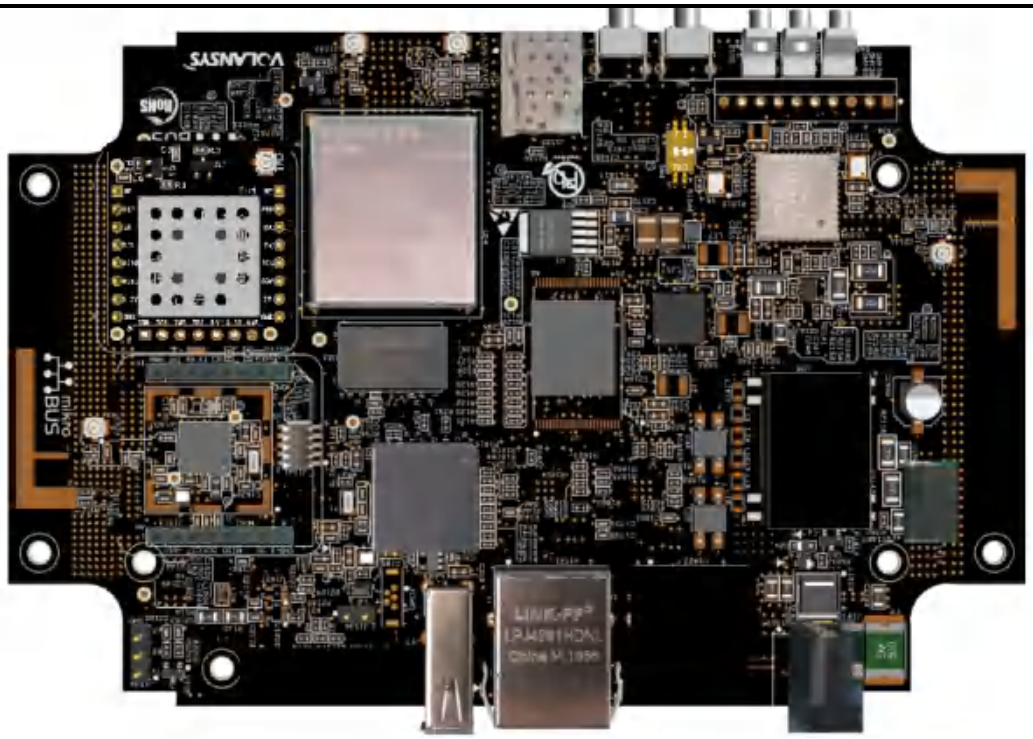

Figure 2: Centauri 200 PCBA

2.1 System Block Diagram

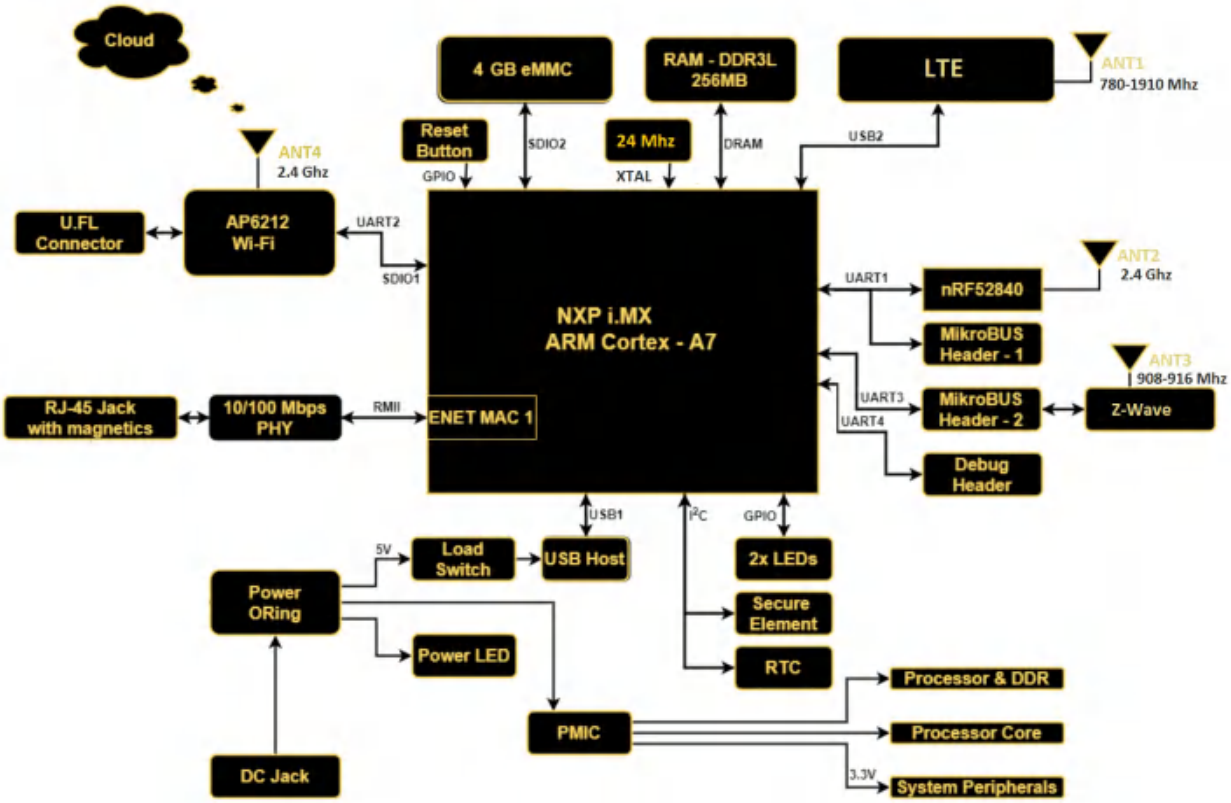

Figure 3: Centauri 200 - System Block Diagram

2.2 Features and Functionality

The table below lists major features and function of the Centauri 200.

Sr No	Block	Feature Parameter	Specification
1	CPU	Core & Frequency	i.MX 6ULL (792 MHz) ARM Cortex A7
2	Memory	RAM Memory Type	DDR3L
		RAM Size	256 MB
		EMMC	4 GB
3	Interfaces	Ethernet	1 x 10/100Mbps
		USB	1 x USB2.0 (Host/Device)
		Mikrobus header	1 x Z wave Module
		Wi-Fi + BLE	BLE 4.2, Wi-Fi 802.11 b/g/n
		LTE	CAT1(4G)
4	User Interface/ IO	Switch	2x user configurable switches
		LED's	1x power LED
			2x user configurable LED's
		Debug Port	1x UART port for debug

Table 4: Features and Function

3 MAJOR COMPONENTS ON CENTAURI 200

Below are some of major features and interfaces of Centauri 200 base board:

- 2x MikroBus Compatible Header. (Supports ZGM130S Z-Wave module)
- 1x Wi-Fi b/g/n + BT/BLE Combo module with U.FL connector to support external antenna.
- On board nRF52840 BLE module with optional external antenna.
- 1x 4FF (Nano) SIM card connector for LTE.
- 1x JTAG header.
- 1x USB 2.0 port (host/device configurable).
- 1x 10/100 Ethernet port.
- 3x LED's (1x power + 2x user configurable).
- 2x user configurable switches.
- DC power jack (5V, 3A) or terminal block (9-27V).

Note: Other MikroBUS compatible modules can be added to the Centauri 200 via its MikroBUS compatible headers.

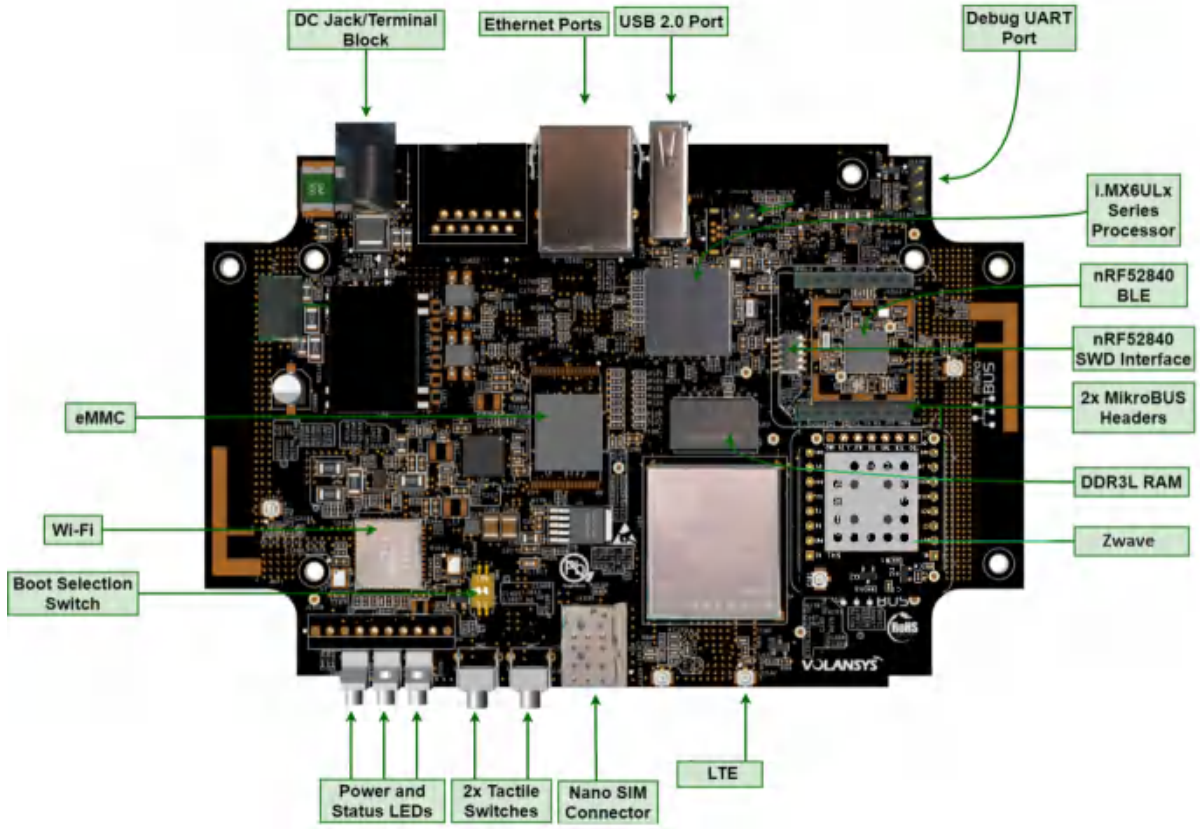

Figure 4 : Centauri 200 - Base Board

3.1 Secure Element

Centauri 200 has a built-in secure element IC providing device to device authentication, key storage and data protection, etc features based on NXP's A71CH chip.

The A71CH is a ready-to-use solution providing a root of trust at the IC level and proven, chip-to-cloud security right out of the box. It is a platform capable of securely storing and provisioning credentials, securely connecting IoT devices to cloud services and performing cryptographic node authentication.

More information regarding this chip can be found at the link below:

https://www.nxp.com/docs/en/data-sheet/A71CH-SDS.pdf

3.2 Wireless Connectivity

Centauri 200 has on board AP6212, ZGM130S, nRF52840 and EG91 wireless modules. Below are major features of each wireless peripheral. More information regarding the wireless modules can be obtained from their respective websites and data-sheets.

3.3 Wi-Fi + Bluetooth Combo Module

The Centauri 200 uses an Ampak AP6212 Wi-Fi + Bluetooth combo module. AP6212 is a single chip 2.4 GHz WLAN IEEE 802.11 b/g/n single band radio and Bluetooth V4.0(HS) with integrated class 1.5 PA and Low Energy (LE) support. The Cenaturi 200 comes with two antenna options for the Wi-Fi/BLE viz. Internal PCB trace antenna and external high gain whip antenna.

Below image shows the RF specification of the Wi-Fi/BT module.

Sr	Feature	Description
1	WLAN Standard	IEEE 802.11b/g/n, WiFi compliant
2	Frequency Range	2.400 GHz ~ 2.4835 GHz (2.4 GHz ISM Band)
3	Number of Channels	2.4GHz：Ch1 ~ Ch14
4	Modulation	802.11b : DQPSK, DBPSK, CCK
		802.11 g/n : OFDM /64-QAM,16-QAM, QPSK, BPSK
5	Output Power (Burst Average Power)	802.11b /11Mbps : 16 dBm ± 1.5 dB @ EVM -9dB
		802.11g /54Mbps : 15 dBm ± 1.5 dB @ EVM -25dB
		802.11n /65Mbps : 14 dBm ± 1.5 dB @ EVM -28dB
6	Receive Sensitivity (11n,20MHz) @10% PER	- MCS=0 PER @ -85 dBm, typical
		- MCS=1 PER @ -84 dBm, typical
		- MCS=2 PER @ -82 dBm, typical
		- MCS=3 PER @ -80 dBm, typical
		- MCS=4 PER @ -77 dBm, typical
		- MCS=5 PER @ -73 dBm, typical
		- MCS=6 PER @ -71 dBm, typical
		- MCS=7 PER @ -68 dBm, typical
7	Receive Sensitivity (11g) @10% PER	- 6Mbps PER @ -86 dBm, typical
		- 9Mbps PER @ -85 dBm, typical
		- 12Mbps PER @ -85 dBm, typical

		- 18Mbps PER @ -83 dBm, typical
		- 24Mbps PER @ -81 dBm, typical
		- 36Mbps PER @ -78 dBm, typical
		- 48Mbps PER @ -73 dBm, typical
		- 54Mbps PER @ -71 dBm, typical
8	Receive Sensitivity (11b) @8% PER	- 2Mbps PER @ -88 dBm, typical
		- 5.5Mbps PER @ -87 dBm, typical
		- 11Mbps PER @ -84 dBm, typical
		- 2Mbps PER @ -88 dBm, typical
9	Data Rate	802.11b : 1, 2, 5.5, 11Mbps
		802.11g : 6, 9, 12, 18, 24, 36, 48, 54Mbps
10	Data Rate (20MHz ,Long GI,800ns)	802.11n: 6.5, 13, 19.5, 26, 39, 52, 58.5, 65Mbps
11	Data Rate (20MHz ,short GI,400ns)	802.11n : 7.2, 14.4, 21.7, 28.9, 43.3, 57.8, 65,72.2Mbps
12	Maximum Input Level	802.11b : -10 dBm
		802.11g/n : -20 dBm
13	Antenna Reference	Small antennas with 0~2 dBi peak gain

Table 6 : Wi-Fi RF Charactrics

3.4 Bluetooth Low Energy (BLE) Module

The Centauri 200 implements a Nordic semiconductor nRF52840 multiprotocol transceiver chip on board. The nRF52840 is fully multiprotocol capable of full protocol concurrency. It has protocol support for Bluetooth 5.0, Bluetooth mesh, Thread, Zigbee, 802.15.4, ANT and 2.4 GHz proprietary stacks. This chip also comes with inbuilt sophisticated power management system for low energy consumption.

The Centauri 200 provides a PCB trace antenna on board for operation of this section and has U.FL connector for providing support to external 2.4 GHz antenna depending upon the use case.

Figure 4-5 depicts implementation of the nRF52840 on the Centauri 200 board.

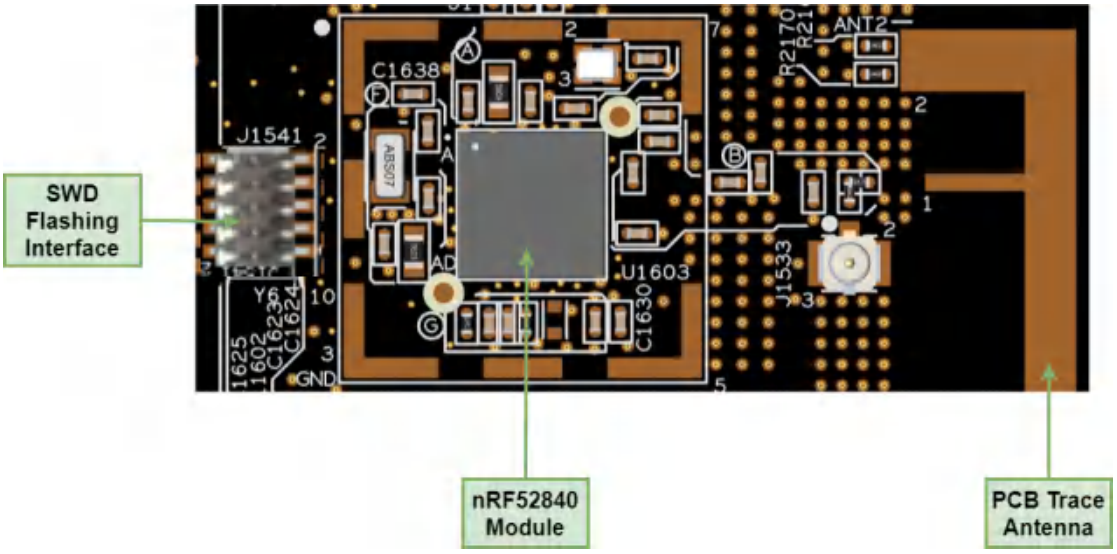

Figure 5 : nRF52840 BLE Module

3.5 ZWave 700 Module

ZWave 700 connectivity is possible on Centauri 200 using Volansys' ZWave 700 module. It is developed using the Silicon Labs Z-Wave 700 Zen Gecko SiP Module, ZGM130S. The ZGM130S is a fully integrated Z-Wave module, enabling rapid development of Z-Wave solutions. A base band controller, Sub-GHz radio transceiver, crystal, decoupling, and matching is included to provide a complete Z-Wave System-in-Package module requiring only an external antenna. An ideal solution for smart home control and sensing applications such as sensors, door locks, light switches, security networks as well as gateways.

Following are the features of the Zwave 700 module:

- ITU G.9959 compliant.
- Supports all ZWave bands (865.2 MHz - 926.3 MHz).
- ARM Cortex-M4 Floating Point Unit.
- 39 MHz clock speed.
- 64 Kb application flash.
- 8 Kb application RAM.
- MikroBUS compliant.

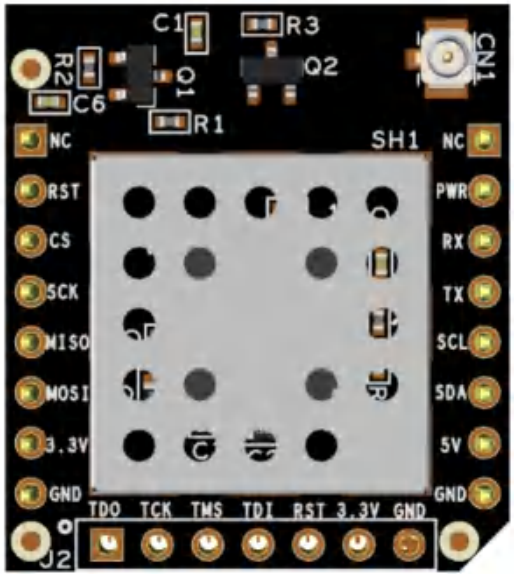

Figure 6 : ZWave 700 MikroBUS Module

3.6 Long Term Evolution (LTE) Module

Centauri 200 supports on-board LTE cellular connectivity LTE CAT1(4G), CAT M1, NB-IOT and WCDMA (3G) to provide compatibility with multiple geographic regions like North America, Europe, etc. Centauri 200 uses external antenna for LTE wireless connectivity. Besides LTE, Centauri 200 also supports GNSS/GPS using an external antenna interface.

Centauri 200 has a Nano(4FF) SIM card socket. The socket is user accessible and thus, SIM card can be changed without opening the Centauri 200 enclosure.

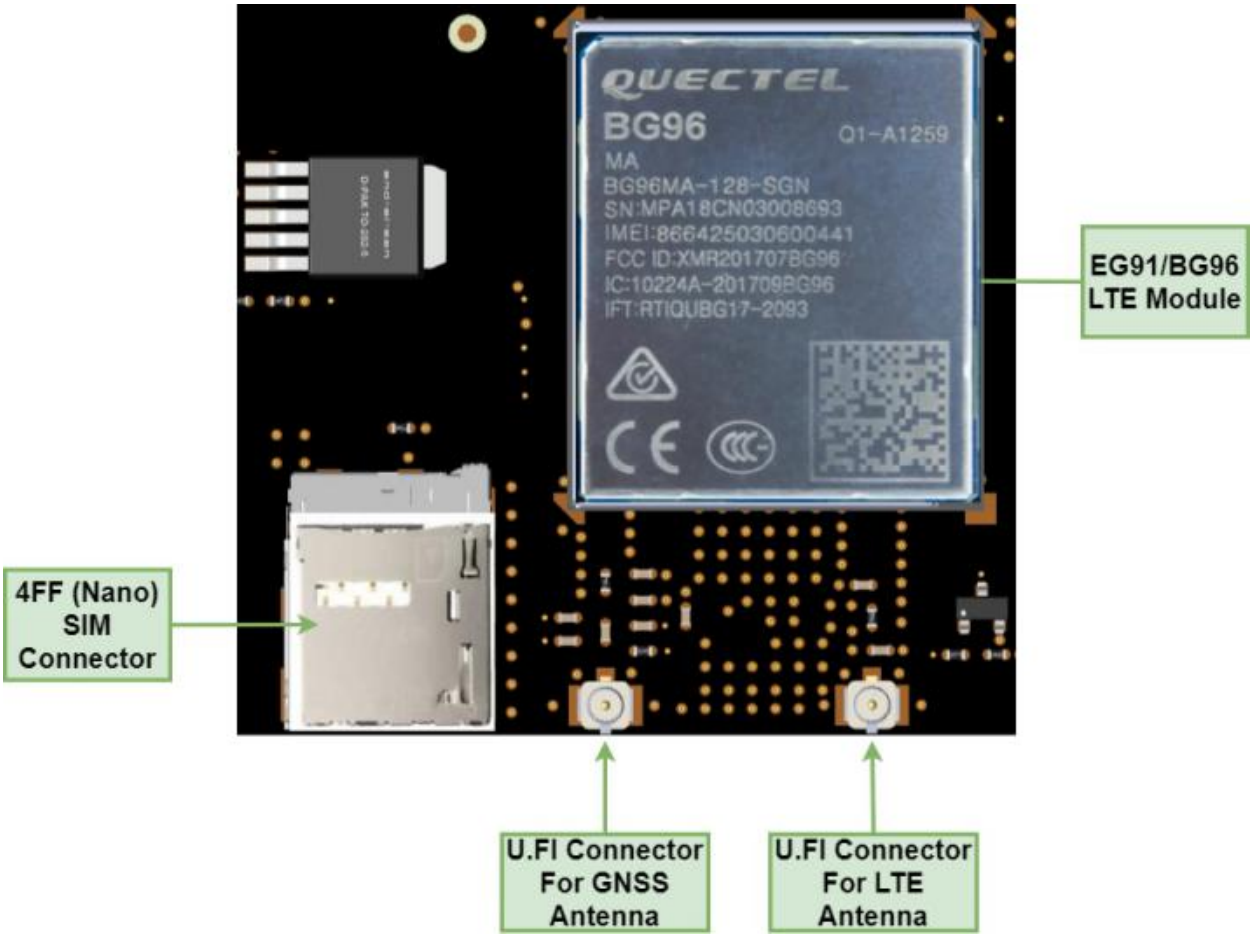

Figure 7 : LTE Module

3.7 Power Supply

The Centauri 200 has the following power options:

- **DC Jack**: Uses a 5V, 3A DC power adaptor.
- **Terminal Block**: Uses a 9-27V, 1.6-0.6A DC power adaptor

4 PERIPHERAL INTERFACES

This section describes interfaces of Centauri 200. Below figure shows the available interfaces of Centauri 200. Figure 5-1 describes the peripheral interfaces of Centauri 200 pictorially.

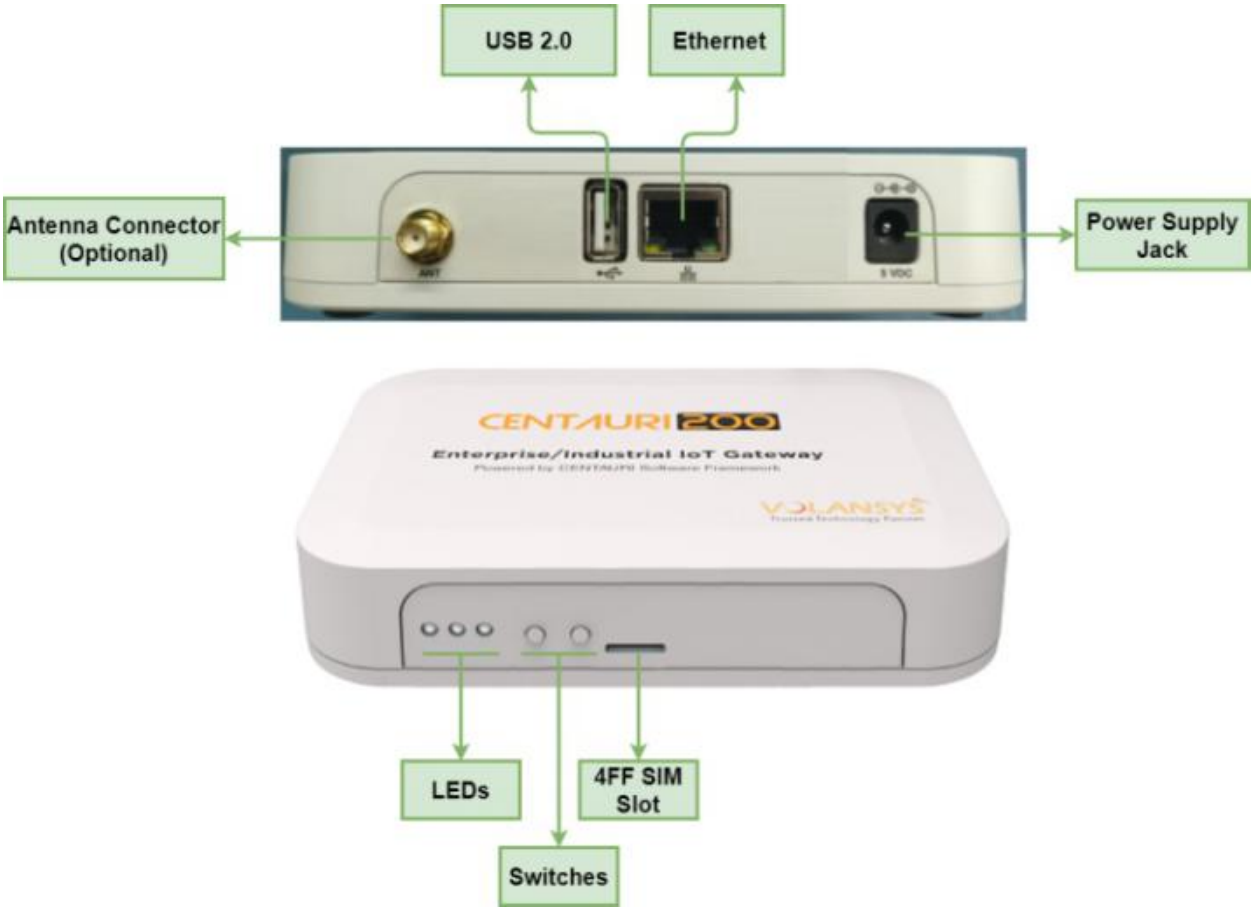

Figure 8 : Interfaces on Centauri 200

4.1 Ethernet

The Centauri 200 has 1 x 10/100Mbit/s Ethernet ports.

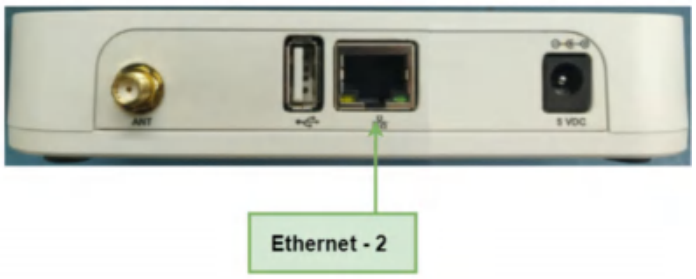

Figure 9 : Ethernet Ports

Ethernet MAC features:

- Implements the full 802.3 specification with preamble/SFD generation, frame padding generation, CRC generation and checking, supports zero-length preamble.
- Dynamically configurable to support 10/100-Mbit/s operation.
- Supports 10/100 Mbit/s full-duplex and configurable half-duplex operation.
- Compliant with the AMD magic packet detection with interrupt for node remote power management.
- Seamless interface to commercial Ethernet PHY devices via one of the following:
- A 4-bit Media Independent Interface (MII) operating at 2.5/25 MHz.
- A 4-bit non-standard MII-Lite (MII without the CRS and COL signals) operating at 2.5/25 MHz.
- A 2-bit Reduced MII (RMII) operating at 50 MHz.
- Simple 64-Bit FIFO user-application interface.
- CRC-32 checking at full speed with optional forwarding of the frame check sequence(FCS) field to the client.
- CRC-32 generation and append on transmit or forwarding of user application provided FCS selectable on a per-frame basis.
- In full-duplex mode:
- Implements automated pause frame (802.3 x31A) generation and termination, providing flow control without user application intervention.
- Pause quanta used to form pause frames — dynamically programmable.
- Pause frame generation additionally controllable by user application offering flexible traffic flow control.
- Optional forwarding of received pause frames to the user application.
- Implements standard flow-control mechanism.
- In half-duplex mode: provides full collision support, including jamming, back-off, and automatic re-transmission.
- Supports VLAN-tagged frames according to IEEE 802.1Q
- Programmable MAC address: Insertion on transmit; discards frames with mismatching destination address on receive. (except broadcast and pause frames)
- Programmable promiscuous mode support to omit MAC destination address checking on receive.

- Multicast and uni cast address filtering on receive based on 64-entry hash table, reducing higher layer processing load.
- Programmable frame maximum length providing support for any standard or proprietary frame length.
- Statistics indicators for frame traffic and errors (alignment, CRC, length) and pause frames providing for IEEE 802.3 basic and mandatory management information database (MIB) package and remote network monitoring (RFC 2819).
- Simple handshake user application FIFO interface with fully programmable depth and threshold levels.
- Provides separate status word for each received frame on the user interface providing information such as frame length, frame type, VLAN tag, and error information.
- Multiple internal loop back options.
- MDIO master interface for PHY device configuration and management supports two programmable MDIO base addresses, and standard (IEEE 802.3 Clause 22) and extended (Clause 45) MDIO frame formats.
- Supports legacy FEC buffer descriptors.
- Interrupt coalescing reduces the number of interrupts generated by the MAC, reducing CPU loading.

IP protocol performance optimization features:

- Operates on TCP/IP and UDP/IP and ICMP/IP protocol data or IP header only, enables wire-speed processing, Supports IPv4 and IPv6.
- Transparent passing of frames of other types and protocols.
- Supports VLAN tagged frames according to IEEE 802.1q with transparent forwarding of VLAN tag and control field.
- Automatic IP-header and payload (protocol specific) checksum calculation and verification on receive.
- Automatic IP-header and payload (protocol specific) checksum generation and automatic insertion on transmit configurable on a per-frame basis.
- Supports IP and TCP, UDP, ICMP data for checksum generation and checking.
- Supports full header options for IPv4 and TCP protocol headers.
- Provides statistics information for received IP and protocol errors.
- Configurable automatic discard of erroneous frames.
- Configurable automatic host-to-network (RX) and network-to-host (TX) byte order conversion for IP and TCP/UDP/ICMP headers within the frame.

- Configurable padding removes for short IP datagrams on receive.
- Configurable Ethernet payload alignment to allow for 32-bit word-aligned header and payload processing.
- Programmable store-and-forward operation with clock and rate decoupling FIFOs.

4.2 IEEE features:

- Supports all IEEE 1588 frames.
- Allows reference clock to be chosen independently of network speed.
- Software-programmable precise time stamping of ingress and egress frames.
- Timer monitoring capabilities for system calibration and timing accuracy management.
- Precise time stamping of external events with programmable interrupt generation.
- Programmable event and interrupt generation for external system control.
- Supports hardware- and software-controllable timer synchronization.
- Provides a 4-channel IEEE 1588 timer. Each channel supports input capture and output compare using the 1588 counter.

4.3 USB

Centauri 200 has one USB 2.0 Type A port on back side and is configured as a host device by default. Below are major features of USB interface:

- High-Speed/Full-Speed/Low-Speed support.
- High Speed, and Full Speed operation in Peripheral mode (with UTMI transceiver).
- Hardware support for OTG signaling, session request protocol, and host negotiation protocol.
- Up to 8 bidirectional endpoints.
- Low-power mode with local and remote wake-up capability.
- Serial PHY interfaces configurable for bidirectional/unidirectional and differential/single ended.
- Embedded DMA controller.

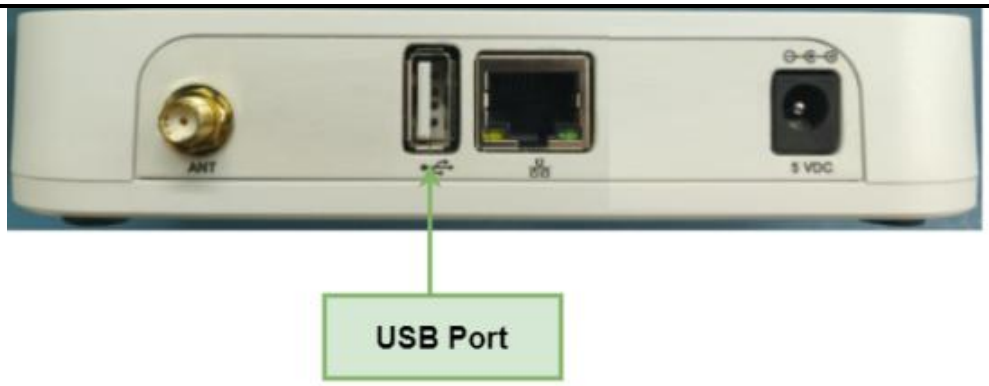

Figure 10 : USB Port Selection Jumper

The Centauri 200 can also be configured as a USB slave device. This is done by closing the selection jumper using a jumper shunt. The location of the selection jumper is on the Centauri 200 PCBA. Figure 5-3 shows the jumper on a Centauri 200 PCBA.

4.4 Debug Port

The Centauri 200 has an inbuilt debug UART port with three pins. Debug is only possible if the user can access Centauri 200 PCBA. It is to be noted that the UART signaling occurs at 3.3V logic levels and the pins are not 5V tolerant. A user can enter the debug prompt on a PC/Mac using a normal 3.3V logic USB to UART converter.

These are the parameters to establish debug UART connection with Centauri 200:

- Baud rate: 115200
- Data bits: 8
- Parity: None
- Stop bits: 1
- Flow control: None

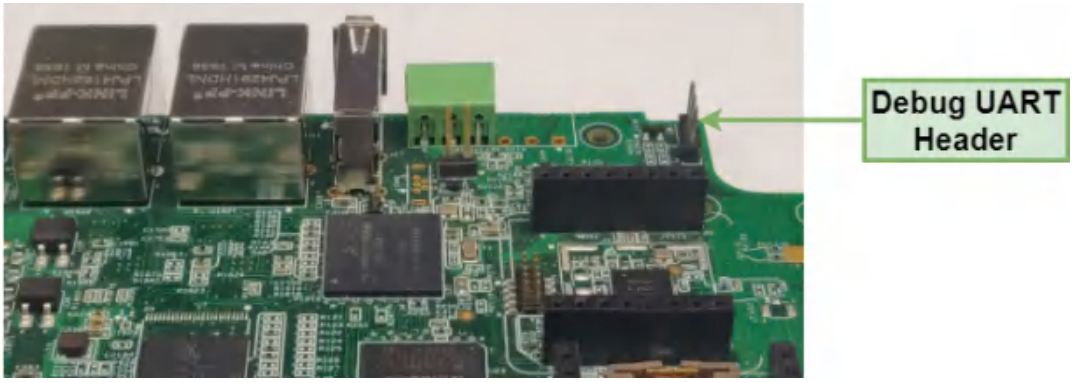

Figure 11 : Debug Port

4.5 eMMC

For storage of data, Centauri 200 utilizes eMMC/NAND. Note that Centauri 200 also has an option of using NAND instead of eMMC as per the variant. The table below describes eMMC/NAND storage densities possible on Centauri 200.

Sr No	Memory	Density
1	eMMC	Standard - 4 GB

Table 17: Storage Options

4.6 DDR (Double Data Rate) RAM

The Centauri 200 uses a DDR3L memory operating at 1866 MT/s . The standard density of the DDR RAM for Centauri 200 is 256 MB. The table below shows the possible densities possible with Centauri 200.

Sr No	Memory	Density
1	DDR RAM	Standard configuration - 256 MB

Table 18: DDR Options

4.7 Switches

The Centauri 200 has two tactile switches on the front panel. These switches are completely user configurable and users can use it as per their use case. Figure 5-6 describes switches on Centauri 200.

Figure 12 : User Configurable Switches

4.8 LED's

The Centauri 200 has three inbuilt LED's. One LED is used to indicate whether the Centauri 200 is powered ON or OFF and the remaining two are user configurable. The user can use these two LED's as per their use case. Figure 5-7 shows the location of these LED's on the Centauri 200.

Figure 13 : LED's on Centauri 200

Sr No	LED	LED Colour	Function
1	PWR	Green	ON: Centauri 200 powered ON
			OFF: Centauri 200 powered OFF
2	LED1 & LED2	Bi-colour	Status: User configurable

Table 7: LED's

4.9 IO Table

Below table describes the IO interfacing to all the internal peripherals of the Centauri 200 and the IO addressing in Centauri 200 from the user perspective.

Sr.	Peripheral	Section	µP IO	µP Pad	Linux	Use
1	ORing Control	ORing	GPIO5_IO09	R6	IO137	ORing - Used to know which input source is switched when two voltage inputs are available.
2	RTC_INTA	ORing + RTC	GPIO1_IO04	M16	IO4	Used to enable/disable power to the USB type A connector.
3	EN_USB	USB	GPIO1_IO01	C15	IO1	Used to put the CT200 in master/slave mode.
4	USB_OTG_ID		GPIO1_IO00	K13	IO0	
5	USB_OTG_N		USB_OTG1_DN	T15	-	
6	USB_OTG_P		USB_OTG1_DP	U15	-	

7	CAN_PD	CAN	GPIO1_IO09	M15	IO9	Used to enable/disable CAN transmissions.
8	CAN_RX		UART3_RTS	G14	-	CAN Receive.
9	CAN_TX		UART3_CTS	H15	-	CAN Transmit.
10	BLE_RST	nRF52840 BLE	GPIO1_IO05	M17	IO5	Used to reset the on board BLE module.
11	BLE_INT		GPIO5_IO01	R9	IO129	
12	UART1_TX	nRF52840 BLE + MikroBUS1	UART1_TX_DATA	K14	-	UART1. Used to communicate with nRF58240 BLE module
13	UART1_RX		UART1_RX_DATA	K16	-	
14	UART1_RTS		UART1_RTS	J14	-	
15	UART1_CTS		UART1_CTS	K15	-	
16	SPI1_CLK	nRF52840 BLE + MikroBUS1 + MikroBUS2	ECSPI1_SCLK	D4	-	Serial Peripheral Interface (SPI) Bus.
17	SPI1_MOSI		ECSPI1_MOSI	D2	-	
18	SPI1_MISO		ECSPI1_MISO	D1	-	
19	SPI1_SS0		GPIO4_IO26	D3	IO122	Slave Select (SS) for SPI BUS.
20	SPI1_SS1	nRF52840	GPIO4_IO24	E1	IO120	
21	SWITCH_1	Switch	GPIO3_IO00	A8	IO64	User configurable switches.
22	SWITCH_2		GPIO5_IO00	R10	IO128	
23	LED_ST_2	LED's	GPIO4_IO17	F5	IO113	User configurable LED's.
24	LED_ST_3		GPIO4_IO18	E5	IO114	
25	LED_ST_4		GPIO5_IO07	N10	IO135	
26	LED_ST_5		GPIO5_IO08	N9	IO136	
27	WLAN_RST	Wi-Fi	GPIO4_IO19	F2	IO115	Used to reset on board
28	WLAN_DAT0		usdhc1_DAT0	B3	-	Used for communicating with the Wi-Fi section of the on board Wi-Fi combo module.
29	WLAN_DAT1		usdhc1_DAT1	B2	-	
30	WLAN_DAT2		usdhc1_DAT2	B1	-	
31	WLAN_DAT3		usdhc1_DAT3	A2	-	
32	WLAN_CMD		usdhc1_CMD	C2	-	
33	WLAN_CLK		usdhc1_CLK	C1	-	
34	BT_RST		GPIO4_IO20	F3	IO116	Used to reset BT/BLE section of the on board
35	BT_WAKE		GPIO5_IO02	P11	IO130	Used to wake BT/BLE section of the on board
36	WLAN_TX		UART2_TX_DATA	J17	-	UART2 interface. Used for communicating with the BT/BLE section of the on board Wi-Fi
37	WLAN_RX		UART2_RX_DATA	J16	-	
38	WLAN_CTS		UART2_CTS	H14	-	
39	WLAN_RTS		UART2_RTS	J15	-	
40	ZWave_RST	MikroBUS2	GPIO4_IO21	E4	IO117	Reset IO for MikroBUS
41	ZWave_INT		GPIO5_IO04	P9	IO132	Interrupt IO for MikroBUS module.
42	BOOT_MODE	Boot config selector	SRC_BOOT_MODE	T10	-	Used for selecting boot mode configuration.
43	BOOT_MODE		SRC_BOOT_MODE	U10	-	
44	RS485_DIR	RS485/	GPIO4_IO14	B5	IO110	Used to enable/disable
45	RS485_RX		UART5_RX_DATA	G13	-	UART5 interface for

46	RS485_TX		UART5_TX_DATA	F17	-	
47	LTE_DM	LTE	USB_OTG2_DN	T13	-	USB interface for communicating with the
48	LTE_DP		USB_OTG2_DP	U13	-	
49	LTE_NETW		GPIO4_IO23	E2	IO119	Used to get network status.
50	LTE_STATUS		GPIO3_IO03	C9	IO67	Used to get status of the module.
51	LTE_PWR_KEY		GPIO3_IO02	D9	IO68	Used to turn the module ON/OFF.
52	LTE_RST		GPIO4_IO22	E3	IO118	Used to reset the LTE module.
53	EN_LTE_LDO		GPIO5_IO03	P10	IO131	Used to enable/disable power to the LTE module.
54	SCL	PMIC, RTC, EEPROM,	I2C_SCL	L14	-	I2C interface.
55	SDA		I2C_SDA	L17	-	
56	UART3_TX	MikroBUS2	UART3_TX_DATA	H17	-	UART3 Interface.
57	UART3_RX		UART3_RX_DATA	H16	-	
58	UART3_RTS	MikroBUS2/ CAN	UART3_RTS	G14	-	
59	UART3_CTS		UART3_CTS	H15	-	
60	UART4_TX	Debug header	UART4_TX_DATA	G17	-	UART4 interface. Used for debug.
61	UART4_RX		UART4_RX_DATA	G16	-	

Table 8: IO on Centauri 200

5 ELECTRICAL THERMAL & ANTENNA RANGE CHARACTERISTICS

5.1 Recommended Operating Conditions

Sr No	Description	Value			Unit
		Minimum	Typical	Maximum	
1	Operating voltage	4.75	5	5.5	V
2	Current consumption	-	-	3	A
3	Operating temperature range (ambient)	-10	25	65	°C

Table 9: Recommended Operating Conditions

5.2 Thermal Analysis data

Thermal analysis of CT200 was done with 4 different configuration as per below table.

Sr. No.	Objective	Processor Temperature	Ambient Temperature
1	CPU Runs in normal Condition	81 °C	65 °C
2	CPU run at 33%	84 °C	65 °C
3	CPU run at 66%	86 °C	65 °C
4	CPU run at 100%	92 °C	65 °C

Table 10 : Thermal Analysis

Note : The CPU threshold limit of the processor is 100 °C. As CPU temperature increased to 100 °C then processor will shutdown the PMIC and all the interfaces are down till the temperature reaches to 25 °C.

5.3 Range for CT200

Range of CT200 device for BLE and Wi-Fi interface. The below table shows the range test data.

Sr. No.	RF Module	RF Power (dBm)	Max Range (m)	Antenna
1	Wi-Fi (AP6212)	14	200	Internal
2	BLE (nRF52840)	8	145	Internal
3	Wi-Fi (AP6212)	14	200	External WHIP Antenna
4	BLE (nRF52840)	8	145	External Patch Antenna
5	Zwave (ZGM130S)	14	130	External Patch Antenna

Table 11 : Range Test

6 MECHANICAL DIMENSIONS

The table top dimensions of Centauri 200 are 100 x 150 x 30 mm (L x W x H). Figure 7-1 shows the dimensions in more detail.

Note: All dimensions are in millimetre (mm), unless otherwise specified.

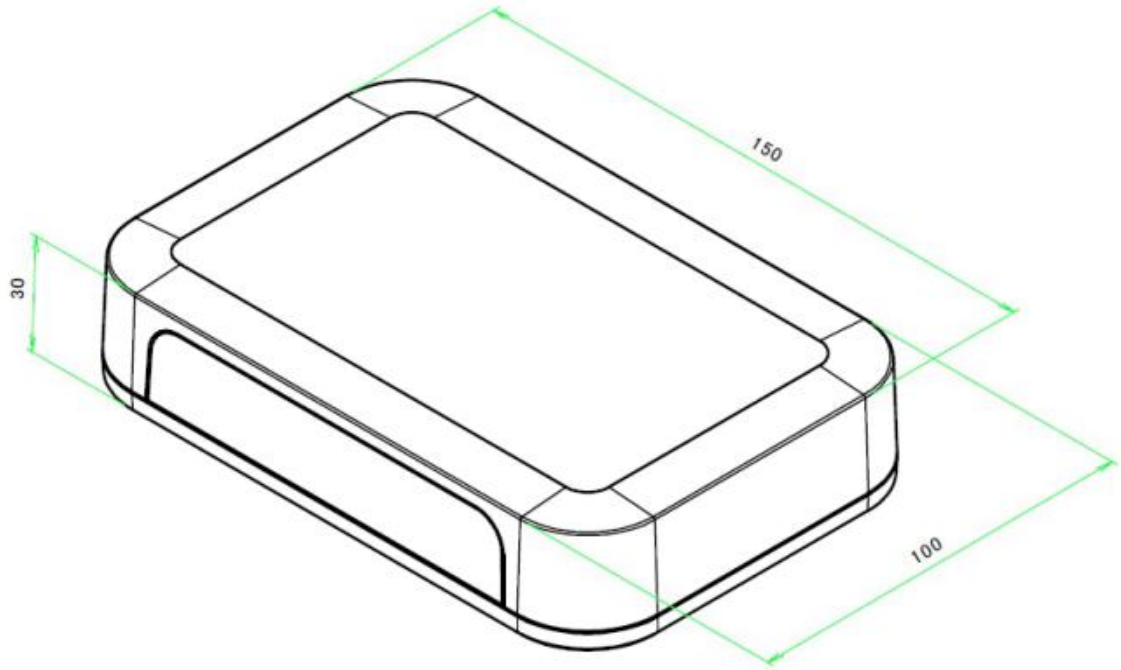

Figure 14 : Centauri 200 Dimensions table top

The table wall mount dimensions of Centauri 200 are 180 x 100 x 30 mm (L x W x H). Figure 7-1 shows the dimensions in more detail.

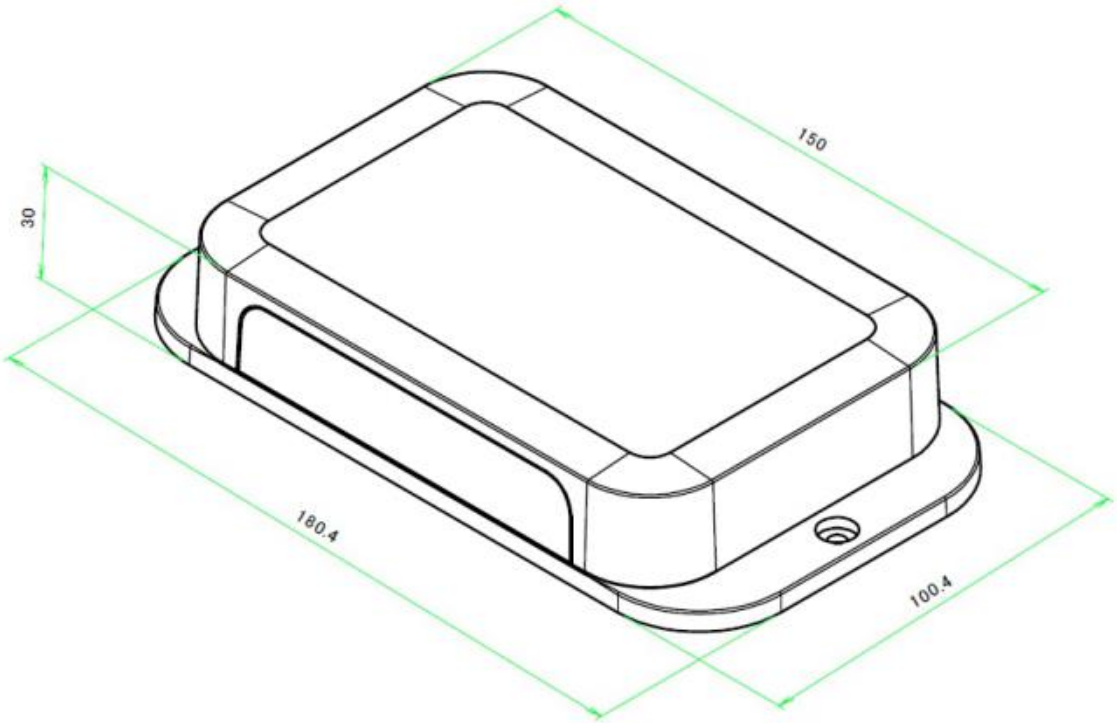

Figure 15 : Centauri 200 Dimensions wall mount

7 CERTIFICATION

7.1 FCC (Federal Communications Commission) & IC (Industry Canada)

This equipment complies with FCC and IC radiation exposure limits set forth for an uncontrolled environment. This equipment should be installed and operated with minimum distance of 20 cm between the radiator and your body. This transmitter must not be co-located or operating in conjunction with any other antenna or transmitter.

This device complies with part 15 of the FCC rules and RSS-247 of Industry Canada. Operation is subject to the following two conditions: (1) this device may not cause harmful interference, and (2) this device must accept any interference received, including interference that may cause undesired operation.

Le présent appareil est conforme aux CNR d'Industrie Canada applicables aux appareils radio exempts de licence. L'exploitation est autorisée aux deux conditions suivantes : (1) l'appareil ne doit pas produire de brouillage, et (2) l'utilisateur de l'appareil doit accepter tout brouillage radioélectrique subi, même si le brouillage est susceptible d'en compromettre le fonctionnement.

This Class B digital apparatus complies with Canadian ICES-003. Cet appareil numérique de la classe B est **conforme à la norme NMB-003 du Canada.**

APPLICATION NOTES

Safety Precautions

These specifications are intended to preserve the quality assurance of products as individual components.

Before use, check and evaluate the module's operation when mounted on your products. Abide by these specifications when using the products. These products may short-circuit. If electrical shocks, smoke, fire, and/or accidents involving human life are anticipated when a short circuit occurs, then provide the following fail safe functions as a minimum:

1. Ensure the safety of the whole system by installing a protection circuit and a protection device.
2. Ensure the safety of the whole system by installing a redundant circuit or another system to prevent a single fault causing an unsafe status.

Design Engineering Notes

1. Heat is the major cause of shortening the life of the modules. Avoid assembly and use of the target

equipment in conditions where the product's temperature may exceed the maximum allowable.

2. Failure to do so may result in degrading of the product's functions and damage to the product.

3. If pulses or other transient loads (a large load applied in a short time) are applied to the products, before use, check and evaluate their operation when assembled onto your products.

4. These products are not intended for other uses, other than under the special conditions shown below. Before using these products under such special conditions, check their performance and reliability under the said special conditions carefully, to determine whether or not they can be used in such a manner.

5. In liquid, such as water, salt water, oil, alkali, or organic solvent, or in places where liquid may splash. In direct sunlight, outdoors, or in a dusty environment. In an environment where condensation occurs. In an environment with a high concentration of harmful gas (ex. salty air, HCl, Cl2, SO2, H2S, NH3, and NOx).

6. If an abnormal voltage is applied due to a problem occurring in other components or circuits, replace these products with new products because they may not be able to provide normal performance even if their electronic characteristics and appearances appear satisfactory.

7. Mechanical stress during assembly of the board and operation must be avoided.

8. Pressing on parts of the metal cover or fastening objects to the metal cover is not permitted.

Storage Conditions

1. The module must not be stressed mechanically during storage.

2. Do not store these products in the following conditions or the performance characteristics of the product, such as RF performance, may well be adversely affected:
   - Storage in salty air or in an environment with a high concentration of corrosive gas, such as Cl2, H2S, NH3, SO2 or NOx.
   - Storage (before assembly of the end product) for more than one year after the date of date of delivery even if all the above conditions have been met, should be avoided.

Datasheet

ZWave 700 Module

Revision: 2.3

Date: 13-Apr-2020

Volansys Technologies Private Limited
Block A 7th Floor, Safal Profitaire, Corporate Road,
Prahladnagar, Ahmedabad 380015, India
www.volansys.com
Phone: 91-79-4004-1994
Email: info@volansys.com

Confidentiality Notice

Copyright © 2019Volansys – All rights reserved.

This document is authored by Volansys and is Volansys' intellectual property, including the copyrights in all countries in the world. This document is provided under a license to use only with all other rights, including ownership rights, being retained by Volansys. This file may not be distributed, copied, or reproduced in any manner, electronic or otherwise, without the express written consent of Volansys.

TABLE OF CONTENTS

1 INTRODUCTION....4

1.1 PURPOSE....4
1.2 SCOPE....4
1.3 ACRONYMS AND ABBREVIATIONS....4
1.4 REFERENCES....4
1.5 DOCUMENT CONVENTIONS....4
1.6 COPYRIGHT INFORMATION....4
1.7 WARRANTY....5

2 PRODUCT OVERVIEW....6

2.1 MODULE FEATURES....8
2.2 SUGGESTED APPLICATIONS....8
2.3 MODULE PIN DETAILS....10
2.4 MODULE PIN DETAILS....11
2.5 ANTENNA....15
2.6 MODULE POWER ON/OFF....17
2.7 MODULE RESET....17
2.8 DEBUG AND PROGRAMMING....18

3 ELECTRICAL CHARACTERISTICS....23

3.1 ABSOLUTE MAXIMUM RATINGS....23
3.2 RECOMMENDED OPERATING CONDITIONS....24
3.3 RF CHARACTERISTICS....24
3.4 RF RANGE....26
3.5 MODULE DIMENSIONS....27

4 CERTIFICATIONS....29

5 APPLICATION NOTE....30

5.1 SAFETY PRECAUTIONS....30
5.2 DESIGN ENGINEERING NOTES....30
5.3 STORAGE CONDITIONS....31

List of Figures

Figure 2-1 : ZWave 700 Module Block Diagram....6
Figure 2 -2 Zwave with SAW Filter....7
Figure 3 -3 : Without SAW filter and with SAW filter.... 8
Figure 2-4 : Module Pin Details....10
Figure 2-5 : Antenna Connector.... 15
Figure 2-6 : Flex Patch Antenna - 1....16
Figure 2-7 : Flex Patch Antenna - 2....16
Figure 2-8 : Module Power ON/OFF Pin.... 17
Figure 2-9 : ZWave 700 Module Programming Interface....18
Figure 2-10 : SLWSTK6050A EVK For ZWave 700 Modules.... 19
Figure 2-11 : Simplicity Studio Launch....19
Figure 2-12 : Simplicity Studio - Add Products....20
Figure 2-13 : Simplicity Studio - My Products.... 20
Figure 2-14 : Simplicity Studio - Connect JTAG/SWD.... 21
Figure 2-15 : Simplicity Studio - Location of Binary Files.... 21
Figure 2-16 : Simplicity Studio - Select Binary Files.... 22
Figure 2-17 : Simplicity Studio - Flash Binary Files.... 22
Figure 3-1 : RF Range Test Data.... 26
Figure 3-2 : ZWave 700 Module - Dimensions (for mounting on female headers)....27
Figure 3-3 : ZWave 700 Module - Dimensions (for assembly using wave soldering)....28

List of Tables

Table 1 : Acronyms and Abbreviations....4
Table 2 : References....4
Table 3 : Module Options.... 7
Table 4 : Module Pin Details.... 10
Table 5 : IO Alternate functionalities.... 14
Table 6 : Absolute Maximum Ratings....23
Table 7 : Recommended Operating Conditions....24
Table 8 : RF Characteristics - Receiver....25
Table 9 : RF Characteristics - Transmitter....25

Revision History

Revision	Date	Details of change	Author	Reviewer	Approver
1.0	23-12-19	Initial Draft	SD	JB	JB
2.0	13-01-20	Initial Draft - Updated the document as per the PCB revision 2.0	SD	KB	KB
2.1	13-03-20	Added Volansy's SKU in table 3.	SD	KB	KB
2.2	13-04-20	Added antennas to section 2.6 and added range test section 3.4	SD	KB	KB
2.3	06-03-2021	Added saw filter, Changed shield	YP	YP	KB

1 INTRODUCTION

1.1 Purpose

The purpose of this document is to provide introduction to key features, architecture and other relevant electrical and mechanical characteristics of ZWave 700 module.

1.2 Scope

The scope of this document is to explain in detail the design of the ZWave 700 module. This document is henceforth, to be used as a direct reference by end customers intending to use this product as per their use case.

1.3 Acronyms and abbreviations

Terms	Definition
NC	Not Connected
NP	Not Present
PCB	Printed Circuit Board
FER	Frame Error Rate
IO	Input Output
TBD	To Be Defined
RF	Radio Frequency

Table 1: Acronyms and Abbreviations

1.4 References

Reference Document Title	Provided By	Remarks
Schematics Design	Volansys	Primary reference
Layout Design	Volansys	N/A

Table 2: References

1.5 Document Conventions

Note:

A requirement may include an explanation of the requirement or the interaction between requirements, or other information useful in determining the intent of the requirement. The note, however, is not part of the requirement. Notes are indicated by the prefix “Note”, by verbs other than “shall,” or by enclosure in parentheses.

1.6 Copyright Information

The information contained in this document is the proprietary information of Volansys Technology. The contents are confidential and any disclosure to persons other than the officers, employees, agents or subcontractors of the owner or licensee of this document, without the prior written consent of Volansys, is strictly prohibited.

Further, no portion of this document may be reproduced, stored in a retrieval system, or transmitted in any form or by any means, electronic or mechanical, including photocopying and recording, without the prior written consent of Volansys, the copyright holder.

Volansys publishes this document without making any warranty as to the content contained herein. Further Volansys reserves the right to make modifications, additions and deletions to this document due to typographical errors, inaccurate information, or improvements to reference design platforms or products mentioned in the document at any time and without notice. Such changes will, nevertheless be incorporated into new editions of this document.

1.7 Warranty

For details on the Volansys ZWave 700 module warranty policy, please Email us on :- Business@volansystech.com

2 Product Overview

The ZWave 700 module is based on the Silicon Labs ZGM130S SiP module supporting the newer Z Wave 700 protocol and is a fully integrated ZWave module enabling rapid development of ZWave based solutions.

The ZWave 700 module is built with low power gecko technology and is an ideal solution for energy friendly smart home control applications such as motion sensors, door/window sensors, access control, appliance control, energy management, etc in the “Internet of Things”.

The ZWave 700 module is fully complaint with MikroBUS standard.

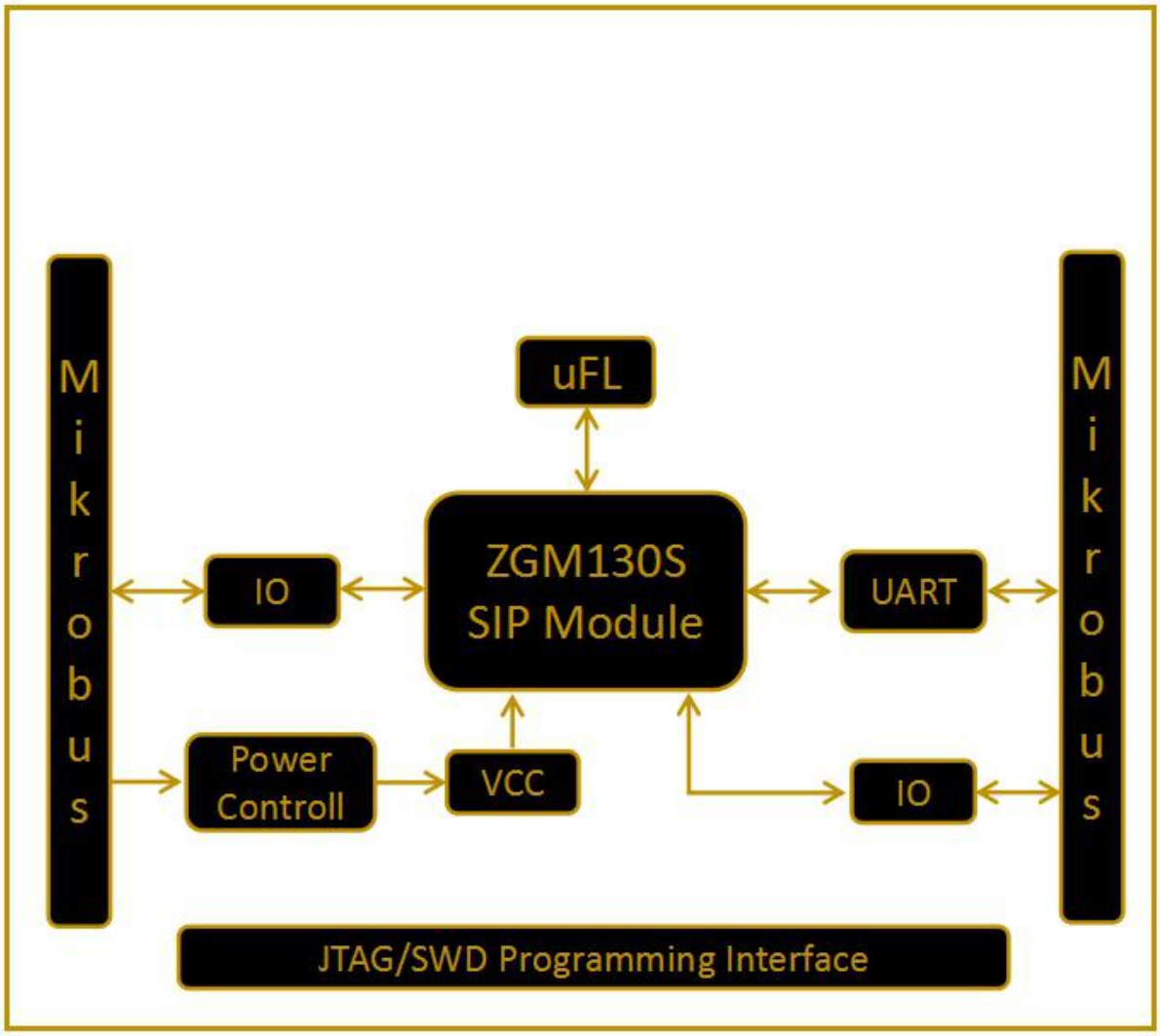

Figure 2-1: ZWave 700 Module Block Diagram

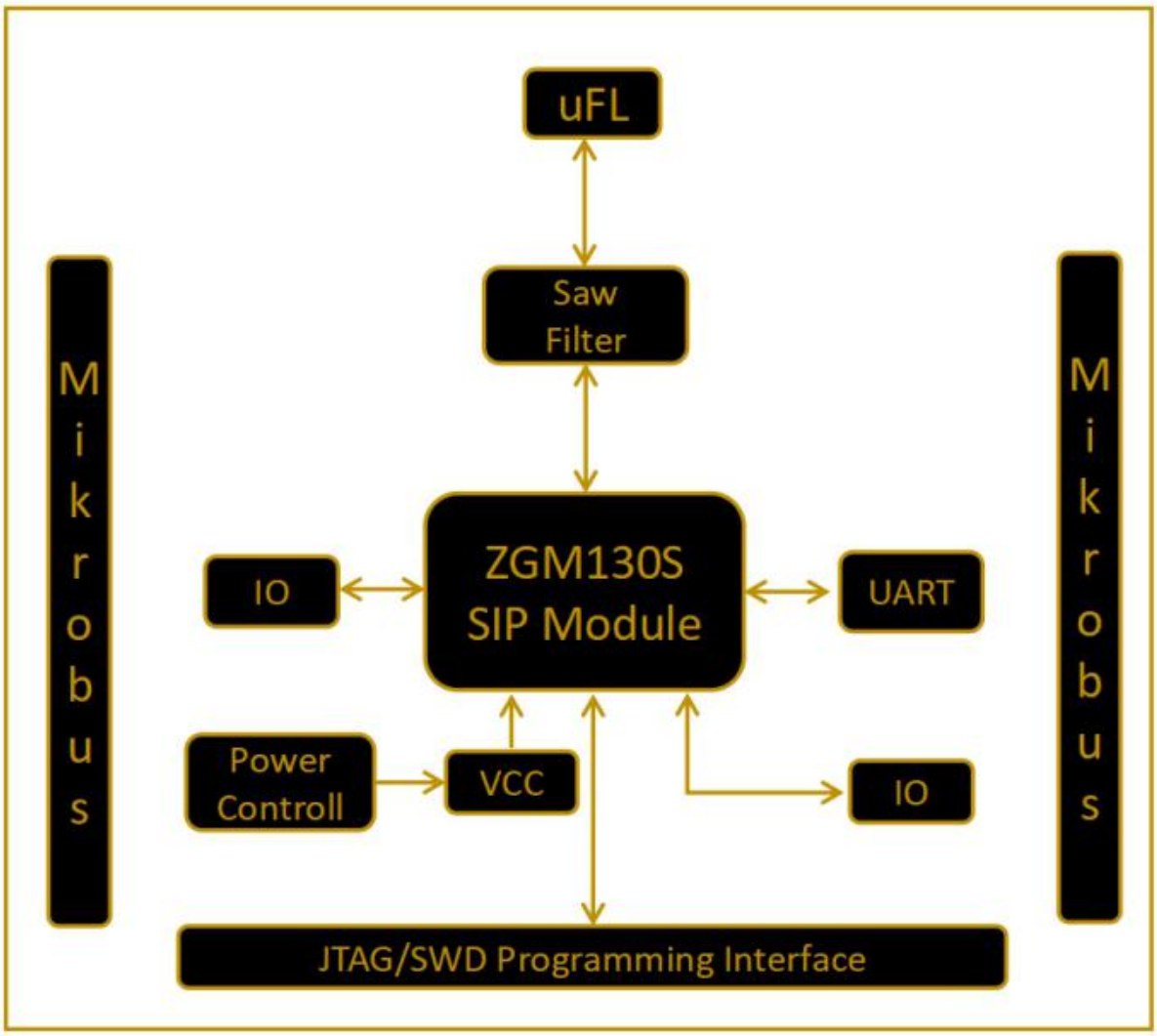

Figure 2-2 Zwave with SAW Filter

Sr	Volansys SKU	Description
1	MS-ZGM130S-WP-E-02-TH-NS	Module without power control integrated pin without SAW
2	MS-ZGM130S-WP-E-02-TH-WS	Module without power control integrated pin wave solderable. Without SAW
3	MS-ZGM130S-WP-E-03-TH-NS	Module without power control integrated pin SAW Filter

Table 3: Module Options

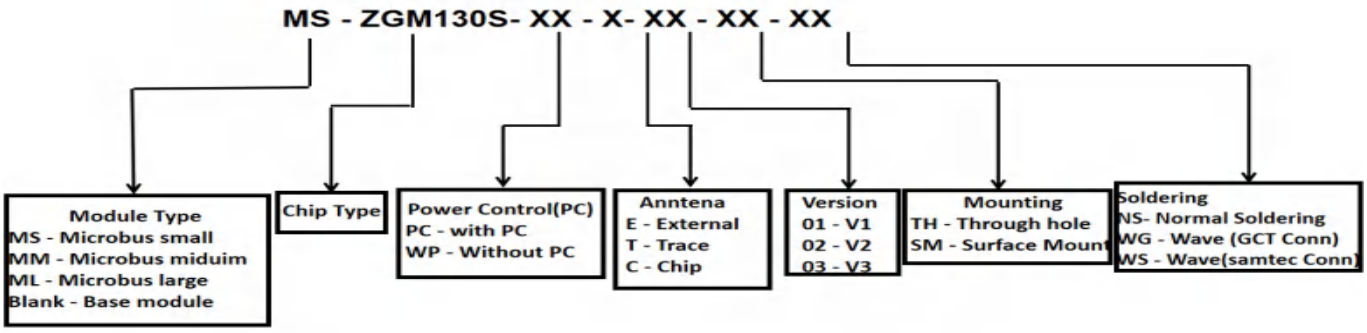

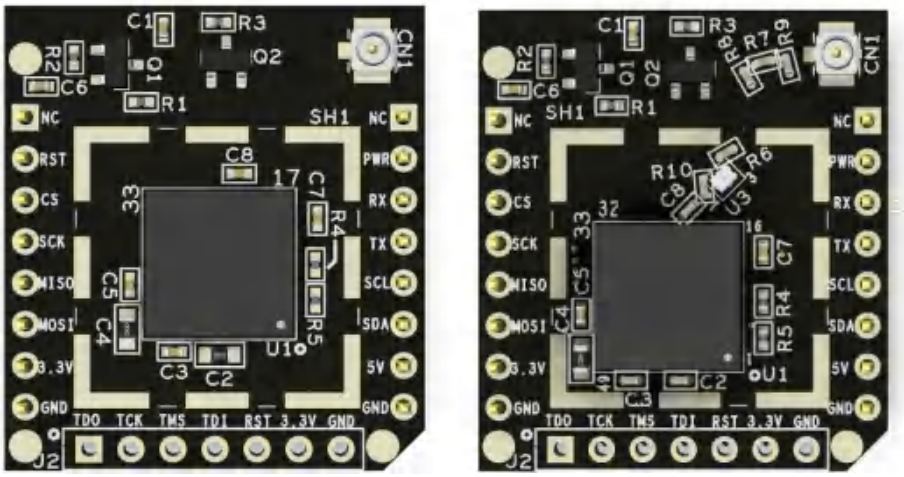

Figure 3-3 : Without SAW filter and with SAW filter

2.1 Module Features

- MikroBUS compatible
- 6 general purpose IOs
- Module ON/OFF control through IO pin
- ZWave 9.6/40/100 kbps data rates
- Supports all Zwave Sub-GHz bands (865.2 MHz - 926.3 MHz)
- TX power up to 13 dBm
- Range greater than 100 meters
- -97.9 dBm sensitivity at 100 kbps GFSK
- 9.8 mA RX current at 100 kbps GFSK
- 13.3 mA TX current at 0 dBm output power
- ARM Cortex - M4+ floating point unit @ 39 MHz
- 64 KB application and ZWave framework flash
- 8 KB application RAM

2.2 Suggested Applications

- Smart homes
- Security

- Lighting
- Health and wellness
- Metering
- Building automation

2.3 Application of SAW filters in Zwave

In several regions, upload in the LTE band occurs at frequencies located closer than 10 MHz from frequencies used by Z-Wave. Due to the high power level allowed, in addition to the loose restrictions on side band emissions granted to the LTE band, the LTE upload may interfere significantly with the operation of a listening Z-Wave node located nearby.

To reduce the impact from other devices, the Z-wave device must incorporate a SAW filter which attenuates these technologies, thus preventing saturation of the receiver.

The effects of interference from LTE is outlined in LTE Case Study.

For Z-Wave gateways (outside EU freq.) with LTE embedded, it is recommended to analyze the specific need for a SAW filter in depth. Optionally, a SAW filter bank can be added and controlled via the SAW0 and SAW1 output pins for operation in different regions

This means:

No SAW

End-devices and gateways without LTE modem embedded no SAW filter is recommend.

Gateways on EU frequency with LTE modem embedded no SAW filter is recommend.

SAW recommended

Gateways with LTE embedded on U and H related frequencies using a SAW filter is recommend.

2.4 Module Pin Details

The pin detail for the ZWave 700 module is as described below:

Note: All the pin marked as "IOx" are multiplexed internally and can be used to realise interfaces as per the details mentioned in table 5.

Module Pin Name	Pin		mikro BUS			Pin	Module Pin Name
J1.1	NC	1	AN	PWM	16	NC	J3.1
J1.2	RST	2	RST	INT	15	PWR	J3.2
J1.3	IO1	3	CS	RX	14	RX	J3.3
J1.4	IO2	4	SCK	TX	13	TX	J3.4
J1.5	IO3	5	MISO	SCL	12	IO6	J3.5
J1.6	IO4	6	MOSI	SDA	11	IO5	J3.6
J1.7	3.3V	7	3.3V	5V	10	NC	J3.7
J1.8	GND	8	GND	GND	9	GND	J3.8

Table 4: Module Pin Details

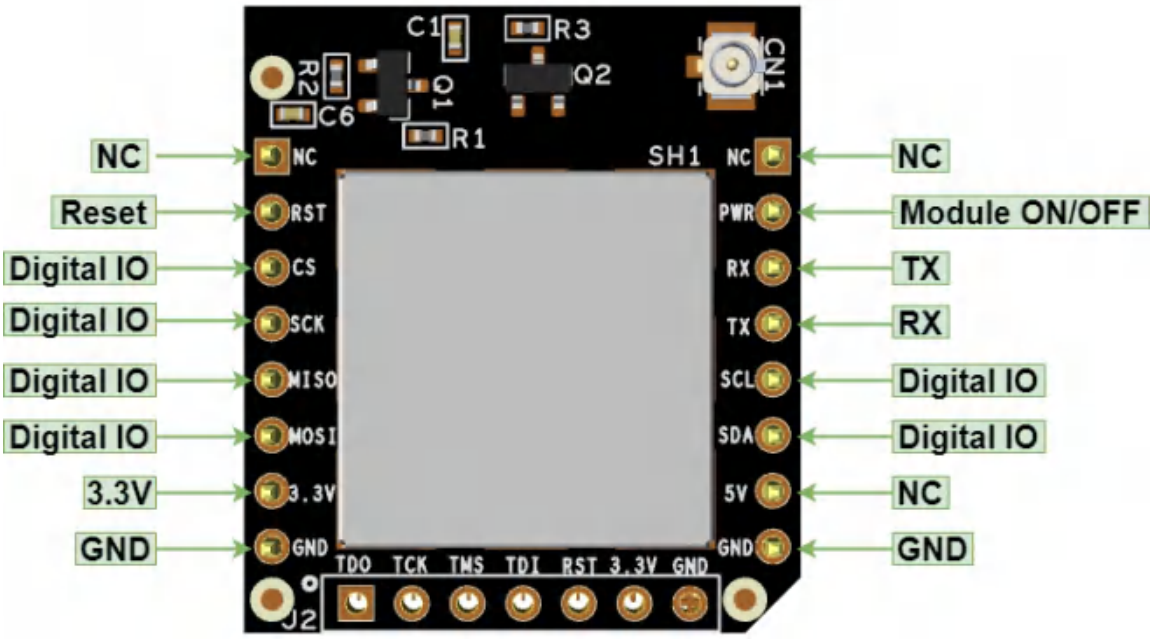

Figure 2-4: Module Pin Details

2.5 Module Pin Details

By default, the ZWave 700 module is configured to communicate with the host using the UART interface which is available on the pins 3 and 4 on the header "J3". Refer to figure 2 for location of these pins.

The Zwave 700 module also has total of 6 pins which can be used as general purpose IO pins. These IOs are also internally multiplexed in the ZGM130S SiP module and can be programmed to operate as either IOs or interface pins. Interfaces such as I^2C, SPI, UART can be realised using this feature on any of the 6 available IOs. Table below shows the pin muxing details of each of the 6 available IOs. This feature proves itself useful when realising end device use cases with the ZWave 700 module.

IO No.	Pin No.	Pin	Pin Alternate Functionalities				
			Analog	Timer	Communication	Radio	Other
IO1	J1.3	PA2	VDAC0_OUT1ALT / OPA1_OUTALT #1 BUSDY BUSCX OPA0_P	TIM0_CC0 #2 TIM0_CC1 #1 TIM0_CC2 #0 TIM0_CDTI0 #31 TIM0_CDTI1 #30 TIM0_CDTI2 #29 TIM1_CC0 #2 TIM1_CC1 #1 TIM1_CC2 #0 TIM1_CC3 #31 WTIM0_CC0 #2 WTIM0_CC1 #0 LETIM0_OUT0 #2 LETIM0_OUT1 #1 PCNT0_S0IN #2 PCNT0_S1IN #1	US0_TX #2 US0_RX #1 US0_CLK #0 US0_CS #31 US0_CTS #30 US0_RTS #29 US1_TX #2 US1_RX #1 US1_CLK #0 US1_CS #31 US1_CTS #30 US1_RTS #29 LEU0_TX #2 LEU0_RX #1 I2C0_SDA #2 I2C0_SCL #1	FRC_DCLK #2 FRC_DOUT #1 FRC_DFRAME #0 MODEM_DCLK #2 MODEM_DIN #1 MODEM_DOUT #0	PRS_CH6 #2 PRS_CH7 #1 PRS_CH8 #0 PRS_CH9 #10 ACMP0_O #2 ACMP1_O #2 LES_CH10

IO2	J1.4	PA3	BUSCY BUSDX VDAC0_OUT0 / OPA0_OUT	TIM0_CC0 #3 TIM0_CC1 #2 TIM0_CC2 #1 TIM0_CDTI0 #0 TIM0_CDTI1 #31 TIM0_CDTI2 #30 TIM1_CC0 #3 TIM1_CC1 #2 TIM1_CC2 #1 TIM1_CC3 #0 WTIM0_CC0 #3 WTIM0_CC1 #1 LETIM0_OUT0 #3 LETIM0_OUT1 #2 PCNT0_S0IN #3 PCNT0_S1IN #2	US0_TX #3 US0_RX #2 US0_CLK #1 US0_CS #0 US0_CTS #31 US0_RTS #30 US1_TX #3 US1_RX #2 US1_CLK #1 US1_CS #0 US1_CTS #31 US1_RTS #30 LEU0_TX #3 LEU0_RX #2 I2C0_SDA #3 I2C0_SCL #2	FRC_DCLK #3 FRC_DOUT #2 FRC_DFRAME #1 MODEM_DCLK #3 MODEM_DIN #2 MODEM_DOUT #1	PRS_CH6 #3 PRS_CH7 #2 PRS_CH8 #1 PRS_CH9 #0 ACMP0_O #3 ACMP1_O #3 LES_CH11 GPIO_EM4WU8
IO3	J1.5	PA4	VDAC0_OUT1ALT / OPA1_OUTALT #2 BUSDY BUSCX OPA0_N	TIM0_CC0 #4 TIM0_CC1 #3 TIM0_CC2 #2 TIM0_CDTI0 #1 TIM0_CDTI1 #0 TIM0_CDTI2 #31 TIM1_CC0 #4 TIM1_CC1 #3 TIM1_CC2 #2 TIM1_CC3 #1 WTIM0_CC0 #4 WTIM0_CC1 #2 WTIM0_CC2 #0 LETIM0_OUT0 #4 LETIM0_OUT1 #3 PCNT0_S0IN #4 PCNT0_S1IN #3	US0_TX #4 US0_RX #3 US0_CLK #2 US0_CS #1 US0_CTS #0 US0_RTS #31 US1_TX #4 US1_RX #3 US1_CLK #2 US1_CS #1 US1_CTS #0 US1_RTS #31 LEU0_TX #4 LEU0_RX #3 I2C0_SDA #4 I2C0_SCL #3	FRC_DCLK #4 FRC_DOUT #3 FRC_DFRAME #2 MODEM_DCLK #4 MODEM_DIN #3 MODEM_DOUT #2	PRS_CH6 #4 PRS_CH7 #3 PRS_CH8 #2 PRS_CH9 #1 ACMP0_O #4 ACMP1_O #4 LES_CH12

IO4	J1.6	PA5	VDAC0_OUT0ALT / OPA0_OUTALT #0 BUSCY BUSDX	TIM0_CC0 #5 TIM0_CC1 #4 TIM0_CC2 #3 TIM0_CDTI0 #2 TIM0_CDTI1 #1 TIM0_CDTI2 #0 TIM1_CC0 #5 TIM1_CC1 #4 TIM1_CC2 #3 TIM1_CC3 #2 WTIM0_CC0 #5 WTIM0_CC1 #3 WTIM0_CC2 #1 LETIM0_OUT0 #5 LETIM0_OUT1 #4 PCNT0_S0IN #5 PCNT0_S1IN #4	US0_TX #5 US0_RX #4 US0_CLK #3 US0_CS #2 US0_CTS #1 US0_RTS #0 US1_TX #5 US1_RX #4 US1_CLK #3 US1_CS #2 US1_CTS #1 US1_RTS #0 US2_TX #0 US2_RX #31 US2_CLK #30 US2_CS #29 US2_CTS #28 US2_RTS #27 LEU0_TX #5 LEU0_RX #4 I2C0_SDA #5 I2C0_SCL #4	FRC_DCLK #5 FRC_DOUT #4 FRC_DFRAME #3 MODEM_DCLK #5 MODEM_DIN #4 MODEM_DOUT #3	CMU_CLKI0 #4 PRS_CH6 #5 PRS_CH7 #4 PRS_CH8 #3 PRS_CH9 #2 ACMP0_O #5 ACMP1_O #5 LES_CH13 ETM_TCLK #1
IO5	J3.6	PF5	BUSAY BUSBX	TIM0_CC0 #29 TIM0_CC1 #28 TIM0_CC2 #27 TIM0_CDTI0 #26 TIM0_CDTI1 #25 TIM0_CDTI2 #24 TIM1_CC0 #29 TIM1_CC1 #28 TIM1_CC2 #27 TIM1_CC3 #26 LETIM0_OUT0 #29 LETIM0_OUT1 #28 PCNT0_S0IN #29 PCNT0_S1IN #28	US0_TX #29 US0_RX #28 US0_CLK #27 US0_CS #26 US0_CTS #25 US0_RTS #24 US1_TX #29 US1_RX #28 US1_CLK #27 US1_CS #26 US1_CTS #25 US1_RTS #24 US2_TX #18 US2_RX #17 US2_CLK #16 US2_CS #15 US2_CTS #14 US2_RTS #13 LEU0_TX #29 LEU0_RX #28 I2C0_SDA #29 I2C0_SCL #28	FRC_DCLK #29 FRC_DOUT #28 FRC_DFRAME #27 MODEM_DCLK #29 MODEM_DIN #28 MODEM_DOUT #27	PRS_CH0 #5 PRS_CH1 #4 PRS_CH2 #3 PRS_CH3 #2 ACMP0_O #29 ACMP1_O #29

IO6	J3.5	PF4	BUSBY BUSAX	TIM0_CC0 #28 TIM0_CC1 #27 TIM0_CC2 #26 TIM0_CDTI0 #25 TIM0_CDTI1 #24 TIM0_CDTI2 #23 TIM1_CC0 #28 TIM1_CC1 #27 TIM1_CC2 #26 TIM1_CC3 #25 LETIM0_OUT0 #28 LETIM0_OUT1 #27 PCNT0_S0IN #28 PCNT0_S1IN #27	US0_TX #28 US0_RX #27 US0_CLK #26 US0_CS #25 US0_CTS #24 US0_RTS #23 US1_TX #28 US1_RX #27 US1_CLK #26 US1_CS #25 US1_CTS #24 US1_RTS #23 US2_TX #17 US2_RX #16 US2_CLK #15 US2_CS #14 US2_CTS #13 US2_RTS #12 LEU0_TX #28 LEU0_RX #27 I2C0_SDA #28 I2C0_SCL #27	FRC_DCLK #28 FRC_DOUT #27 FRC_DFRAME #26 MODEM_DCLK #28 MODEM_DIN #27 MODEM_DOUT #26	PRS_CH0 #4 PRS_CH1 #3 PRS_CH2 #2 PRS_CH3 #1 ACMP0_O #28 ACMP1_O #28

Table 5: IO Alternate functionalities

2.6 Antenna

The Zwave 700 module needs an external antenna to transmit and receive the Zwave RF traffic. The external antenna can be connected to the module using the U.FL connector marked “CN1” on the module. The antenna can be a patch, trace or whip antenna capable of resonating in the Zwave operating frequency range (865.2 - 926.3 MHz) and having an U.FL female connector for connecting to the RF path.

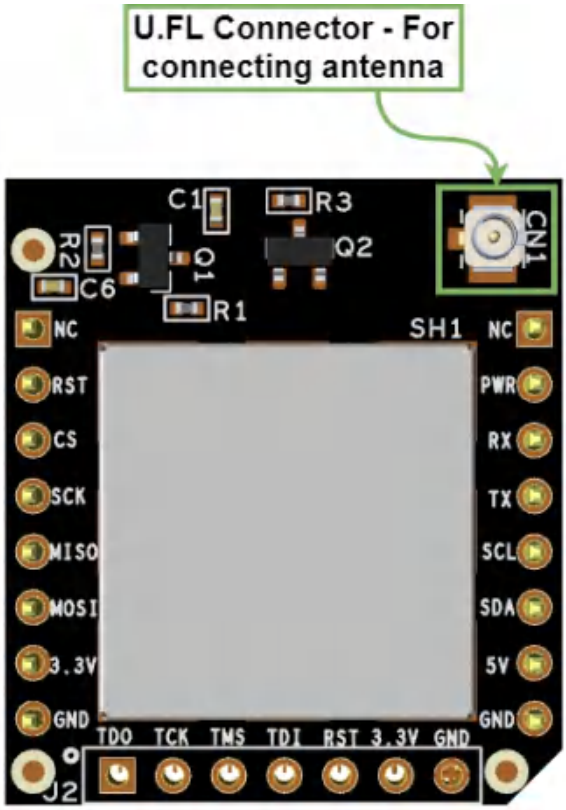

Figure 2-5: Antenna Connector

The Zwave 700 module is tested with the following two flex patch antennas.

W3312B0100 (Pulse Larsen Antennas)

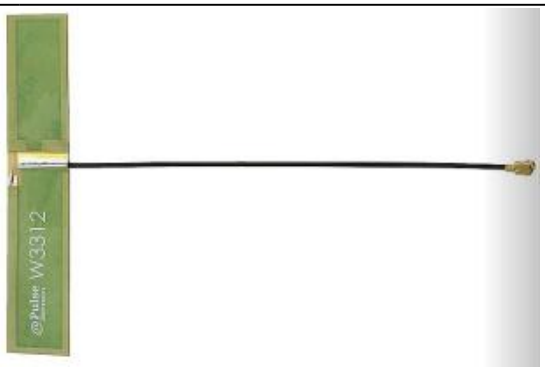

Figure 2-6: Flex Patch Antenna - 1

Following are the features of the antenna:

- Frequency range: 863 MHz - 928 MHz
- Number of bands: 2
- Return loss: -8 dB
- Gain: 0.8 dBi
- Termination: U.FL connector
- Mounting type: Adhesive
- Dimensions: 75 x 15 mm

2111400100 (Molex)

Figure 2-7: Flex Patch Antenna - 2

Following are the features of the antenna:

- Frequency range: 868 MHz - 928 MHz
- Number of bands: 2
- Return loss: -5 dB
- Gain: 1 dBi
- Termination: U.FL connector
- Mounting type: Adhesive
- Dimensions: 38 x 10 mm

2.7 Module Power ON/OFF

ZWave 700 module has a functionality through which a user can cycle power to the module. This can be done by using the pin 2 of the header "J3" (Pin 15 or INT in MikroBUS). A logic high (3.3V) at this pin will turn the module ON and a logic low (0V) at this pin will turn the module OFF. Continuous operation of the module will require a constant logic high at pin 2 of the header "J3"(Pin 15 or INT in MikroBUS). ZWave 700 module is also available with a direct power scheme if this functionality is not desired.

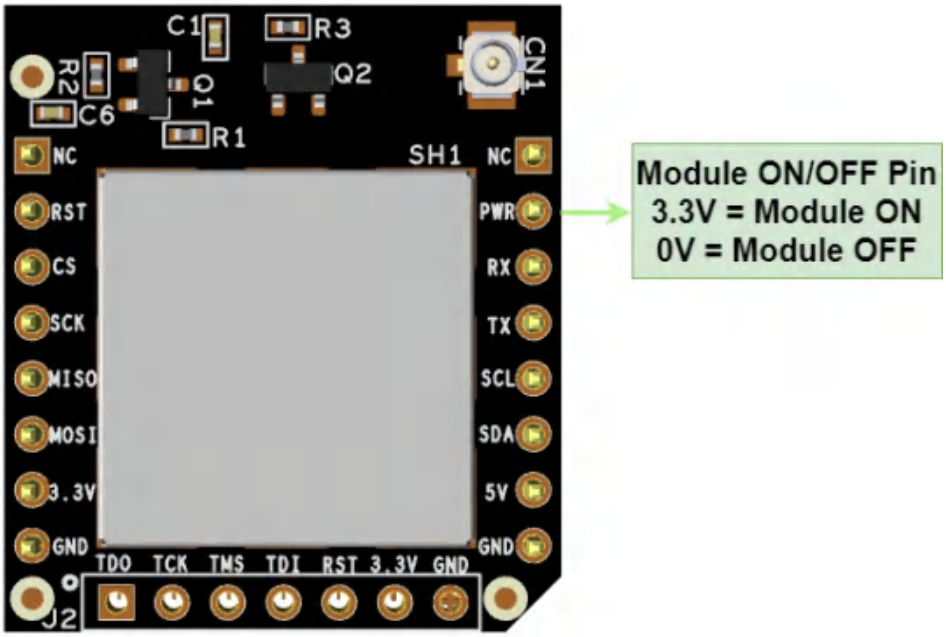

Figure 2-8: Module Power ON/OFF Pin

2.8 Module Reset

Pin 2 of the header "J2" (Pin 2 or RST in MikroBUS) is to be used for resetting the module externally. The reset input pin is active low. This pin is already pulled up internally and so would not require any external pull-up resistors on the host boards. To apply an external reset to this pin, only drive this pin low during reset and let the internal pull-up ensure that the reset is released.

2.9 Debug and Programming

Programming of the ZWave 700 module can be done through the JTAG/SWD interface provided on the header “J2”. The pin out of the programming header is shown in the figure 5 below.

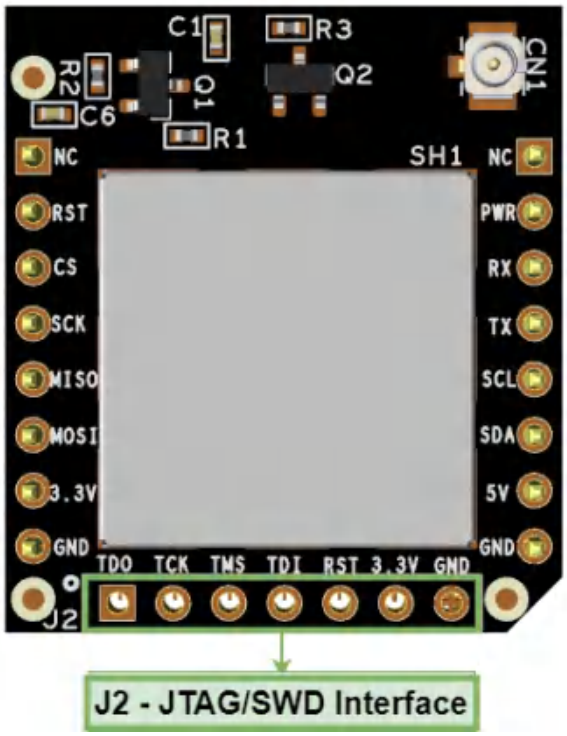

Figure 2-9: ZWave 700 Module Programming Interface

To program the Zwave 700 module, following are the prerequisites;

- Install Simplicity Studio version 4.1.11.4 on a Windows Machine.
- Install Flex SDK 2.6.2.0 and Gecko SDK Suite 2.6.2.
- Connect "Debug" header of the SLWSTK6050A with J2 interface of the ZWave 700 module using a compatible JTAG cable.

More information on the EVK SLWSTK6050A , please refer to UG381: ZGM130S Zen Gecko Wireless Starter Kit User's Guide available here,
https://www.silabs.com/documents/login/user-guides/ug381-brd4202a-user-guide.pdf

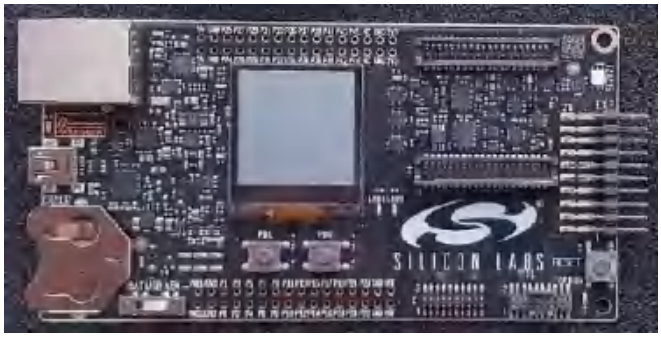

Figure 2-10: SLWSTK6050A EVK For ZWave 700 Modules

Follow the below mentioned steps to program a ZWave 700 module.

1. Launch simplicity studio in windows machine.

2. Select the EVK Kit to be used for flashing in the Simplicity Studio available at upper left corner as shown below.

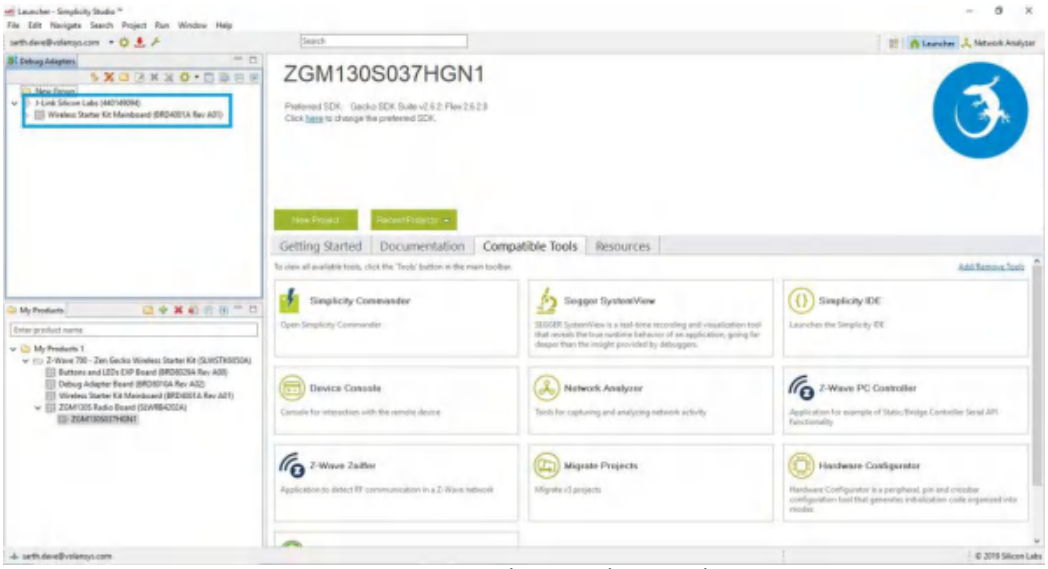

Figure 2-11: Simplicity Studio Launch

3. Select the compatible product in “My Products” Menu as shown below. In our case, it will be ZGM130S module.

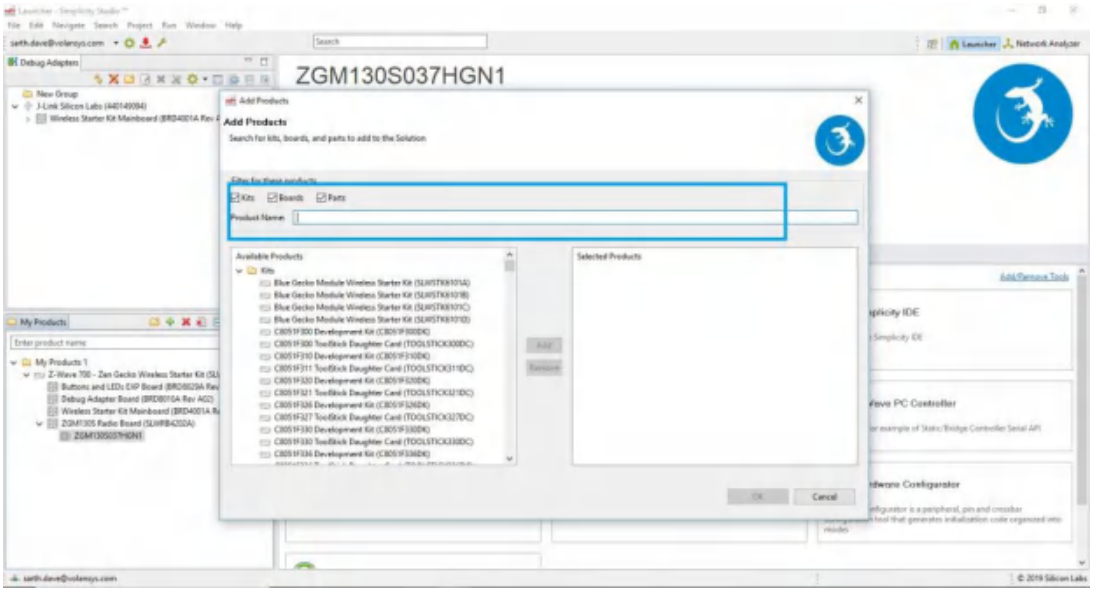

Figure 2-12: Simplicity Studio - Add Products

4. Once added, the selected product should be populated as shown below.

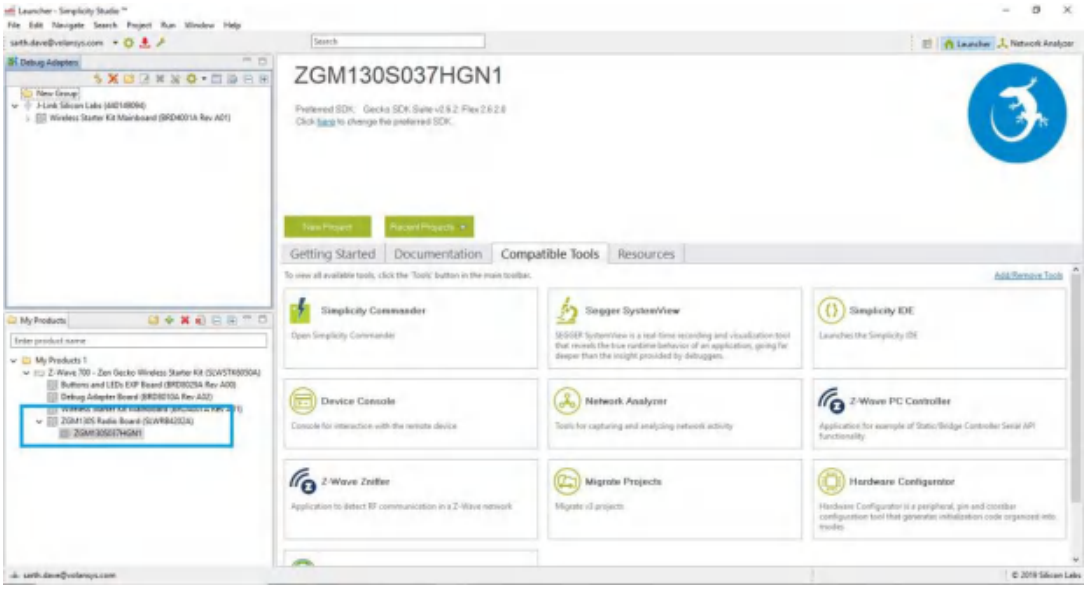

Figure 2-13: Simplicity Studio - My Products

5. To flash the Z-Wave-700 module, select “Simplicity Commander” from the Compatible Tools. Once done, it should launch the simplicity commander window.

6. Select the J-Link device connected to the machine as shown below and press Connect.

7. Connect ZGM130S module using the JTAG/SWD protocol at 8000KHz.If the module is detected on the JTAG/SWD interface, the device should appear as shown below.

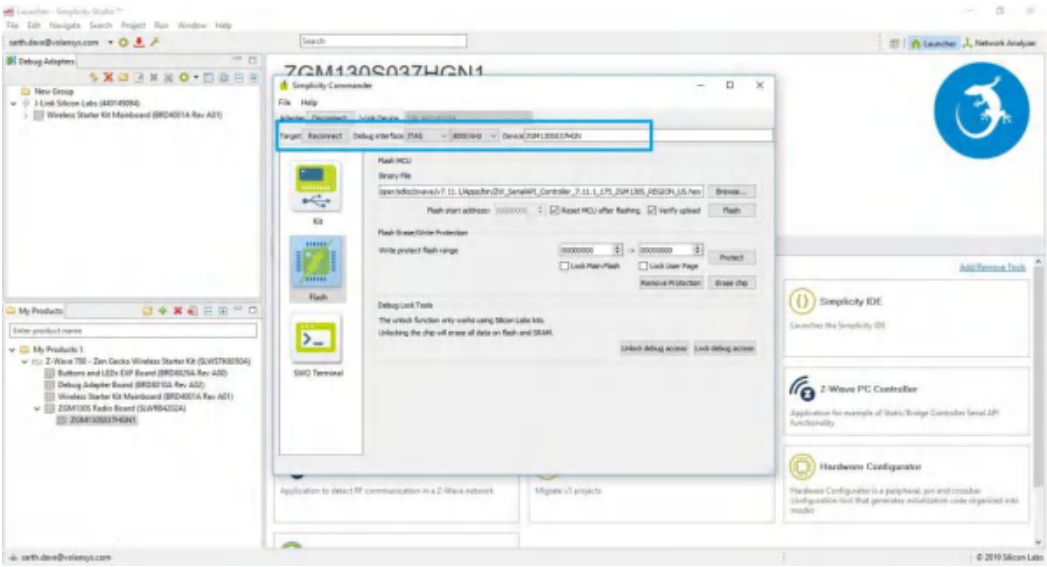

Figure 2-14: Simplicity Studio - Connect JTAG/SWD

8. Select the Flash option available in the left pane.

9. Once done, select the appropriate binary file to be flashed on the Z-wave-700 module as shown in below images.

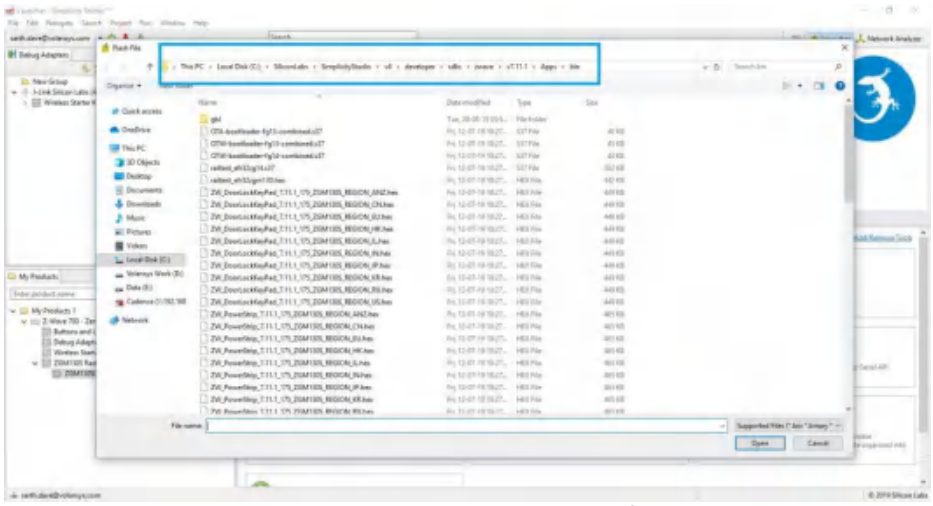

Figure 2-15: Simplicity Studio - Location of Binary Files

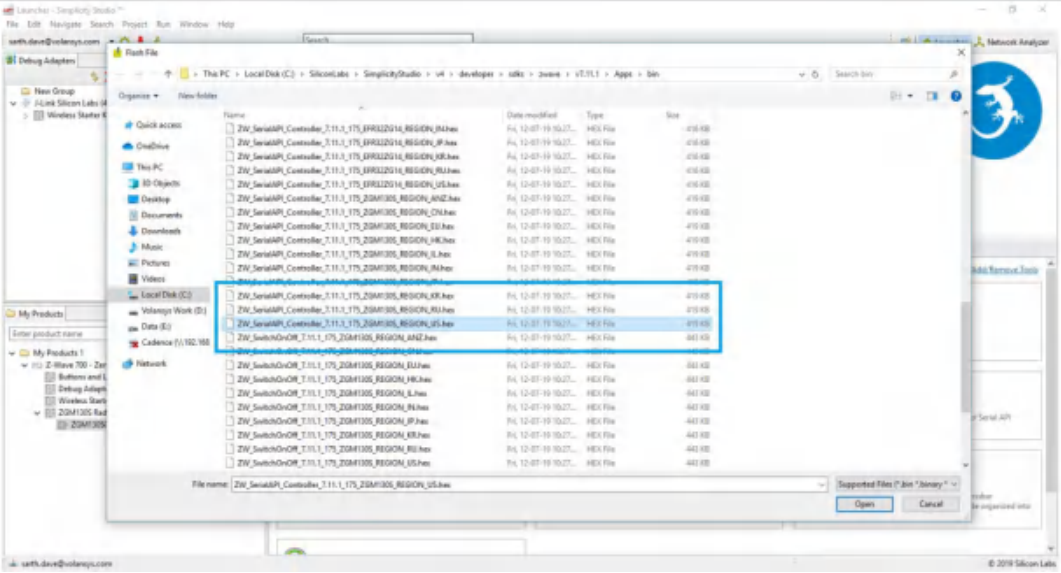

Figure 2-16: Simplicity Studio - Select Binary Files

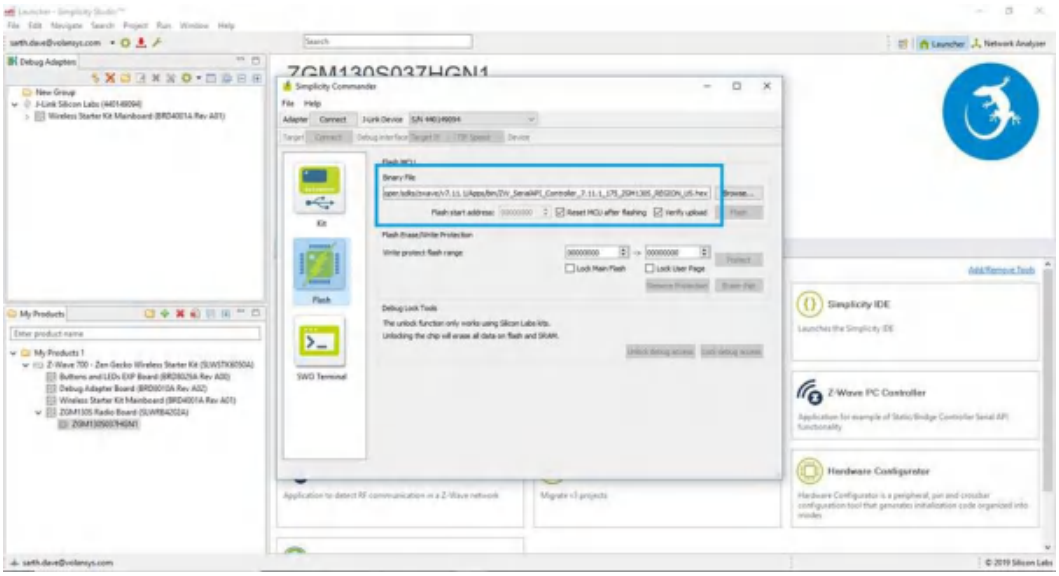

Figure 2-17: Simplicity Studio - Flash Binary Files

10. After the above step, perform Flash operation and the binaries should flash successfully.

Note: The flashing of Z-Wave-700 module can be also performed only by Simplicity commander without installation of Simplicity Studio. To perform flashing using this method, follow the steps 6 - 10.

3 ELECTRICAL CHARACTERISTICS

3.1 Absolute Maximum Ratings

Parameter	Symbol	Test Condition	Min	Typ	Max	Unit
Storage temperature range	S_{tag}		-40	-	85	°C
Voltage on any supply pin	VDD_{max}		-	3.3	3.3	V
Voltage ramp up rate on any supply pin	$VDD_{rampmax}$		-	-	1	V/us
DC voltage on any IO pin	V_{digpin}	5V tolerant IO pins	-	-	5.25	V
		Standard IO pins	-	-	3.6	V
Total current into supply pins	I_{VDDmax}	Source	-	-	200	mA
Total current into VSS ground lines	I_{VSSmax}	Sink	-	-	200	mA
Current per IO pin	I_{IOmax}	Sink	-	-	50	mA
		Source	-	-	50	mA
Current for all IO pins	$I_{IOMaxall}$	Sink	-	-	200	mA
		Source	-	-	200	mA
Junction temperature	T_J		-40	-	105	°C

Table 6: Absolute Maximum Ratings

3.2 Recommended Operating Conditions

Parameter	Symbol	Test Condition	Min	Typ	Max	Unit
Operating ambient temperature range	T_A	-G temperature grade	-40	25	85	°C
AVDD supply voltage	V_{AVDD}		-	3.3	3.8	V
VREGVDD supply voltage	$V_{VREGVDD}$		-	3.3	3.8	V
VREGVDD current	$I_{VREGVDD}$		-	-	200	mA
IOVDD operating voltage	V_{IOVDD}	All IOVDD pins	-	3.3	3.8	V
HFCLK frequency	f_{HFCLK}	VSCALE2	-	-	39	MHz

Table 7: Recommended Operating Conditions

3.3 RF Characteristics

Sub-GHz RF Receiver Characteristics for 915 MHz Band						
Parameter	**Symbol**	**Test Condition**	**Min**	**Typ**	**Max**	**Unit**
RF tuning frequency range	F_{range}		902	-	930	MHz
Max usable input level, 1% FER	SAT100K	Desired is reference 100 kbps GFSK signal	-	10	-	dBm
Sensitivity	SENS	Desired is reference 100 kbps GFSK signal, 1% FER, Frequency = 916 MHz, T<=85 °C	-	-97.5	-	dBm
Level above which RFSENSE will trigger	$RFSENSE_{TRIG}$	CW at 915 MHz	-	-28.1	-	dBm
Level below which RFSENSE will not trigger	$RFSENSE_{THRES}$	CW at 915 MHz	-	-50	-	dBm
Upper limit of input power range over which RSSI	$RSSI_{MAX}$		-	-	5	dBm

resolution is maintained						
Lower limit of input power range over which RSSI resolution is maintained	$RSSI_{MIN}$		-98	-	-	dBm
RSSI resolution	$RSSI_{RES}$	Over $RSSI_{MIN}$ to $RSSI_{MAX}$ range	-	0.25	-	dBm

Table 8: RF Characteristics - Receiver

Sub-GHz RF Transmitter Characteristics for 915 MHz Band						
Parameter	**Symbol**	**Test Condition**	**Min**	**Typ**	**Max**	**Unit**
RF tuning frequency range	F_{range}		902	-	930	MHz
Maximum TX power	$POUT_{max}$	4 dBm output power setting	-	4	-	dBm
Minimum active TX power	$POUT_{min}$		-	-30	-	dBm
Output power step size	$POUT_{step}$	output power > 0 dBm	-	0.5	-	dB
Output power variation vs temperature, peak to peak	$POUT_{var_t}$	-40 to 85 C	-	1.79	-	dB
Output power variation vs RF frequency	$POUT_{var_f}$	T=25 C, over specified RF frequency range	-	1.11	-	dB

Table 9: RF Characteristics - Transmitter

3.4 RF Range

The ZWave 700 module has been tested to and proven to provide 130 meters range in Line of Sight (LOS) measurements. The range measurements of the ZWave 700 module were taken using **W3312B0100** flex patch antenna mounted on a 3 mm thick plate of ABS plastic to simulate the loading effect on the antenna and considers a Packet Error Rate (PER) of <= 10%. The figure below shows the lobe patterns of the used antenna.

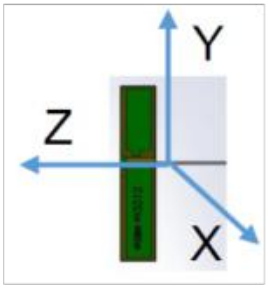

Antenna Axes

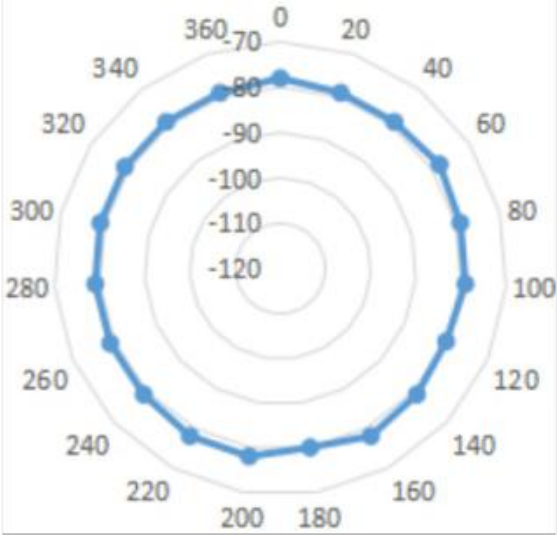

RSSI - XY Plane

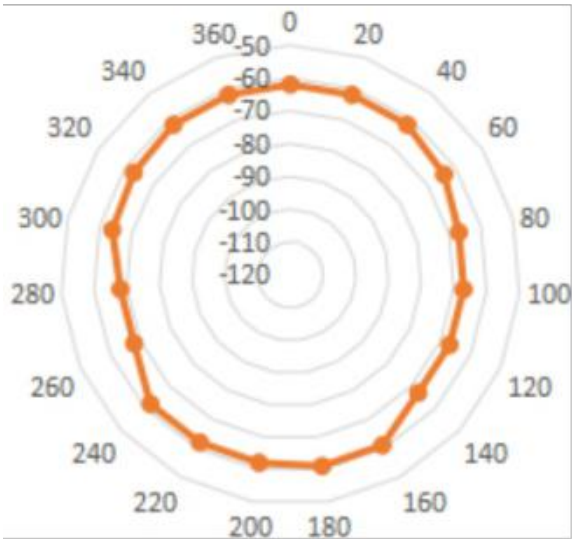

RSSI - YZ Plane

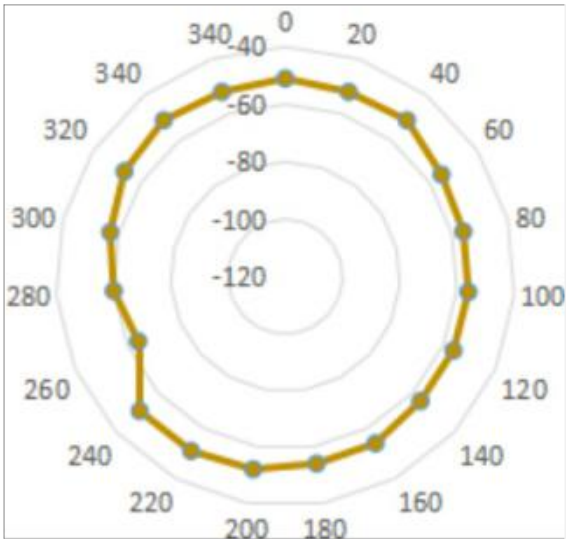

RSSI - XZ Plane

Figure 3-1: RF Range Test Data

3.5 Module Dimensions

The Zwave 700 module comes in two versions.

1. MikroBUS complaint for mounting on female headers. (SKU: MS-ZGM130S-XX-E-02-TH-NS)

2. MikroBUS complaint for assembly with wave soldering. (SKU: MS-ZGM130S-XX-E-02-TH-WS)

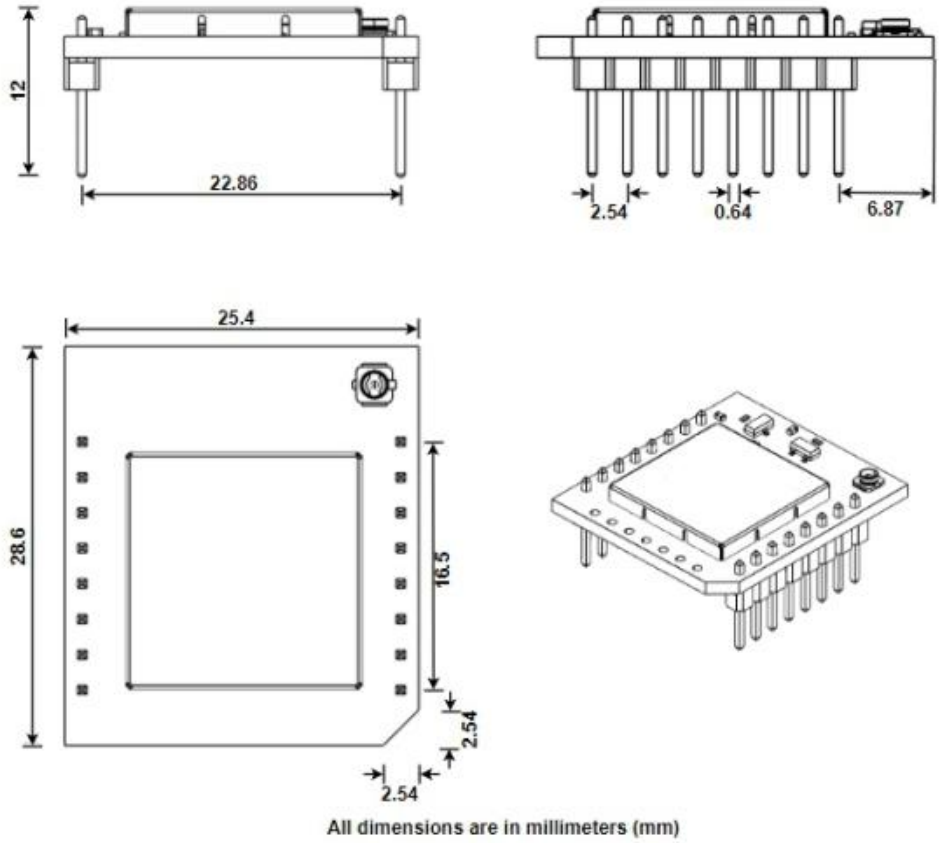

Figure 3-2: ZWave 700 Module - Dimensions (for mounting on female headers)

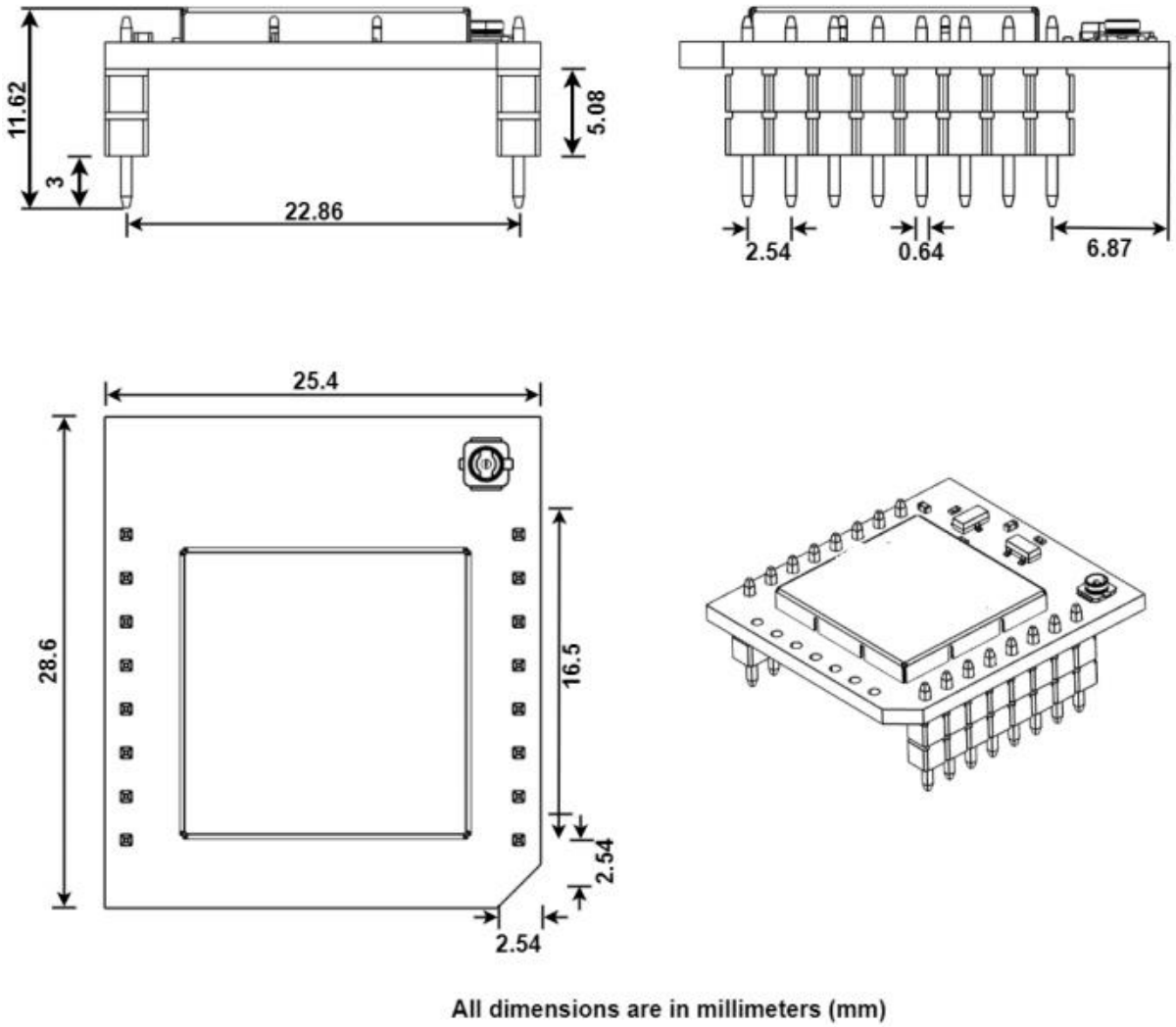

Figure 3-3: ZWave 700 Module - Dimensions (for assembly using wave soldering)

4 CERTIFICATIONS

For ZWave 700 module, pre-compliance has been done as per FCC CFR 47 part 15C. Operation is subject to the following conditions:

- This device may not cause harmful interference, and
- This device must accept any interference received, including interference that may cause undesirable operation.

FCC RF Radiation Exposure Statement

This equipment complies with FCC radiation exposure limits set forth for an uncontrolled environment. End users must follow the specific operating instructions for satisfying RF exposure compliance. This transmitter meets both portable and mobile limits as demonstrated in the RF Exposure Analysis. This transmitter must not be co-located or operating in conjunction with any other antenna or transmitter except in accordance with FCC multi-transmitter product procedures.

5 APPLICATION NOTE

5.1 Safety Precautions

These specifications are intended to preserve the quality assurance of products as individual components. Before use, check and evaluate the module's operation when mounted on your products. Abide by these specifications when using the products. These products may short-circuit. If electrical shocks, smoke, fire, and/or accidents involving human life are anticipated when a short circuit occurs, then provide the following fail safe functions as a minimum:

- Ensure the safety of the whole system by installing a protection circuit and a protection device.
- Ensure the safety of the whole system by installing a redundant circuit or another system to prevent a single fault causing an unsafe status.

5.2 Design Engineering Notes

- Heat is the major cause of shortening the life of the modules. Avoid assembly and use of the target equipment in conditions where the product's temperature may exceed the maximum allowable. Failure to do so may result in degrading of the product's functions and damage to the product.
- If pulses or other transient loads (a large load applied in a short time) are applied to the products, before use, check and evaluate their operation when assembled onto your products.
- These products are not intended for other uses, other than under the special conditions shown below. Before using these products under such special conditions, check their performance and reliability under the said special conditions carefully, to determine whether or not they can be used in such a manner.
- In liquid, such as water, salt water, oil, alkali, or organic solvent, or in places where liquid may splash. In direct sunlight, outdoors, or in a dusty environment. In an environment where condensation occurs. In an environment with a high concentration of harmful gas (ex. salty air, HCl, Cl2, SO2, H2S, NH3, and NOx).
- If an abnormal voltage is applied due to a problem occurring in other components or circuits, replace these products with new products because they may not be able to provide normal performance even if their electronic characteristics and appearances appear satisfactory.
- Mechanical stress during assembly of the board and operation has to be avoided.
- Pressing on parts of the metal cover or fastening objects to the metal cover is not permitted.

5.3 Storage Conditions

The module must not be stressed mechanically during storage. Do not store these products in the following conditions or the performance characteristics of the product, such as RF performance, may well be adversely affected:

- Storage in salty air or in an environment with a high concentration of corrosive gas, such as Cl_2, H_2S, NH_3, SO_2, or NO_X.
- Storage (before assembly of the end product) of the modules for more than one year after the date of delivery at your company even if all the above conditions (1) to (3) have been met, should be avoided.

FCC regulatory conformance：

This device complies with Part 15 of the FCC Rules. Operation is subject to the following two conditions:

(1) This device may not cause harmful interference.

(2) This device must accept any interference received, including interference that may cause undesired operation.

NOTE: This equipment has been tested and found to comply with the limits for a **Class B** digital device, pursuant to part 15 of the FCC Rules. These limits are designed to provide reasonable protection against harmful interference in a residential installation.
This equipment generates uses and can radiate radio frequency energy and, if not installed and used in accordance with the instructions, may cause harmful interference to radio communications. However, there is no guarantee that interference will not occur in a particular installation. If this equipment does cause harmful interference to radio or television reception, which can be determined by turning the equipment off and on, the user is encouraged to try to correct the interference by one or more of the following measures:

- Reorient or relocate the receiving antenna.
- Increase the separation between the equipment and receiver.
- Connect the equipment into an outlet on a circuit different from that to which the receiver is connected.
- Consult the dealer or an experienced radio/TV technician for help

NOTE: The manufacturer is not responsible for any radio or TV interference caused by unauthorized modifications to this equipment. Such modifications could void the user's authority to operate the equipment.

RF Exposure

This equipment complies with FCC radiation exposure limits set forth for an uncontrolled environment. This equipment should be installed and operated with minimum distance of 20 cm between the radiator and your body. This transmitter must not be co-located or operating in conjunction with any other antenna or transmitter.

IC regulatory conformance

This device complies with CAN ICES-003 (B)/NMB-003(B).

This device contains licence-exempt transmitter(s)/receiver(s) that comply with Innovation, Science and Economic Development Canada's licence-exempt RSS(s). Operation is subject to the following two conditions:

(1) This device may not cause interference.

(2) This device must accept any interference, including interference that may cause undesired operation of the device.

Cet appareil est conforme à la norme CAN ICES-003 (B)/NMB-003 (B).

Cet appareil contient des émetteurs / récepteurs exempt (s) de licence qui sont conformes aux RSS exemptes de licence d'Innovation, Sciences et Développement économique Canada. Son fonctionnement est soumis aux deux conditions suivantes:

(1) Cet appareil ne doit pas provoquer d'interférences.

(2) Cet appareil doit accepter toute interférence, y compris les interférences susceptibles de provoquer un fonctionnement indésirable de l'appareil.

RF Exposure

This equipment complies with IC radiation exposure limits set forth for an uncontrolled environment. This equipment should be installed and operated with minimum distance of 20 cm between the radiator and your body. This transmitter must not be co-located or operating in conjunction with any other antenna or transmitter.

Cet équipement est conforme aux limites d’ exposition aux rayonnements de la IC établies pour unenvironnement non contrôé. Cet équipement doit être installé et fonctionner à au moins 20cm de distance d’ un radiateur ou de votre corps.

Unauthorized modifications could void the user's authority to operate the equipment.

This radio transmitter [IC: 22256-CT200LTE50] has been approved by Innovation, Science and Economic Development Canada to operate with the antenna types listed below, with the maximum permissible gain indicated. Antenna types not included in this list that have a gain greater than the maximum gain indicated for any type listed are strictly prohibited for use with this device.

Frequency range	Manufacturer	Peak gain	Impedance	Antenna type
908.4-916MHz	Pulse larsen	1dBi	50Ω	FPC antenna
777-1910MHz	Shengdacom	4dBi	50Ω	External Antenna