Modular IoT Gateway

User Manual

"The cutting Edge Modular Technology"

Copyright Info

The information contained in this document is the proprietary information of Volansys Technologies Pvt., Ltd. The contents are confidential and any disclosure to persons other than the officers, employees, agents or subcontractors of the owner or licensee of this document, without the prior written consent of Volansys, is strictly prohibited.

Further, no portion of this document may be reproduced, stored in a retrieval system, or transmitted in any form or by any means, electronic or mechanical, including photocopying and recording, without the prior written consent of Volansys, the copyright holder.

Volansys publishes this document without making any warranty as to the content contained herein. Further Volansys reserves the right to make modifications, additions and deletions to this document due to typographical errors, inaccurate information, or improvements to reference design platforms or products mentioned in the document at any time and without notice. Such changes will, nevertheless be incorporated into new editions of this document.

Warranty

For details on the Volansys Modular IoT Gateway warranty policy, please visit our website:
www.volansys.com

CONFIDENTIAL

TABLE OF CONTENTS

1 REVISION HISTORY 7

1.1 REVISION HISTORY 7
1.2 REFERENCES 7

2 USING THIS MANUAL 8

2.1 PURPOSE AND AUDIENCE 8
2.2 SUMMARY OF CHAPTERS 8

3 OVERVIEW 9

3.1 KEY FEATURES 10
3.2 USER CASES 11
3.3 PROTOCOL SUPPORT 11
3.4 ADDRESSES AND PORT NUMBERS 12
3.4.1 Hardware Address 12
3.4.2 IP Address 12
3.4.3 Port Numbers 12
3.5 REFERENCE DESIGN PLATFORM INFORMATION LABEL 12

4 REFERENCE DESIGN PLATFORM ARCHITECTURE AND INTERFACES 13

4.1 MEMORY, I/O PORTS AND EXTERNAL PERIPHERAL SUPPORT 14
4.1.1 DDR3 14
4.1.2 NAND Flash 14
4.1.3 Micro SD Card Slot 14
4.2 ETHERNET PORT 14
4.3 USB PORTS 14
4.4 USB DEBUG PORT 15
4.5 WI-FI AND BLUETOOTH 15
4.6 USER INTERFACE SWITCH 15
4.6.1 Commissioning Switch (SW1) 15
4.6.2 Reset Switch 16
4.7 USER LED INDICATIONS 16
4.8 NFC CONTROLLER 16
4.9 MIKROBUS COMPATIBLE HEADERS 17
4.10 JN5179 ZIGBEE MODULE 17
4.11 MKW41Z THREAD+BLE MODULE 18

5 INSTALLATION OF GATEWAY 19

5.1 MODULAR IOT GATEWAY BOX CONTENT 19
5.2 DEVICES INSIDE MODULAR IOT GATEWAY 19
5.3 USER REQUIRED ITEMS 19

6 DEMO SETUP OF MODULAR IOT GATEWAY 20

7 CONTACT US AND SUPPORT 21

8 APPENDIX-A 22

CONFIDENTIAL

8.1 ACRONYMS & GLOSSARY 22

9 APPENDIX-B 23

9.1 COMPLIANCE 23

9.2 ROHS, REACH COMPLIANCE 23

CONFIDENTIAL

List of Figures

Figure 1 – Modular IoT Gateway 9
Figure 2 - Modular IoT Gateway With Inbuilt Peripheral 10
Figure 3 – Modular IoT Gateway With Inbuilt Peripheral 11
Figure 4 – Reference Design platform information Label 12
Figure 5 – Architecture Block Diagram 13
Figure 6 – Inside view of Modular IoT Gateway 13
Figure 7 – Reference design Platform interface details 14
Figure 8 – Modular IoT Gateway Switches 15
Figure 9 - NFC Controller 16
Figure 10 - MikroBUS Header 17
Figure 11 - JN5179 Module 17
Figure 12 - MKW41Z Module 18

CONFIDENTIAL

Copyright © 2016 Volansys

List of Tables

Table 1 - Revision History 7
Table 2 – References 7
Table 3 - References 8
Table 4 - Gateway USB Configuration 14
Table 5 - Terminal Settings 15
Table 6 - User Interface Switch 16
Table 7 - User LED Indications 16
Table 8 – Modular IoT Gateway Reference design platform Content 19
Table 9 - Modular IoT Gateway Unit Contents 19
Table 10 – Other Require Equipment 19
Table 11 - Acronyms & Glossary 22

CONFIDENTIAL

Copyright © 2016 Volansys

1 REVISION HISTORY

1.1 Revision History

Rev.	Date	Description	Prepared By	Reviewed By	Approved By
0.1	21-Nov-16	Initial draft version released	Volansys	Volansys	
0.2	02-March-17	Updated based on review comments	Volansys	Volansys	
0.3	03-March-17	Updated based on review comments	Volansys	Volansys	
0.4	12-July-17	Added MKW41Z details and updated certification label details with new Gateway part#	Volansys	Volansys	

Table 1 - Revision History

1.2 References

Documents	Revision
i.MX6UL Base Board Hardware User Guide	0.4
Datasheet of JN5179 Module	1.1
Datasheet/Product manual of MKW41Z Module	0.4
Quick start Guide of PN7120 NFC Controller Board	1.1

Table 2 – References

CONFIDENTIAL

2 USING THIS MANUAL

2.1 Purpose and Audience

This document provides Introduction, key features, Reference design platform Architecture and interfaces, demo setup and use of Modular IoT Gateway. It is intended for the users who are configuring this Reference design platform. The user need to use this reference design platform in well controlled indoor environment.

2.2 Summary of chapters

Chapter No.	Chapter	Description
3	Overview	Describes Introduction and key features and the protocols it supports. Includes technical specifications.
4	Reference Design Architecture and Interfaces	Describes Hardware interface idea and wireless technology support details.
5	Installation of Gateway	Describe details of List of content in box of Reference design platform and how to install it on field
6	Demo Setup of Modular IoT Gateway	Describes setup and configuration procedure with Wi-Fi and Ethernet using mobile application.
7	Contact us and support	Instructions for contacting Volansys and Technical Support details
8	Appendix A	Acronyms and Glossary – Full forms of used short names
9	Appendix B	Gateway compliance details

Table 3 - References

CONFIDENTIAL

Copyright © 2016 Volansys

3 OVERVIEW

"**Modular IoT Gateway**" is a smart, modular, customizable, multi-service advance Reference Design Platform for Internet of Things. It is targeted for multiple use cases in various segments of IoT such as **Smart Home, Buildings and Industries**. Powered by industrial leading technologies, the Gateway is designed with Core features like Modular Hardware Design and Multi-Radio Connectivity **(i.e. Wi-Fi, BLE, ZigBee**, **Thread and NFC)**.

Figure 1 – Modular IoT Gateway

The Modular IoT Gateway, based on advance processor i.MX6UltraLite introduces users to the assembled version of Gateway carrier and SoM board inside the platform. This gateway will help users to develop and run their IoT based concept using wireless interfaces like **Wi-Fi, BLE, ZigBee**, **Thread and NFC** easily and operate any supported devices wirelessly. It supports Wi-Fi and Ethernet for communication with cloud.

The Modular IoT Gateway supports various versatile wireless hardware module through MikroBUS Header such as **Volansys' RF Modules** and other MikroBUS standard supported modules. It also support new generation features **PN7120 base NFC module, KW41Z based Thread+BLE module and NXP JN5179 ZigBee Module**.

CONFIDENTIAL

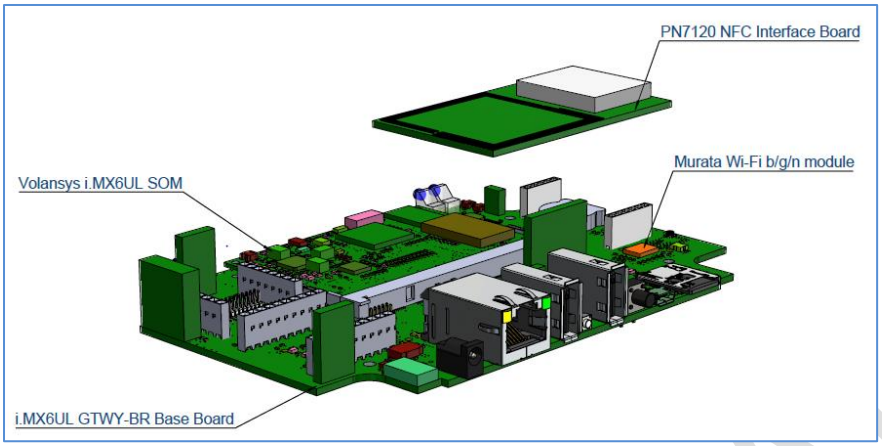

Figure 2 - Modular IoT Gateway With Inbuilt Peripheral

3.1 Key Features

The following specifications are available in the Modular IoT Gateway Reference design platform:

- **Power Supply**
  - DC Jack for Input - 5V/3A from adaptor
- **Processor**
  - i.MX 6UltraLite applications processor with a 528 MHz ARM® Cortex®-A7 core
- **Memory**
  - 256MB DDR3L SDRAM
  - 1GB NAND Flash
  - Micro SD connector
- **Ethernet**
  - 1x 10/100Mbps Ethernet RJ-45 connector
- **USB Port**
  - 1x USB 2.0 Host connector
  - 1x USB 2.0 Host connector (Device mode support)
- **Wireless Technology**
  - Wi-Fi 802.11b/g/n and 802.15.1 BLEv4.0 compatible **Wi-Fi + BT** module from Murata
  - 802.15.4/ZigBee Module JN5179
  - NFC module using PN7120 controller for commissioning
  - Thread+BLE Module MKW41Z
- **Header Support**
  - MikroBUS compatible header to support mikroBUS compatible Volansys' **RF modules** & all other MikroBUS' click modules which is universally accepted with same header compatibility
- **Other I/O**
  - 1x Debug port via USB micro-B connector
  - 1x Power LED, 2x Status LED
  - 1x User Switch (for commissioning), 1x reset Switch
  - JTAG connector

CONFIDENTIAL

- **Dimension**
  - 146.045 mm x 96.656 mm x 27.537 mm
- **Weight**
  - 250 Grams
- **Operating Temperature and Humidity**
  - 0 to 50 °C, 10% to 80% RH (Non-considering)
- **Storage Temperature and Humidity**
  - -10 to 50 °C, 5% to 80% RH (Non-considering)

3.2 User Cases

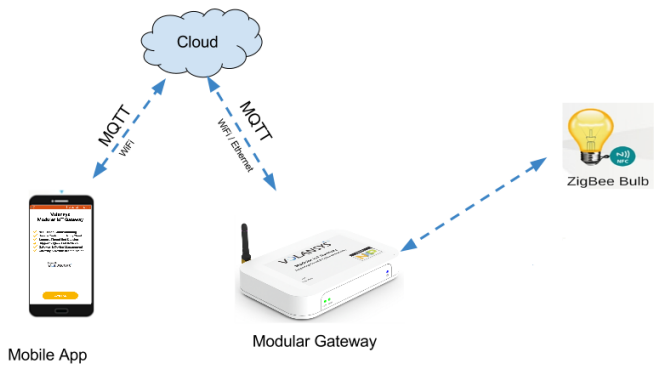

Figure 3 – Modular IoT Gateway With Inbuilt Peripheral

Volansys modular IoT gateway is central device to test gateway out of box. In this demo, user can control and monitor ZigBee/Thread end devices with help of mobile application. In order to use, Modular IoT Gateway, user needs to provide Internet connectivity to gateway board. The Gateway board support Ethernet and Wi-Fi interface for cloud connectivity. Gateway also support NFC commission. Using this NFC commission method user can provide Wi-Fi credential to Gateway and register them. User can seamlessly add ZigBee device in Gateway network by NFC commission method. Once End devices are added to Gateway's network then user can control them remotely. Here note that the user need to use this reference design platform in well controlled indoor environment.

3.3 Protocol Support

The Modular IoT Gateway contains a full-featured IP networking and wireless software stack:

- DHCP Client, DHCP Server, DHCPv6 Client
- uPnP (Discovery), LCAP (77FE), SSH, SSLv3/TLSv1, HTTP(S)
- IPv4/IPv6, TCP, UDP, ICMP, ARP, Auto-IP, DNS
- WPA/WPA2 Personal

3.4 Addresses and Port Numbers

3.4.1 Hardware Address

The hardware address is also referred to as the Ethernet address, physical address, or MAC address. The first **three bytes of the** Ethernet address are fixed and identify the unit as a volansys reference design platform. The fourth, fifth, and sixth bytes are unique numbers assigned to each unit. Sample ways hardware address may be represented:

- 00-80-A3-14-1B-18
- 00:80:A3:14:1B:18

3.4.2 IP Address

Every device connected to an IP network must have a unique IPv4 address. This address references the specific unit.

3.4.3 Port Numbers

Every TCP connection is defined by a destination and source IP Address, and a destination and source port number. For example, a Telnet server commonly uses TCP port number 23.

The following is a list of the default server port numbers running on the Modular IoT Gateway:

- **TCP Port 22**: SSH Server (Command Mode configuration)
- **TCP Port 80**: HTTP (Web Manager Configuration)

3.5 Reference design platform information Label

The Reference design platform information label on the device contains the following information about the specific unit:

- Company Logo
- Model Name
- Platform Part Number
- Serial Number and Barcode
- MAC Address and Barcode
- Power Rating
- FCC and CE certificate details

e.g.:

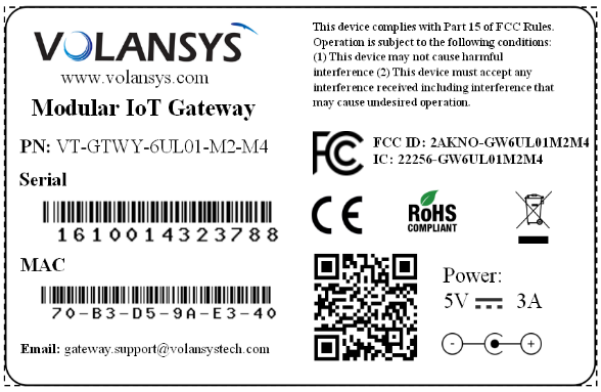

Figure 4 – Reference Design platform information Label

CONFIDENTIAL

4 Reference Design Platform Architecture and Interfaces

Modular IoT Gateway implements a variety of peripheral interfaces to connect with i.MX6UL based SoM Module. This section provides detailed information about different peripherals of Modular IoT Gateway. The architecture block diagram of Modular IoT Gateway board is shown as below:

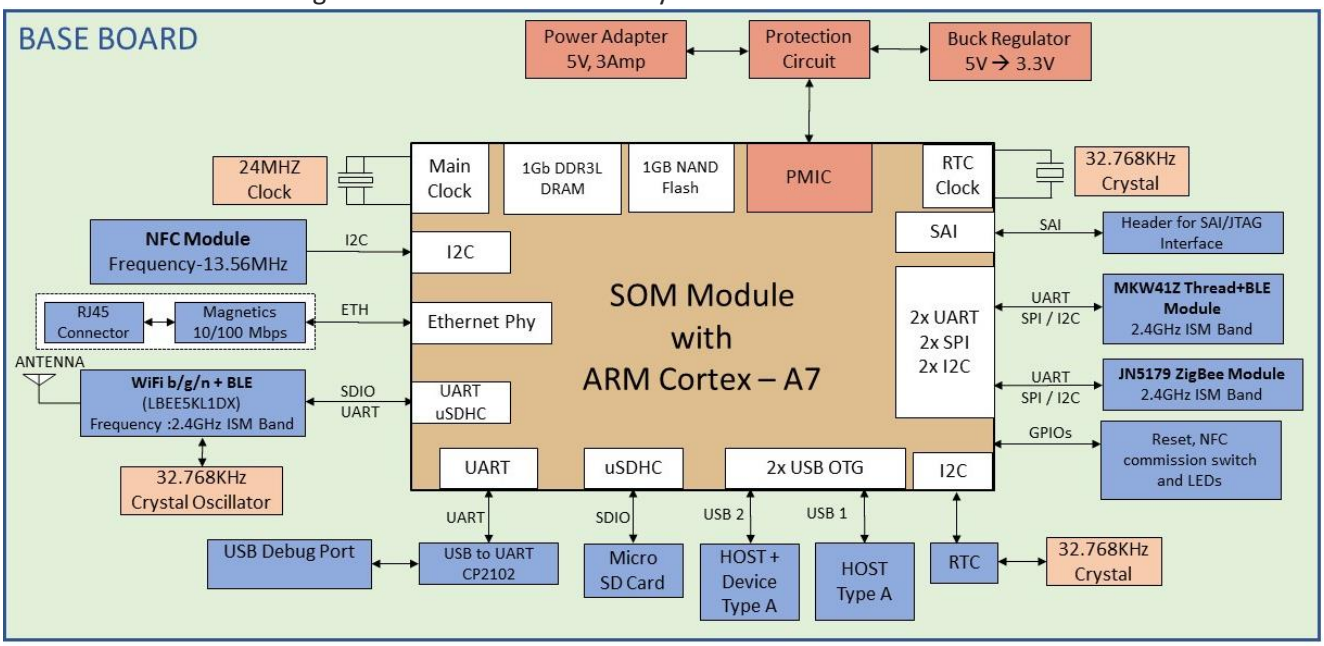

- Support Frequency Range for
  - **BLE, Thread, Wi-Fi and ZigBee:-2400-2483.5 MHz**
  - **NFC:- 13.56MHz**

Figure 5 – Architecture Block Diagram

The inside view of Modular IoT Gateway is shown in following figures,

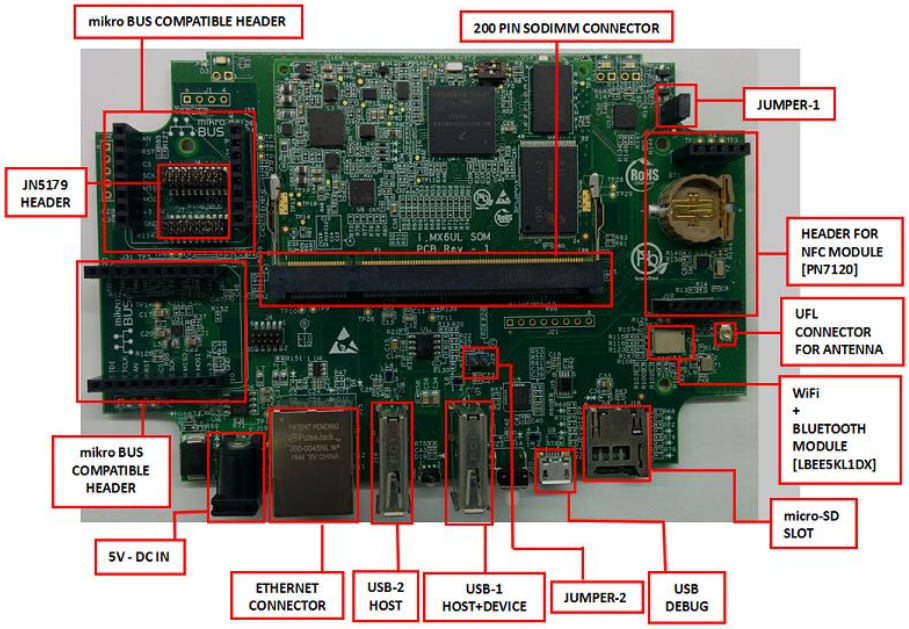

Figure 6 – Inside view of Modular IoT Gateway

Copyright © 2016 Volansys

4.1 Memory, I/O Ports and external peripheral support

4.1.1 DDR3

- Modular IoT Gateway is equipped with 256 MB DDR3L Memory which is upgradable up to 1 GB.

4.1.2 NAND Flash

- Gateway is available with on-board NAND (1GB) flash.

4.1.3 Micro SD Card Slot

- Micro SD slot (J18) is provided on Modular IoT Gateway.
- It is connected to USDHC1 interface of i.MX 6UltraLite on SoM Module.

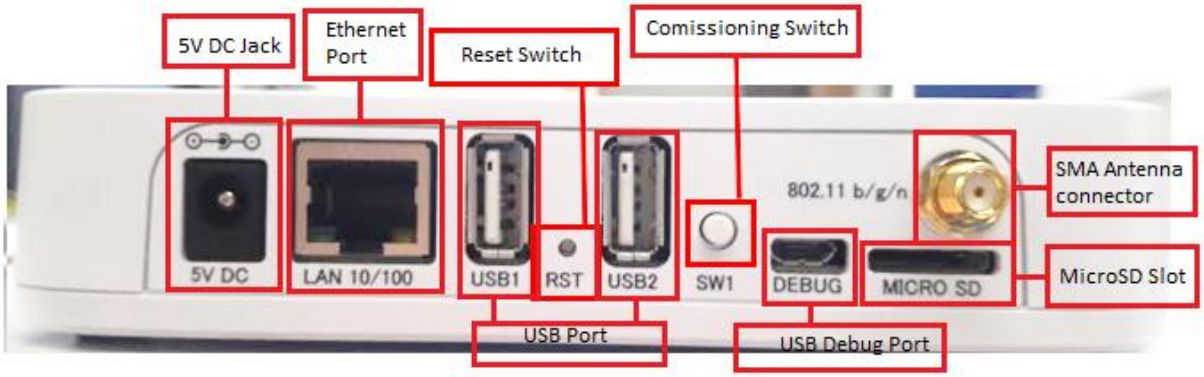

Figure 7 – Reference design Platform interface details

4.2 Ethernet Port

Modular IoT Gateway incorporates a single full-featured 10/100 Ethernet interface, implemented with the i.MX6UL MAC-NET core in conjunction with a 10/100-Mbit/s MAC coupled with an on-board 10/100 PHY.

The modular IoT Gateway comes with following features:

- Integrated PHY on SoM for 10/100 Mbps
- Auto-negotiation support
- Programmable MAC address

4.3 USB Ports

The USB interface block provides two High speed USB port, which supports USB ver. 2.0. Initially both the connectors will act as host. User can configure USB-2(J17) port as device also by modifying jumpers setting. USB-1 (J16) will work as host only.

Jumper setting for USB-2 port host and device mode are shown in below table:

	USB-2 HOST	USB-2 DEVICE
JUMPER 1 (J30)	CLOSE	OPEN
JUMPER 2 (J29)	OPEN	CLOSE

Table 4 - Gateway USB Configuration

Copyright © 2016 Volansys

When using serial download option for Boot, USB-2(J17) will be used in Device mode. It is required to change Jumper setting to enable device mode.

4.4 USB Debug Port

The Modular IoT Gateway comes with one microUSB debug port support to simplify debugging mechanism. A CP2102, USB to serial UART IC is used to convert the UART signals to USB. A micro-B to standard A USB cable can be used. UART1 port is used as the debug port.
The required terminal settings are shown in the following table:

Baud Rate	115200
Data Bits	8
Parity	None
Stop Bits	1
Flow Control	None

Table 5 - Terminal Settings

4.5 Wi-Fi and Bluetooth

Modular IoT Gateway provides support of Single Band (2.4GHz) Wi-Fi and Bluetooth using Murata's LBEE5KLDX RF module on Gateway.

The Modular IoT Gateway supports following features:

- Support of single band IEEE 802.11b/g/n Wi-Fi
- Bluetooth ver. 4.1 BLE
- Provides SDIO interface for Wi-Fi and UART interface for Bluetooth operation
- External u.fl connectors is connected with antenna line of module to provide external Whip antenna support

4.6 User Interface Switch

4.6.1 Commissioning Switch (SW1)

SW1 is used to start/stop NFC commissioning mode. It is also used to power off the gateway board by long pressing it for more than 15 sec.

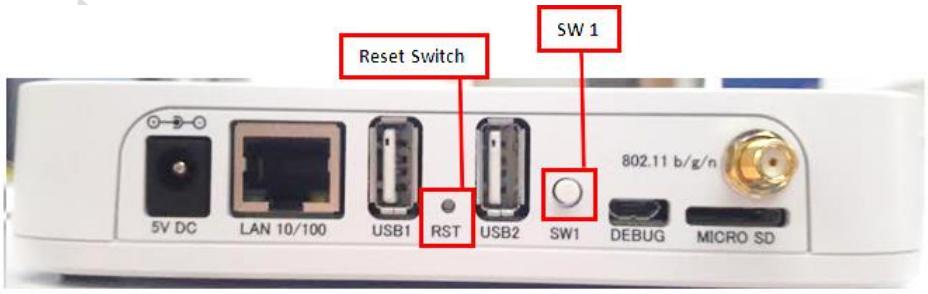

Figure 8 – Modular IoT Gateway Switches

CONFIDENTIAL

Different control mechanism for switch is provided as below:

Switch	Control	Last State	Next State
SW1	Short Press (>5sec & < 15sec)	NFC Commission Window Off	Start NFC commission window
		NFC Commission Window ON	Stop NFC commission window
	Long press (> 15sec)	Any	Power off gateway board

Table 6 - User Interface Switch

4.6.2 Reset Switch

One reset switch is provided for user, to reboot the system without removing power supply. Pressing the switch will drive logic zero on RESETn signal, which will affects every modules on gateway.

4.7 User LED Indications

Two dual color LEDs are used to provide indication about different Gateway functionalities. Below table indicates color mark to represent specific events.

LED	Behavior	Represents
LED1	Green	Connected to cloud
	Red	Not Connected to cloud
	Orange	Connecting to cloud
LED2	Green	Commission window is On
	Orange	Commission window is Off
	Blink fast for 10 times	ED Commission successful
	Blink slow for 5 times	ED Commission failed

Table 7 - User LED Indications

Note: User can change LEDs behavior based on their use case scenario.

4.8 NFC Controller

Modular IoT gateway have NFC Module Header for NFC Connectivity. It's have PN7120 NFC Controller from NXP Semiconductor.

Figure 9 - NFC Controller

CONFIDENTIAL

4.9 MikroBus Compatible Headers

Modular IoT Gateway contains two standard MikroBUS header which provides SPI, I2C & UART interface and other MikroBUS standard support signals. MikroBUS standard click board can be used with Modular IoT Gateway board. Below figure displays Standard MikroBUS socket position on Modular IoT Gateway board:

Figure 10 - MikroBUS Header

4.10 JN5179 ZigBee Module

NXP's ZigBee module have JN5179 wireless controller which was low power supporting for ZigBee interface.

JN5179 module supports following features:

- 2.4GHz IEEE802.15.4 compliant
- 512KB Flash
- 32KB RAM
- On board PCB Antenna
- Compact size: 14.5mm x 20.5mm
- TX power 8.5 dBm/10 dBm
- Receiver sensitivity –96 dBm
- TX current 24 mA at 10 dBm
- TX current 21.2 mA at 8.5 dBm
- RX current 14.3 mA at maximum input level –2 dBm
- 2.0 V/3.6 V operation
-

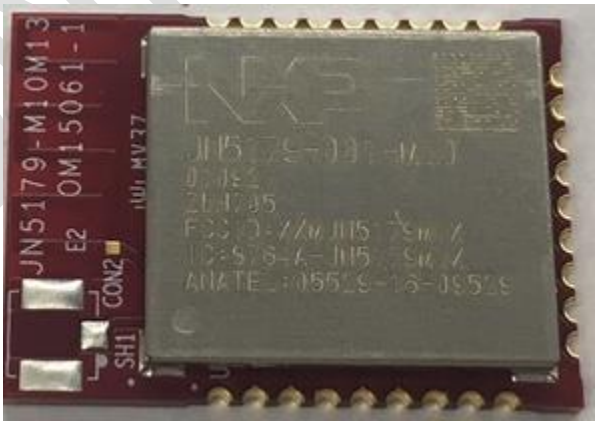

Figure 11 - JN5179 Module

CONFIDENTIAL

4.11 MKW41Z Thread+BLE Module

The MKW41Z module is ultra-compact, low power high sensitivity module. It is based on NXP's MKW41Z512VHT4 SoC combined with Bluetooth Low energy and IEEE 802.15.4 network stacks like Thread, ZigBee pro etc.

MKW41Z module supports following features:

- 32bit 48MHz ARM® Cortex-M0+ MCU
- 64KB SRAM
- 512KB Flash
- Integrated chip antenna
- Compact size: 19mm x 11.51mm x 3mm (L x W x H)
- Max Tx power: +3.5 dbm
- Typical Receiver Sensitivity (BLE) = -96 dBm
- Typical Receiver Sensitivity (802.15.4) = -100 dBm
- Integrated DC-DC Buck/boost converter, 0.9 V to 4.2 V operation
- Low Power Mode (VLLS0) Current: ≈180 nA
- On module 32MHz and 32KHz crystal

Figure 12 - MKW41Z Module

CONFIDENTIAL

5 INSTALLATION OF GATEWAY

The Modular IoT Gateway comes with its required contents and it is mentioned in below section.

5.1 Modular IoT Gateway Box Content

Modular IoT Gateway comes with following listed items:

Item	Description
Modular IoT Gateway Unit	Comes with External Antenna attached
Power Adapter	DC 5V, 3A – plug in with Gateway to power up Gateway
Documentation	Quick Start Guide

Table 8 – Modular IoT Gateway Reference design platform Content

5.2 Devices inside Modular IoT Gateway

Modular IoT Gateway has different peripherals support. It contains following peripherals to support different functionality and all must be installed inside Gateway:

Item	Description
SoM	Based on i.MX6UL processor, 200-pin SO-DIMM standard supported module
Base Board	Multiple RF interface support with Volansys' SoM
NFC Module	For commissioning of different modules
JN5179 module	Provides ZigBee interface support
MKW41Z module	Provides Thread+BLE interface support

Table 9 - Modular IoT Gateway Unit Contents

5.3 User required Items

To complete your demo installation you need following items and it is not standard parts of Modular IoT Gateway. User needs to manage it.

Item	Description
USB Cable	USB Cable (micro B to standard A)
Ethernet Cable	To connect with network using Ethernet
Micro SD Card	Bootable Linux image
NFC Tags	To register/commission on network through Gateway
Internet connectivity	To connect Gateway via Ethernet or Wi-Fi
Mobile Application	To operate Gateway
Windows PC	To update firmware and get EUI-64 of FRDM-KW24D512

Table 10 – Other Require Equipment

Note: Recommended Ethernet cable length is 3mm or less.

CONFIDENTIAL

6 DEMO SETUP OF MODULAR IOT GATEWAY

Kindly refer Modular IoT Gateway OOB Demo Setup Guide-v1.1 for Demo setup and configuration.

CONFIDENTIAL

Copyright © 2016 Volansys

7 Contact Us and Support

INDIA Office:
Block A - 7th Floor,
Safal Profitaire,
Corporate Road,
Prahaladnagar,
Ahmedabad, Gujarat 380015
Phone: + 91-79-40041994.

USA Office:
3080 Olcott St. Suite D235
Santa Clara CA – 95054.
Phone: +1 510 358 4310

E-mail: sales@volansys.com

Volansys offers many resources to support our customers and reference design platforms at
Website: www.volansys.com

For instance, you can ask a question and other technical details related to reference design platforms at our website. At this site you can also find FAQs, bulletins, warranty information, extended support services and Reference design platform documentation.

To contact technical support or sales, look up your local office at: http://volansys.com/contact/

When you report a problem, please provide the Following information:

- Your name, company name, address, and phone number
- Description of the problem
- Status of the unit when the problem occurred.

CONFIDENTIAL

Copyright © 2016 Volansys

8 APPENDIX-A

8.1 Acronyms & Glossary

The following terms are used in this document

Sr No#	Terms	Definition
1.	BLE/BT	Bluetooth Low Energy/Bluetooth
2.	eMMC	Embedded Multimedia Card
3.	GPIO	General Purpose Input and Output
4.	GPS	Global Positioning System
5.	GSM	Global System for Mobile Communication
6.	I2C	Inter Integrated Circuit
7.	IoT	Internet Of Things
8.	JTAG	Joint Test Action Group
9.	LDO	Low Dropout
10.	LED	Light Emitting Diode
11.	MCU	Microcontroller Unit
12.	NFC	Near Field Communication
13.	PMIC	Power Management Integrated Circuits
14.	SDRAM	Synchronous Dynamic Random Access Memory
15.	SMA	Subminiature version A
16.	SoC	System on Chip
17.	SoM	Systems On Module
18.	SPI	Serial Peripheral Interface
19.	TBD	To Be Define
20.	U.FL	Ultra-Miniature RF Connector
21.	UART	Universal Asynchronous receiver and Transmitter
22.	USB	Universal Serial Bus

Table 11 - Acronyms & Glossary

CONFIDENTIAL

Copyright © 2016 Volansys

9 APPENDIX-B

9.1 Compliance

(According to ISO/IEC Guide and EN 45014)

Reference Design Platform Name Model:
Modular IoT Gateway
Conforms to the following standards or other normative documents:

Safety

- EN 60950-1:2006 + A11:2009 + A1:2010 + A12:2011 + A2:2013

Emissions

- CFR Title 47 FCC Part 15, Subpart B, Class A Emissions
- EN55022: 2010, Class A Emissions
- CISPR 22: 2009, Class A Emissions

Immunity

- EN55024: 2010
- EN610000-4-2: 2009
- EN61000-4-3: 2006 + A1: 2008 + A2: 2010
- EN61000-4-4: 2004
- EN61000-4-5: 2005
- EN61000-4-6: 2009
- EN61000-4-8: 2010
- EN61000-4-11: 2004
- CISPR 16-1-4: 2008
- ICES-0003 Issue 6

9.2 RoHS, REACH Compliance

CONFIDENTIAL

FCC Regulations:

This device complies with part 15 of the FCC Rules. Operation is subject to the following two conditions: (1) This device may not cause harmful interference, and (2) This device must accept any interference received, including interference that may cause undesired operation.

This device has been tested and found to comply with the limits for a Class B digital device, pursuant to Part 15 of the FCC Rules. These limits are designed to provide reasonable protection against harmful interference in a residential installation. This equipment generates, uses and can radiated radio frequency energy and, if not installed and used in accordance with the instructions, may cause harmful interference to radio communications. However, there is no guarantee that interference will not occur in a particular installation If this equipment does cause harmful interference to radio or television reception, which can be determined by turning the equipment off and on, the user is encouraged to try to correct the interference by one or more of the following measures:

-Reorient or relocate the receiving antenna.
-Increase the separation between the equipment and receiver.
-Connect the equipment into an outlet on a circuit different from that to which the receiver is connected.
-Consult the dealer or an experienced radio/TV technician for help.

Caution: Changes or modifications not expressly approved by the party responsible for compliance could void the user‘s authority to operate the equipment.

RF Exposure Information

This device complies with FCC radiation exposure limits set forth for an uncontrolled environment. In order to avoid the possibility of exceeding the FCC radio frequency exposure limits, human proximity to the antenna shall not be less than 20cm (8 inches) during normal operation.

ISED Notice

This device complies with Innovation, Science and Economic Development Canada license-exempt RSS standard(s). Operation is subject to the following two conditions:
(1) this device may not cause interference, and
(2) this device must accept any interference, including interference that may cause undesired operation of the device.

Le présent appareil est conforme aux CNR Innovation, Sciences et Développement économique Canada applicables aux appareils radio exempts de licence. L'exploitation est autorisée aux deux conditions suivantes:
(1) l'appareil ne doit pas produire de brouillage, et
(2) l'utilisateur de l'appareil doit accepter tout brouillage radioélectrique subi, même si le brouillage est susceptible d'en

This Class B digital apparatus complies with Canadian ICES-003.
Cet appareil numérique de la classe B est conforme à la norme NMB-003 du Canada.

IC: 22256-GW6UL01M2M4

CONFIDENTIAL

ISED RF Exposure Statement

This device complies with ISED RSS-102 RF exposure limits set forth for an uncontrolled environment. In order to avoid the possibility of exceeding the IC RSS-102 RF exposure limits, human proximity to the antenna shall not be less than 20cm (8 inches) during normal operation.

Cet appareil est conforme aux limites d'exposition aux rayonnements de la CNR-102 définies pour un environnement non contrôlé. Afin d'éviter la possibilité de dépasser les limites d'exposition aux fréquences radio de la CNR-102, la proximité humaine à l'antenne ne doit pas être inférieure à 20 cm (8 pouces) pendant le fonctionnement normal.

CONFIDENTIAL