Datasheet

JN5179 MikroBUS Module

Revision: 1.0

Date: 26-Feb-2020

Volansys Technologies Private Limited
Block A 7th Floor, Safal Profitaire, Corporate Road,
Prahladnagar, Ahmedabad 380015, India
www.volansys.com
Phone: 91-79-4004-1994
Email: info@volansys.com

Confidentiality Notice

Copyright © 2019Volansys – All rights reserved.

This document is authored by Volansys and is Volansys' intellectual property, including the copyrights in all countries in the world. This document is provided under a license to use only with all other rights, including ownership rights, being retained by Volansys. This file may not be distributed, copied, or reproduced in any manner, electronic or otherwise, without the express written consent of Volansys.

TABLE OF CONTENTS

1 INTRODUCTION....6

1.1 PURPOSE....6
1.2 SCOPE....6
1.3 ACRONYMS AND ABBREVIATIONS....6
1.4 REFERENCES....6
1.5 DOCUMENT CONVENTIONS....6
1.6 COPYRIGHT INFORMATION....7
1.7 WARRANTY....7

2 PRODUCT OVERVIEW....8

2.1 MODULE FEATURES....9
2.2 SUGGESTED APPLICATIONS....9
2.3 MODULE PIN DETAILS....10
2.4 MODULE PIN TO HEADER CONNECTIONS....11
2.5 IO - ALTERNATE FUNCTIONS....13
2.6 ANTENNA....16
2.6.1 JN5179-001-M10....16
2.6.2 JN5179-001-M13....17
2.6.3 JN5179-001-M16....18
2.7 RESET....18
2.8 PROGRAMMING THE JN5179 MIKROBUS MODULE....19
2.8.1 Pre-requisites....19
2.8.2 Installing LPCXpresso IDE....19
2.8.3 Flashing the JN5179 MikroBUS Module....22

3 ELECTRICAL CHARACTERISTICS....24

3.1 ABSOLUTE MAXIMUM RATINGS....24
3.2 RECOMMENDED OPERATING CONDITIONS....24
3.3 DC CURRENT....25
3.3.1 Active Processing....25
3.3.2 Sleep Mode....26
3.3.3 Deep Sleep Mode....26
3.4 RF CHARACTERISTICS....27
3.4.1 RF Port Characteristics....27
3.4.2 Radio Transceiver Characteristics....27

4 MODULE DIMENSIONS....29

5 CERTIFICATIONS....30

6 APPLICATION NOTE....31

6.1 SAFETY PRECAUTIONS....31
6.2 DESIGN ENGINEERING NOTES....31
6.3 STORAGE CONDITIONS....32

LIST OF FIGURES

FIGURE 2-1 : JN5179 MIKROBUS MODULE BLOCK DIAGRAM..... 8
FIGURE 2-2 :JN5179 MIKROBUS MODULE PINS.....10
FIGURE 2-3 : JN5179-001-M1X SMT MODULE..... 12
FIGURE 2-4 :JN5179-001-M10 MODULE..... 17
FIGURE 2-5 :JN5179-001-M13 MODULE..... 17
FIGURE 2-6 :JN5179-001-M16 MODULE..... 18
FIGURE 2-7 : RESET PIN.....18
FIGURE 2-8 : INSTALL NEW SOFTWARE..... 19
FIGURE 2-9 : ADD REPOSITORY.....20
FIGURE 2-10 : ADD SDK FILES..... 20
FIGURE 2-11 : SDK ELEMENTS..... 21
FIGURE 2-12 : IDE ADDTIONS 21
FIGURE 2-13 : JN5179 MIKROBUS MODULE ON MENP..... 22
FIGURE 2-14 : PROGRAMMING DIALOG BOX.....22
FIGURE 2-15 : ELEMENTS OF PROGRAMMING WINDOW..... 23

LIST OF TABLES

TABLE 1-1 : ACRONYMS & ABBREVIATIONS....6
TABLE 1-2 : REFERENCES....6
TABLE 2-1 : MODULE OPTIONS....8
TABLE 2-2 :PIN MAPPING OF JN5179 MIKROBUS MODULE....10
TABLE 2-3 :MODULE PIN TO HEADER CONNECTIONS....11
TABLE 2-4 : IO- ALTERNATE FUNCTIONS....16
TABLE 3-1 : ABSOLUTE MAXIMUM RATINGS....24
TABLE 3-2 : RECOMMENDED OPERATING CONDITIONS....24
TABLE 3-3 : DC CURRENT - ACTIVE PROCESSING....25
TABLE 3-4 : DC CURRENT - SLEEP MODE....26
TABLE 3-5 : DC CURRENT - DEEP SLEEP MODE....26
TABLE 3-6 : RF PORT CHARACTERISTICS....27
TABLE 3-7 : RADIO TRANSCEIVER CHARACTERISTICS....28
TABLE 4-1 : JN5179 MIKROBUS MODULE DIMENSIONS....29

Revision History

Revision	Date	Details of change	Author	Reviewer	Approver
1.0	26-02-2020	Initial Draft	SD	KB	KB

1 INTRODUCTION

1.1 Purpose

The purpose of this document is to provide introduction to key features, architecture and other relevant electrical and mechanical characteristics of JN5179 MikroBUS module.

1.2 Scope

The scope of this document is to explain in detail the design of the JN5179 MikroBUS module. This document is henceforth, to be used as a direct reference by end customers intending to use this product as per their use case.

1.3 Acronyms and abbreviations

Terms	Definition
NC	Not Connected
NP	Not Present
PCB	Printed Circuit Board
PER	Packet Error Rate
IO	Input Output
TBD	To Be Defined
RF	Radio Frequency

Table 1-1: Acronyms & Abbreviations

1.4 References

Reference Document Title	Provided By	Remarks
Schematics Design	Volansys	Primary reference
Layout Design	Volansys	N/A
JN5179 Module Datasheet	NXP	N/A

Table 1-2: References

1.5 Document Conventions

A requirement may include an explanation of the requirement or the interaction between requirements, or other information useful in determining the intent of the requirement. The note, however, is not part of the requirement. Notes are indicated by the prefix “Note”, by verbs other than “shall,” or by enclosure in parentheses.

1.6 Copyright Information

The information contained in this document is the proprietary information of Volansys Technology. The contents are confidential and any disclosure to persons other than the officers, employees, agents or subcontractors of the owner or licensee of this document, without the prior written consent of Volansys, is strictly prohibited.

Further, no portion of this document may be reproduced, stored in a retrieval system, or transmitted in any form or by any means, electronic or mechanical, including photocopying and recording, without the prior written consent of Volansys, the copyright holder.

Volansys publishes this document without making any warranty as to the content contained herein. Further Volansys reserves the right to make modifications, additions and deletions to this document due to typographical errors, inaccurate information, or improvements to reference design platforms or products mentioned in the document at any time and without notice. Such changes will, nevertheless be incorporated into new editions of this document.

1.7 Warranty

For details on the Volansys JN51719 MikroBUS module warranty policy, please Email us on :- Business@volansystech.com

2 Product Overview

Volansys' JN5179 MikroBUS module is based on NXP's JN5179-001-M1x family of modules which is a range of ultra-low power, high performance modules targeted at IEEE 802.15.4. ZigBee home automation networking applications. These modules are MikroBUS compliant, enabling users to realize products with minimum time to market. These modules use NXP's JN5179 wireless micro controller to provide a comprehensive solution with high CPU and radio performance and all RF components included.

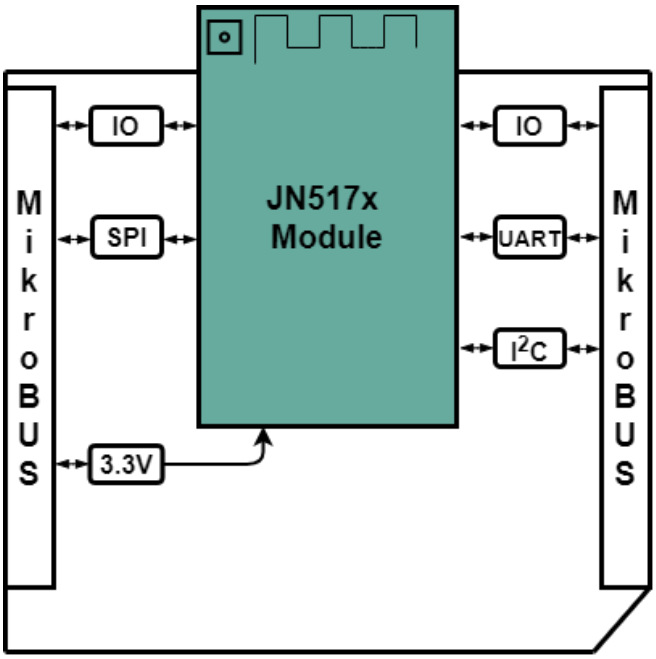

Figure 2-1: JN5179 MikroBUS Module Block Diagram

Item	Volansys SKU	Module Type	Description
JN5179 MikroBUS Module	MS-JN5179M10-T-01-TH	JN5179-001-M10	Standard power, integrated printed antenna.
	MS-JN5179M13-E-01-TH	JN5179-001-M13	Standard power, u.FL antenna connector.
	MS-JN5179M16-E-01-TH	JN5179-001-M16	High power, antenna diversity (integrated printed antenna and u.Fl antenna connector.

Table 2-1: Module Options

2.1 Module Features

- 2.4 GHz IEEE 802.15.4, ZigBee Smart Energy and Home Automation compatible.
- JN5179-001-M10
  - Integrated printed antenna
  - TX power 8.5 dBm/10 dBm
  - Receiver sensitivity -96 dBm
  - TX current 24 mA @ 10 dBm
  - TX current 21.2 mA @ 8.5 dBm
  - RX current 14.3 mA @ maximum input level -2 dBm
- JN5179-001-M13
  - U.Fl connector for external antenna
  - TX power 8.5 dBm/10 dBm
  - Receiver sensitivity -96 dBm
  - TX current 24 mA @ 10 dBm
  - TX current 21.2 mA @ 8.5 dBm
  - RX current 14.3 mA @ maximum input level -2 dBm
- JN5179-001-M16
  - Integrated printed antenna & u.FL connector
  - TX power 21 dBm
  - Receiver sensitivity -100 dBm
  - TX current 114 mA @ 21 dBm
  - RX current 19 mA @ maximum input level -11 dBm

2.2 Suggested Applications

- Robust and secure low-power wireless applications.
- ZigBee Home Automation networks.
- Zigbee 3.0 based applications.
- Toys and gaming peripherals.
- Energy harvesting - for example, self-powered light switch.

2.3 Module Pin Details

The pin detail for the JN5179 MikroBUS module is as described below:

Module Pin Name	Pin	mikroBUS				Pin	Module Pin Name
J1.1	TDI	-	NP	NP	-	TDO	J2.1
J1.2	TCK	-	NP	NP	-	TMS	J2.2
J1.3	AN	1	AN	PWM	16	PWM	J2.3
J1.4	RST	2	RST	INT	15	INT	J2.4
J1.5	CS	3	CS	RX	14	TX	J2.5
J1.6	SCK	4	SCK	TX	13	RX	J2.6
J1.7	SDO	5	MISO	SCL	12	SCL	J2.7
J1.8	SDI	6	MOSI	SDA	11	SDA	J2.8
J1.9	3V3	7	3.3V	5V	10	NC	J2.9
J1.10	GND	8	GND	GND	9	GND	J2.10

Table 2-2:Pin Mapping of JN5179 MikroBUS Module

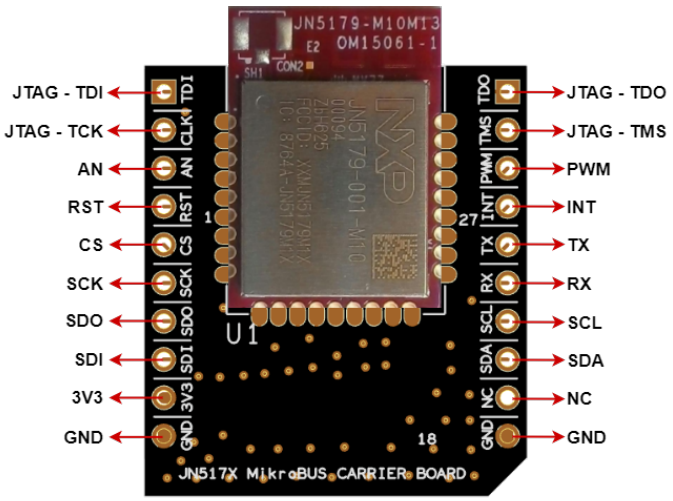

Figure 2-2:JN5179 MikroBUS module Pins

2.4 Module Pin to Header Connections

The table below shows which pins of the JN5179-001-M1x module are connected to the MikroBUS compatible headers.

Sr. No.	MikroBUS Header Pin	JN5179-001-M1x Module Pin
1	J1.1	DIO7
2	J1.2	DIO17
3	J1.3	ADC0
4	J1.4	RESET_N
5	J1.5	DIO6
6	J1.6	DO0
7	J1.7	DO1
8	J1.8	DIO7
9	J1.9	VCC
10	J1.10	GND
11	J2.1	DIO15
12	J2.2	DIO11
13	J2.3	DIO13
14	J2.4	DIO14
15	J2.5	DIO9
16	J2.6	DIO10
17	J2.7	DIO3
18	J2.8	DIO2
19	J2.9	NC
20	J2.10	GND

Table 2-3:Module Pin to Header Connections

The figure below shows pin description of a JN5179-001-N1X SMT module from NXP. This image, along with the information from table 1-3 can be used to plan the muxing of IOs if required by the end user.

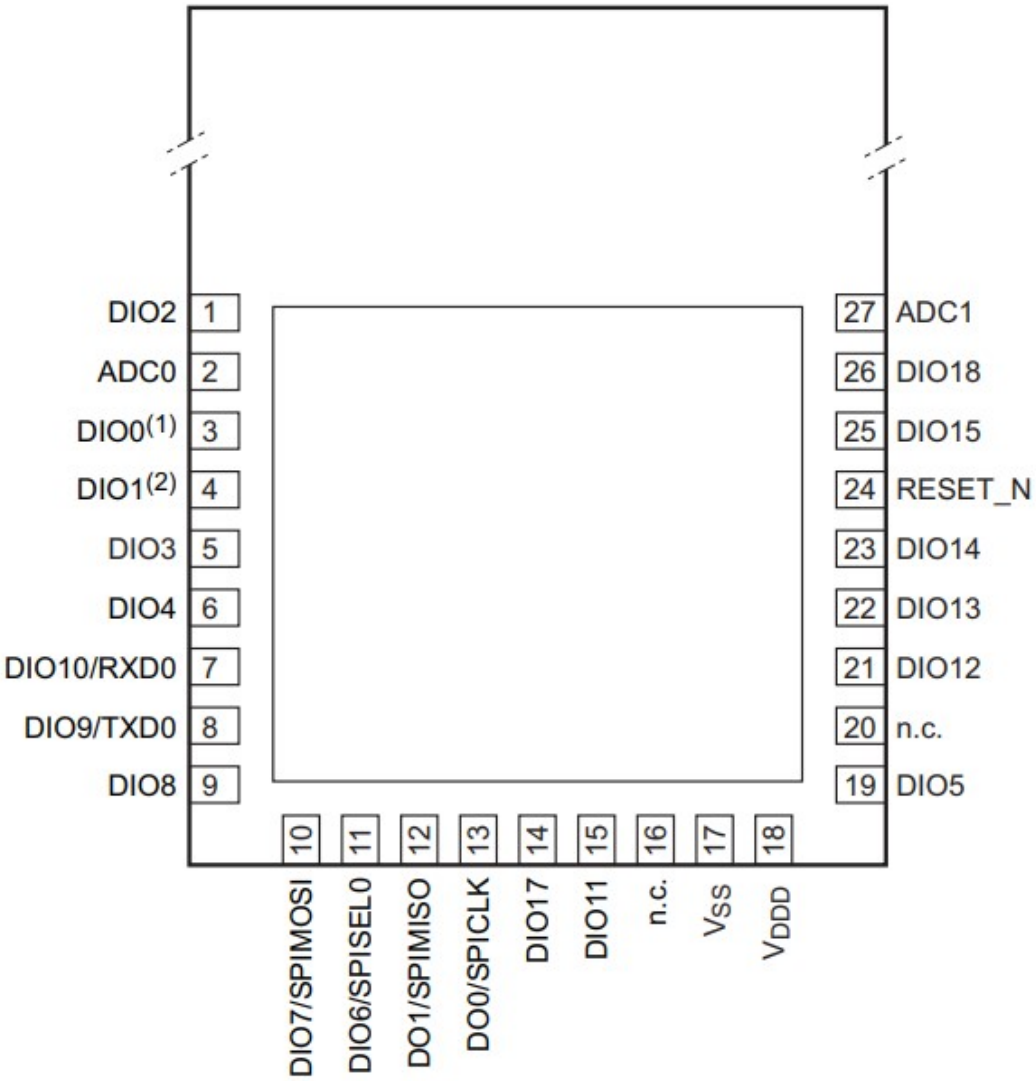

Figure 2-3: JN5179-001-M1X SMT Module

2.5 IO - Alternate Functions

The table below describes alternate functionalities of the JN5179-001-M1x module IOs spread out on the MikroBUS headers.

Pin	Pin Type	Description
DO0	Output	**DO0** - Digital output 0
		SPICLK - SPI BUS master clock output
		ADE - Antenna diversity even output
DO1	Output	**DO1** - Digital output 1
		SPIMISO - SPI-bus master data input
		SPISMISO - SPI-bus slave data output
		ADO - antenna diversity odd output
DIO2	Input/Output	**DIO2** - digital input/output 2
		ADC5 - ADC input 5 SDA - I 2C-bus master/sl
		SDA - I 2C-bus master/slave SDA input/output (push-pull output)
		RXD1 - UART 1 receive data input
		TIM0CAP - Timer0 capture input
		RFRX - radios receiver control output
DIO3	Input/Output	**DIO3** - digital input/output 3
		ADC2 - ADC input 2
		PWM4 - PWM4 output
		SCL - I 2C-bus master/slave SCL input/output (push-pull output)
		TXD1 - UART 1 transmit data output
		TIM0OUT - Timer0 output
		RFTX - radio transmit control input
		FLICK_CTRL - flicker control output

Pin	Pin Type	Description
DIO6	Input/Output	**DIO6** - digital input/output 6
		SPISEL0 - SPI-bus master select output 0
		CTS0 - UART 0 clear to send input
		RXD1 - UART 1 receive data input
		JTAG_TCK - JTAG TCK input
		SWCK - Serial Wire Debugger Clock input
		SPISCLK - SPI-bus slave clock input
		TIM1CAP - Timer1 capture input
DIO7	Input/Output	**DIO7** - digital input/output 7
		SPIMOSI - SPI-bus master data output
		JTAG_TDI - JTAG TDI data input
		SPISEL2 - SPI-bus master select output 2
		SPISSEL - SPI-bus slave select input
		CMP_OUT - comparator output
		32KIN - 32 kHz External clock input
		32KXTALOUT - 32 kHz clock output
DIO9	Input/Output	**DIO9** - digital input/output 9
		JTAG_TDO - JTAG TDO data output
		TXD0 - UART 0 transmit data output
		TRACESWV - ARM trace serial wire viewer output
DIO10	Input/Output	**DIO10** - digital input/output 10
		JTAG_TDI - JTAG TDI data input
		RXD0 - UART 0 receive data input

Pin	Pin Type	Description
DIO11	Input/Output	**DIO11** - digital input/output 11
		JTAG_TMS - JTAG TMS input SWD — serial wire debugger input
		RTS0 - UART 0 request to send output
		TXD1 - UART 1 transmit data output
		SPICLK - SPI-bus master clock output
		SPISMOSI - SPI-bus slave data input
		TIM1OUT - Timer1 output
		TRACED0 - ARM trace data0 output
		SWD - serial wire debugger input
DIO13	Input/Output	**DIO13** - digital input/output 13
		PWM2 - PWM2 output
		RXD0 - UART 0 receive data input
		PC0 - pulse counter 0 input
		TRACED2 - ARM trace data2 output
DIO14	Input/Output	**DIO14** - digital input/output 14
		PWM3 - PWM3 output
		PC1 - pulse counter 1 input
		CMP_OUT - comparator output
		TRACED1 - ARM trace data1 output
		SPISMOSI - SPI-bus slave data input
DIO15	Input/Output	**DIO15** - digital input/output 15
		PWM6 - PWM6 output
		JTAG_TDO - JTAG TDO data output
		SPIMOSI - SPI-bus master data output

Pin	Pin Type	Description
DIO15	Input/Output	**SPISEL1** - SPI-bus master select output 1
		TIM0CK_GT - Timer0 - clock gate input
		TRACESWV - ARM trace Serial Wire Viewer output
		SPISSEL - SPI-bus slave select input
DIO17	Input/Output	**DIO17** - digital input/output 17
		JTAG_TCK - JTAG TCK input
		SWCK - Serial Wire Debugger Clock input
		SPISEL0 - SPI-bus master select output 0
		TIM1CAP - Timer1 capture input
		COMP1P - comparator plus input
		SPISMISO - SPI-bus slave data output
ADC0	Input	**ADC0** - ADC input 0

Table 2-4: IO- Alternate Functions

2.6 Antenna

As per the description in Table 2-1, the JN5179 MikroBUS module has three types of antenna configurations. These are described as below.

2.6.1 JN5179-001-M10

JN5179 MikroBUS module that comes with JN5179-001-M10 module is a standard power module with printed antenna.

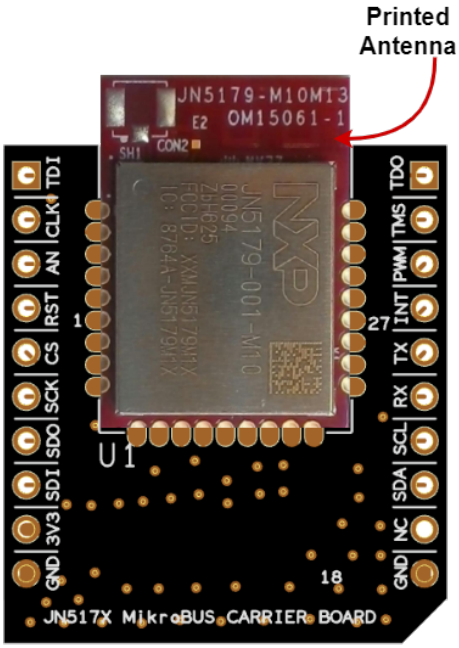

Figure 2-4:JN5179-001-M10 Module

2.6.2 JN5179-001-M13

JN5179 MikroBUS module that comes with JN5179-001-M13 module is a standard power module with u.FL connector to connect external antennas.

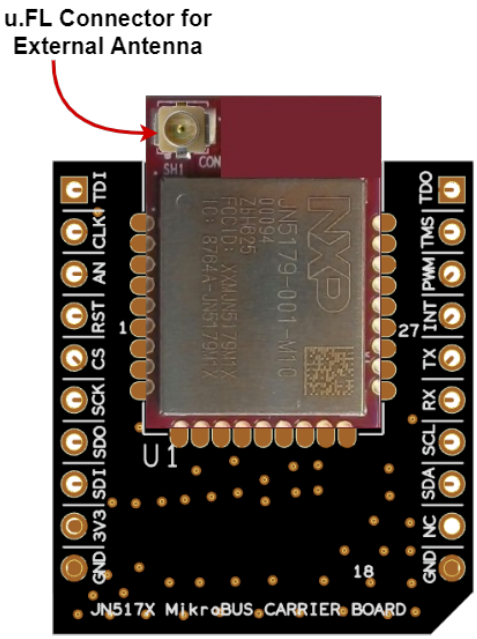

Figure 2-5:JN5179-001-M13 Module

2.6.3 JN5179-001-M16

JN5179 MikroBUS module that comes with JN5179-001-M13 module is a high-power module with printed antenna and u.FL connector for external antennas.

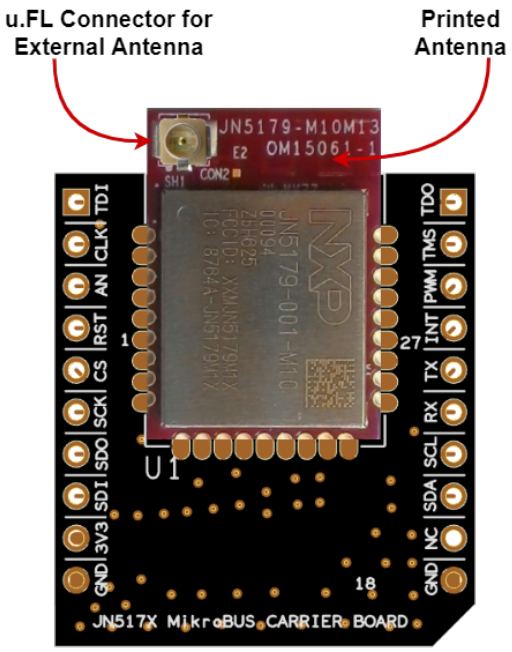

Figure 2-6:JN5179-001-M16 Module

2.7 Reset

Pin 2 of the header "J1" (Pin 2 or RST in MikroBUS) is to be used for resetting the module externally. The reset input pin is active low. This pin is already pulled up internally and so would not require any external pull-up resistors on the host boards. To apply an external reset to this pin, only drive this pin low during reset and let the internal pull-up ensure that the reset is released.

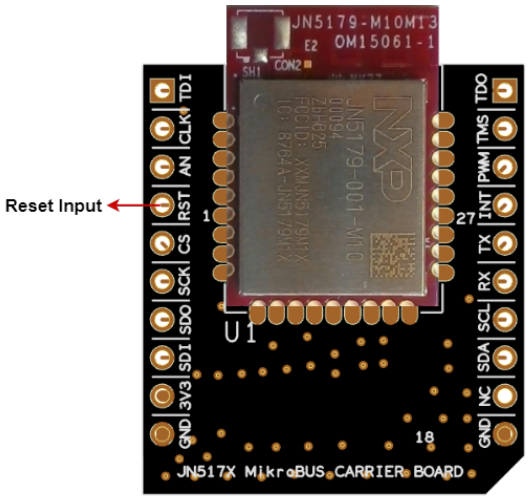

Figure 2-7: Reset Pin

2.8 Programming the JN5179 MikroBUS Module

2.8.1 Pre-requisites

- "LPCXpresso" . (Can be downloaded from here: https://nxp.com/lpcxpresso)
- Volansys MENP board.
- Micro USB to USB type A cable.

2.8.2 Installing LPCXpresso IDE

1. After the "LPCXpresso" has been installed, JN5179 SDK needs to be installed on the PC in order to program the JN5179 modules.

2. Download the JN5179 ZigBee 3.0 SDK from NXP's website. Extract the contents of the .zip file in a folder. Download the file JN-SW-4270-ZigBee 3.0-vxxxx. The SDK can be download here: https://nxp.flexnetoperations.com/control/frse/download?agree=Accept&element=10413847

3. Open the LPCXpresso IDE and head towards the help menu and select "Install New Software". This is shown in figure 2-8.

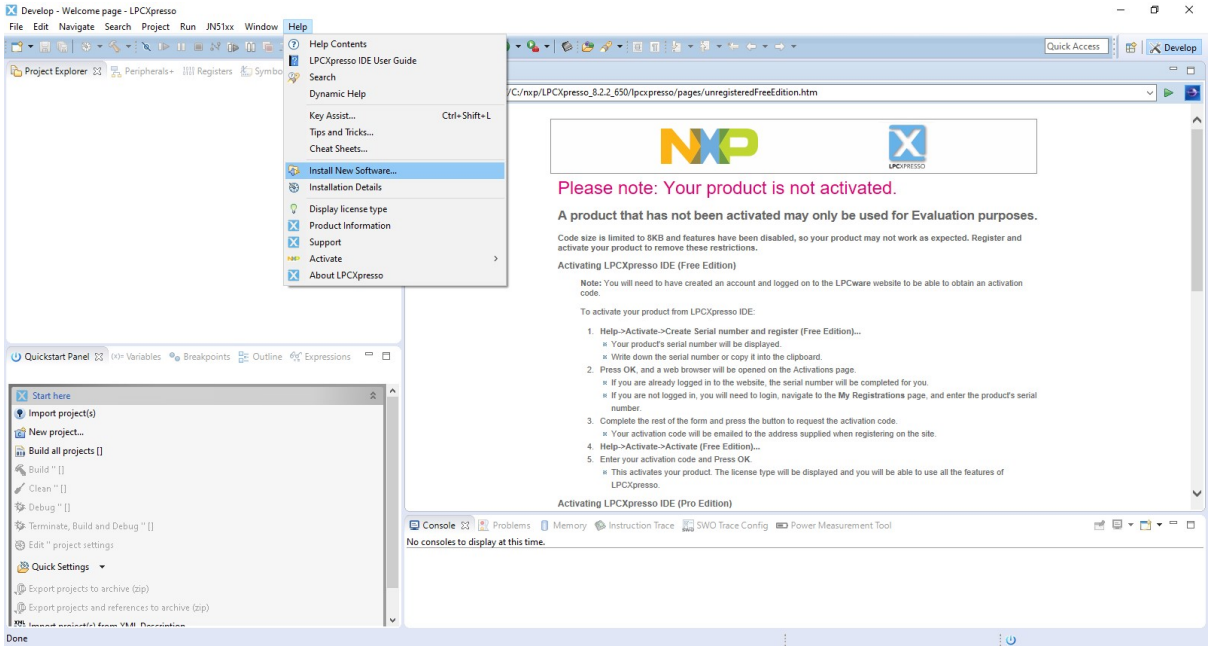

Figure 2-8: Install New Software

4. When the Install new software window opens, click on "Add" and a new dialog box should open up for adding repository.

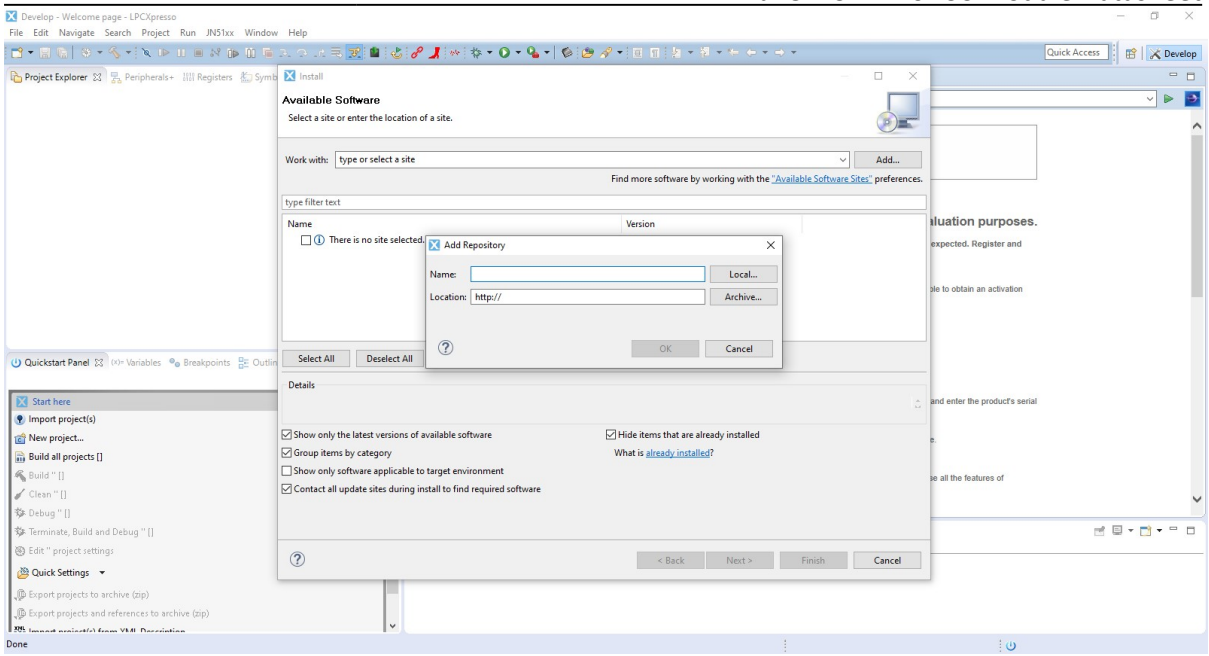

Figure 2-9: Add Repository

5. After the contents of the downloaded .zip file are extracted, there will still be .zip file within which contains all the required .jar files. On the "Add Repository" dialog, click "Archive" and point to the .zip file within the extracted folder.

6. Next copy the SDK part number to "Name", add ".zip" to it and terminate it with an "!" mark. For e.g., if the SDK part number is JN-SW-4270-ZigBee 3.0-v1841, then the following should be written in the name field: "JN-SW-4270-ZigBee 3.0-v1841.zip!".

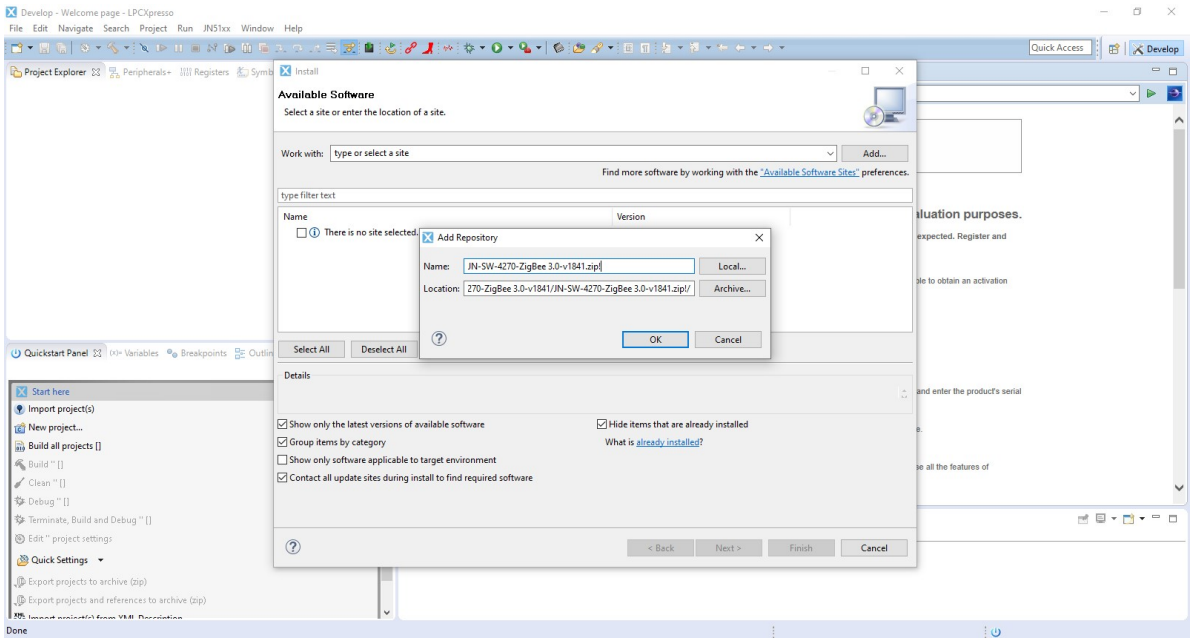

Figure 2-10: Add SDK Files

7. Select all the checkboxes at the next prompt and press “Next” to install all the necessary modules of the SDK.

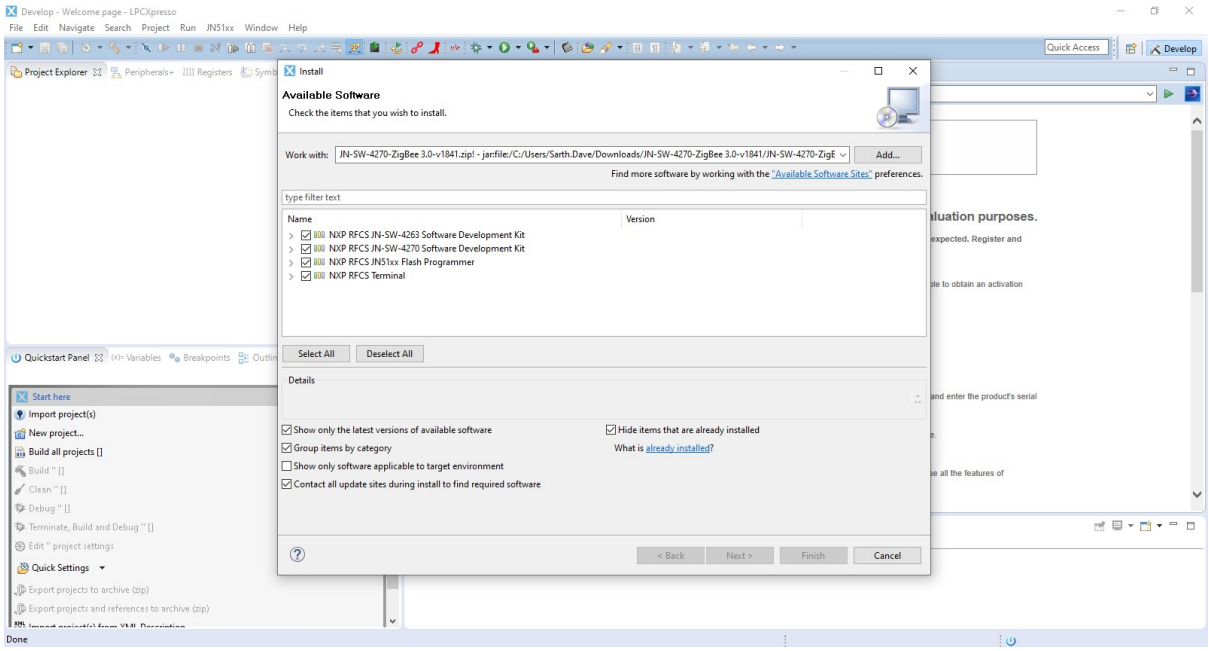

Figure 2-11: SDK Elements

8. After successful installation of all the SDK components, re-run the LPCXpresso IDE. There should be JN51xx entry in the menu bar and a programming button should be added to the environment. This is shown in the figure 2-12.

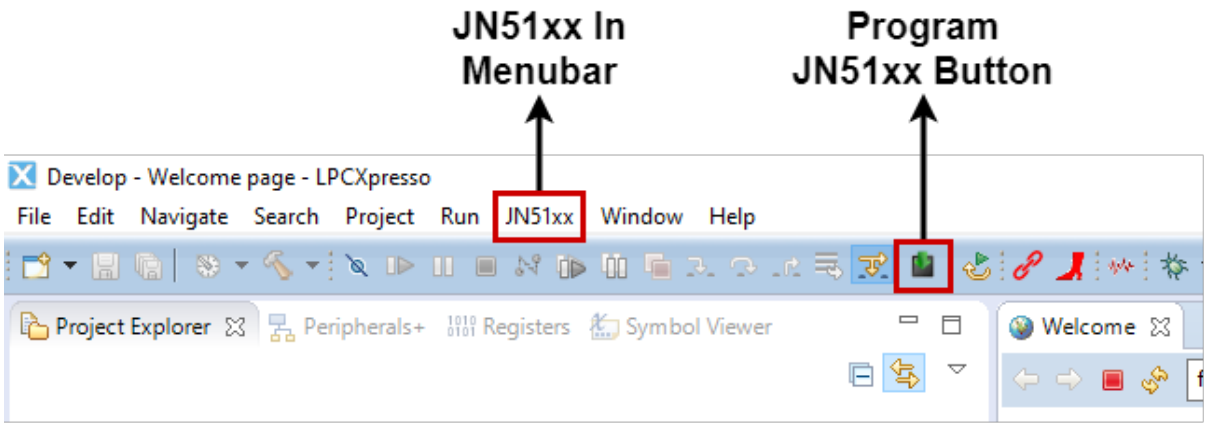

Figure 2-12: IDE Addtions

2.8.3 Flashing the JN5179 MikroBUS Module

1. Prepare the MENP board by closing all the necessary jumpers and install the JN5179 MikroBUS module to be programmed shown in figure 2-13.

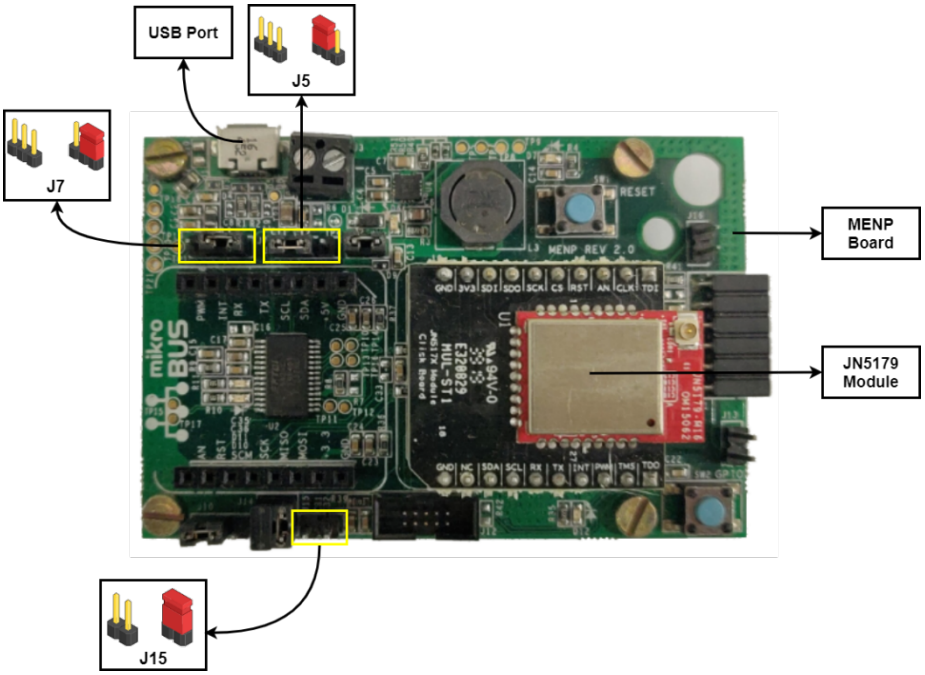

Figure 2-13: JN5179 MikroBUS Module on MENP

2. Connect the MENP board along with the JN5179 MikroBUS module to the PC using a micro USB cable and open the LPCXpresso IDE.

3. Click on JN51xx in menu bar and click “program device”. A program window will open. This is shown in figure 2-14

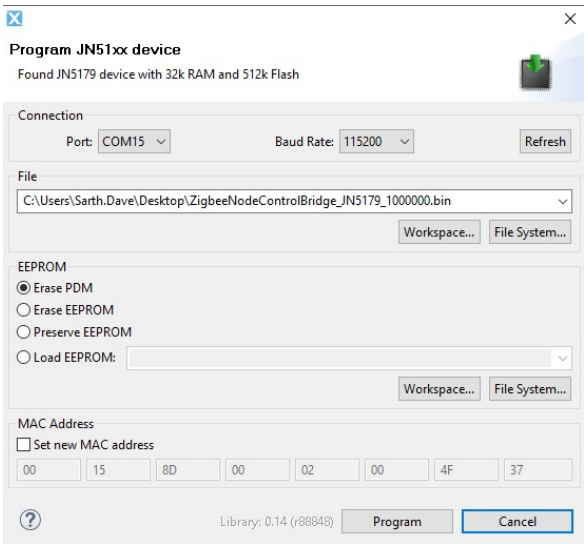

Figure 2-14: Programming Dialog Box

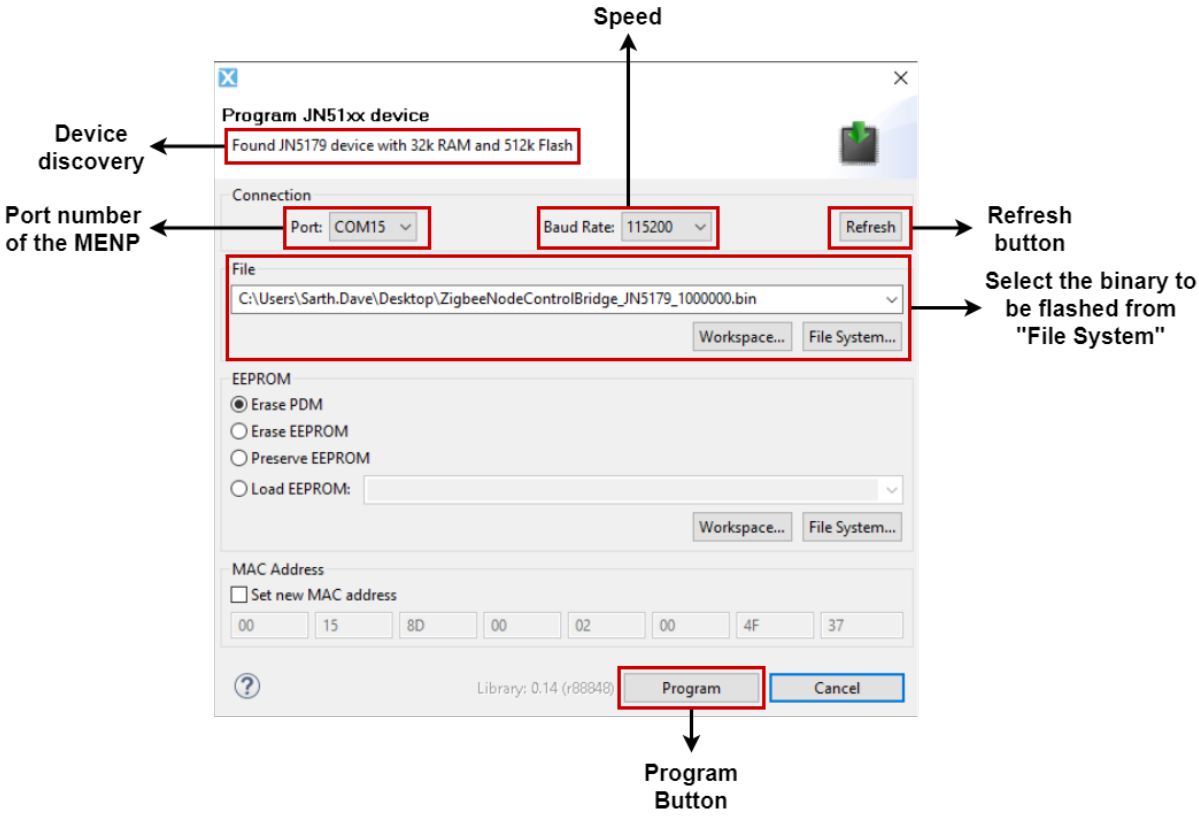

Figure 2-15: Elements of Programming Window

4. Click on "Refresh". Then select on the appropriate COM port of the MENP and the device discovery area should list the module it discovered. Refer to figure 2-15 for further details.

5. Select appropriate binary file to be flashed into the module using the "File System" button and point towards the file where it is present in the PC's file system.

6. Press "Program" button and wait for the action to complete. Once complete, the JN5179 MikroBUS module should be flashed with the selected binary file.

3 ELECTRICAL CHARACTERISTICS

3.1 Absolute Maximum Ratings

Symbol	Parameter	Minimum	Maximum	Unit
V_{DD}	Supply voltage	-0.3	+3.6	V
V_{ADC}	Voltage on analog input	-0.3	V_{DD} + 0.3	V
V_{IO}	Voltage on digital IO	-0.3	V_{DD} + 0.3	V

Table 3-1: Absolute Maximum Ratings

3.2 Recommended Operating Conditions

Symbol	Parameter	Conditions	Minimum	Maximum	Unit
V_{DD}	Supply voltage	To reach maximum TX power, 2.8V is minimum	2	3.6	V
T_{amb}	Ambient temperature	Standard range	-40	85	°C

Table 3-2: Recommended Operating Conditions

3.3 DC Current

3.3.1 Active Processing

V_{DD} = 2V to 3.6V, T_{amb} = -40 °C to +85 °C, CPU running at 16 MHz; unless otherwise specified.

Symbol	Parameter	Conditions	Min	Typ	Max	Unit
I_{DD}	Supply Current	**M10**				
		Radio in receive mode; maximum input level at 10 dBm	-	16.4	-	mA
		Radio in receive mode; maximum input level at –2 dBm	-	14.3	-	mA
		Radio in transmit mode 10 dBm	-	24	-	mA
		Radio in transmit mode 8.5 dBm	-	21.2	-	mA
		M13				
		Radio in receive mode; maximum input level at 10 dBm	-	16.4	-	mA
		Radio in receive mode; maximum input level at –2 dBm	-	14.3	-	mA
		Radio in transmit mode 10 dBm	-	24	-	mA
		Radio in transmit mode 8.5 dBm	-	21.2	-	mA
		M16				
		Radio in receive mode for u.Fl and PCB antenna	-	19	-	mA
		Radio in transmit mode for u.Fl	-	114	-	mA
		Radio in transmit mode for PCB antenna	-	78	-	mA

Table 3-3: DC Current - Active Processing

3.3.2 Sleep Mode

V_{DD} = 2V to 3.6V, T_{amb} = -40 °C to +85 °C; unless otherwise specified.

Symbol	Parameter	Conditions	Min	Typ	Max	Unit
$I_{DD(IO)}$	Supply current	**M10 and M13**				
		With I/O and RC oscillator timer wake-up; typical values measured at Tamb = 25 °C	-	0.61	-	µA
		M16				
		With I/O and RC oscillator timer wake-up; typical values measured at Tamb = 25 °C	-	0.64	-	µA

Table 3-4: DC Current - Sleep Mode

3.3.3 Deep Sleep Mode

V_{DD} = 2V to 3.6V, T_{amb} = -40 °C to +85 °C; unless otherwise specified.

Symbol	Parameter	Conditions	Min	Typ	Max	Unit
$I_{DD(IO)}$	Supply current	Typical values measured at Tamb = 25 °C and VDD = 3.3 V	-	100	-	nA

Table 3-5: DC Current - Deep Sleep Mode

3.4 RF Characteristics

3.4.1 RF Port Characteristics

V_{DD} = 2V to 3.6V, T_{amb} = -40 °C to +85 °C; unless otherwise specified.

Symbol	Parameter	Minimum	Typical	Maximum	Unit
f_{range}	Frequency range	2.4	-	2.485	GHz

Table 3-6: RF Port Characteristics

3.4.2 Radio Transceiver Characteristics

V_{DD} = 2V to 3.6V, T_{amb} = 25 °C; unless otherwise specified.

Symbol	Parameter	Conditions	Min	Typ	Max	Unit
Receiver						
M10						
S_{RX}	Receiver sensitivity	nominal for 1 % PER, as per 802.15.4	-	-96	-93.5	dBm
$P_{i(RX)(max)}$	Maximum receiver input power	1 % PER, measured as sensitivity; supply current at 14.3 mA	-	-2	-	dBm
$\Delta\alpha_{RSSI}$	RSSI variation	95 dBm to 10 dBm; available through JN5179-001-M1x Integrated Peripherals API	-4	-	+4	dB
M13						
S_{RX}	Receiver sensitivity	nominal for 1 % PER, as per 802.15.4	-	-96	-93.5	dBm
$P_{i(RX)(max)}$	Maximum receiver input power	1 % PER, measured as sensitivity; supply current at 14.3 mA	-	-2	-	dBm
$\Delta\alpha_{RSSI}$	RSSI variation	95 dBm to 10 dBm; available through JN5179-001-M1x Integrated Peripherals API	-4	-	+4	dB

Symbol	Parameter	Conditions	Min	Typ	Max	Unit
M16						
S_{RX}	Receiver sensitivity	nominal for 1 % PER, as per 802.15.4	-	-100	-98.5	dBm
$P_{i(RX)(max)}$	Maximum receiver input power	1 % PER, measured as sensitivity; supply current at 14.3 mA	-	-11	-	dBm
$\Delta\alpha_{RSSI}$	RSSI variation	95 dBm to 10 dBm; available through JN5179-001-M1x Integrated Peripherals API	-4	-	+4	dB
Transmitter						
M10						
P_o	Output power	I_{DD} = 24 mA	-	10	-	dBm
		I_{DD} = 21.2 mA	-	8.5	-	dBm
$P_{o(cr)}$	Control range output power	In 6 major steps and then 4 fine steps	-	-42	-	dB
M13						
P_o	Output power	I_{DD} = 24 mA	-	10	-	dBm
		I_{DD} = 21.2 mA	-	8.5	-	dBm
$P_{o(cr)}$	Control range output power	In 6 major steps and then 4 fine steps	-	-42	-	dB
M16						
P_o	Output power	I_{DD} = 114 mA	-	21	-	dBm

Table 3-7: Radio Transceiver Characteristics

4 Module Dimensions

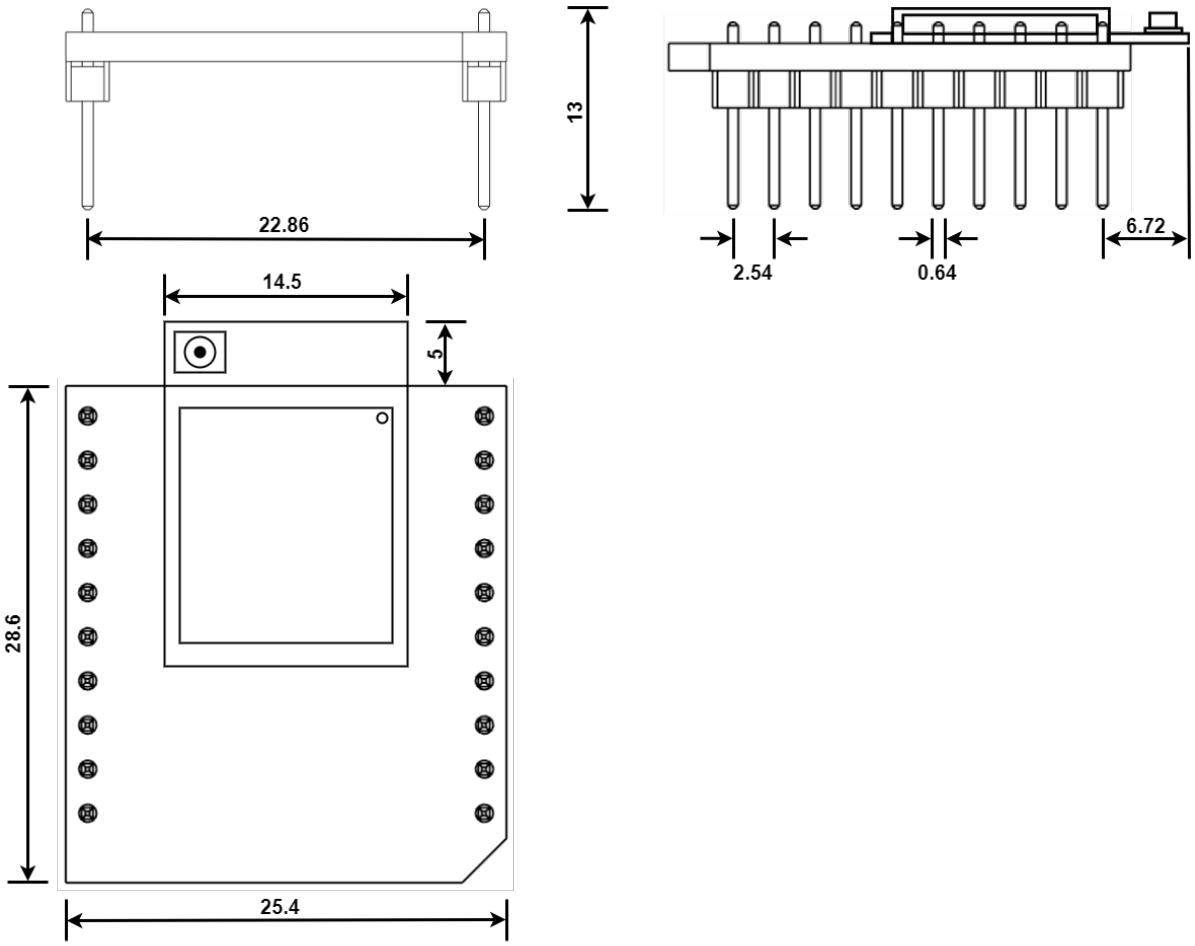

All dimensions are in millimeters (mm)

Table 4-1: JN5179 MikroBUS Module Dimensions

5 CERTIFICATIONS

For Zigbee module, pre-compliance has been done as per FCC CFR 47 part 15C. Operation is subject to the following conditions:

- This device may not cause harmful interference, and
- This device must accept any interference received, including interference that may cause undesirable operation.

FCC RF Radiation Exposure Statement

This equipment complies with FCC radiation exposure limits set forth for an uncontrolled environment. End users must follow the specific operating instructions for satisfying RF exposure compliance. This transmitter meets both portable and mobile limits as demonstrated in the RF Exposure Analysis. This transmitter must not be co-located or operating in conjunction with any other antenna or transmitter except in accordance with FCC multi-transmitter product procedures.

6 APPLICATION NOTE

6.1 Safety Precautions

These specifications are intended to preserve the quality assurance of products as individual components. Before use, check and evaluate the module's operation when mounted on your products. Abide by these specifications when using the products. These products may short-circuit. If electrical shocks, smoke, fire, and/or accidents involving human life are anticipated when a short circuit occurs, then provide the following fail-safe functions as a minimum:

- Ensure the safety of the whole system by installing a protection circuit and a protection device.
- Ensure the safety of the whole system by installing a redundant circuit or another system to prevent a single fault causing an unsafe status.

6.2 Design Engineering Notes

- Heat is the major cause of shortening the life of the modules. Avoid assembly and use of the target equipment in conditions where the product's temperature may exceed the maximum allowable. Failure to do so may result in degrading of the product's functions and damage to the product.
- If pulses or other transient loads (a large load applied in a short time) are applied to the products, before use, check and evaluate their operation when assembled onto your products.
- These products are not intended for other uses, other than under the special conditions shown below. Before using these products under such special conditions, check their performance and reliability under the said special conditions carefully, to determine whether or not they can be used in such a manner.
- In liquid, such as water, saltwater, oil, alkali, or organic solvent, or in places where liquid may splash. In direct sunlight, outdoors, or in a dusty environment. In an environment where condensation occurs. In an environment with a high concentration of harmful gas (ex. salty air, HCl, Cl2, SO2, H2S, NH3, and NOx).
- If an abnormal voltage is applied due to a problem occurring in other components or circuits, replace these products with new products because they may not be able to provide normal performance even if their electronic characteristics and appearances appear satisfactory.
- Mechanical stress during assembly of the board and operation has to be avoided.
- Pressing on parts of the metal cover or fastening objects to the metal cover is not permitted.

6.3 Storage Conditions

The module must not be stressed mechanically during storage. Do not store these products in the following conditions or the performance characteristics of the product, such as RF performance, may well be adversely affected:

- Storage in salty air or in an environment with a high concentration of corrosive gas, such as Cl_2, H_2S, NH_3, SO_2, or NO_X.
- Storage (before assembly of the end product) of the modules for more than one year after the date of delivery at your company even if all the above conditions (1) to (3) have been met, should be avoided.

FCC regulatory conformance：

This device complies with Part 15 of the FCC Rules. Operation is subject to the following two conditions:

(1) This device may not cause harmful interference.

(2) This device must accept any interference received, including interference that may cause undesired operation.

NOTE: This equipment has been tested and found to comply with the limits for a **Class B** digital device, pursuant to part 15 of the FCC Rules. These limits are designed to provide reasonable protection against harmful interference in a residential installation.

This equipment generates uses and can radiate radio frequency energy and, if not installed and used in accordance with the instructions, may cause harmful interference to radio communications. However, there is no guarantee that interference will not occur in a particular installation. If this equipment does cause harmful interference to radio or television reception, which can be determined by turning the equipment off and on, the user is encouraged to try to correct the interference by one or more of the following measures:

- Reorient or relocate the receiving antenna.
- Increase the separation between the equipment and receiver.
- Connect the equipment into an outlet on a circuit different from that to which the receiver is connected.
- Consult the dealer or an experienced radio/TV technician for help

NOTE: Unauthorized changes will result in loss of device operating privileges.

RF Exposure

This equipment complies with FCC radiation exposure limits set forth for an uncontrolled environment. This equipment should be installed and operated with minimum distance of 20 cm between the radiator and your body. This transmitter must not be co-located or operating in conjunction with any other antenna or transmitter.

IC regulatory conformance

This device complies with CAN ICES-003 (B)/NMB-003(B).

This device contains licence-exempt transmitter(s)/receiver(s) that comply with Innovation, Science and Economic Development Canada's licence-exempt RSS(s). Operation is subject to the following two conditions:

(1) This device may not cause interference.

(2) This device must accept any interference, including interference that may cause undesired operation of the device.

Cet appareil est conforme à la norme CAN ICES-003 (B)/NMB-003 (B).

Cet appareil contient des émetteurs / récepteurs exempt (s) de licence qui sont conformes aux RSS exemptes de licence d'Innovation, Sciences et Développement économique Canada. Son fonctionnement est soumis aux deux conditions suivantes:

(1) Cet appareil ne doit pas provoquer d'interférences.

(2) Cet appareil doit accepter toute interférence, y compris les interférences susceptibles de provoquer un fonctionnement indésirable de l'appareil.

RF Exposure

This equipment complies with IC radiation exposure limits set forth for an uncontrolled environment. This equipment should be installed and operated with minimum distance of 20 cm between the radiator and your body. This transmitter must not be co-located or operating in conjunction with any other antenna or transmitter.

Cet équipement est conforme aux limites d’ exposition aux rayonnements de la IC établies pour unenvironnement non contrôé. Cet équipement doit être installé et fonctionner à au moins 20cm de distance d’ un radiateur ou de votre corps.

ORIGINAL EQUIPMENT MANUFACTURER (OEM) NOTES

The OEM must certify the final end product to comply with unintentional radiators (FCC Sections 15.107 and 15.109) before declaring compliance of the final product to Part 15 of the FCC rules and regulations. Integration into devices that are directly or indirectly connected to AC lines must add with Class II Permissive Change.

The OEM must comply with the FCC labeling requirements. If the module's label is not visible when installed, then an additional permanent label must be applied on the outside of the finished product which states: "Contains transmitter module FCC ID: 2AKNO-VOLJN5179M16". Additionally, the following statement should be included on the label and in the final product's user manual: "This device complies with Part 15 of the FCC Rules. Operation is subject to the following two conditions:
(1) This device may not cause harmful interferences, and
(2) this device must accept any interference received, including interference that may cause undesired operation."

The module is limited to installation in mobile or fixed applications. Separate approval is required for all other operating configurations, including portable configuration with respect to Part 2.1093 and different antenna configurations.

A module or modules can only be used without additional authorizations if they have been tested and granted under the same intended end - use operational conditions, including simultaneous transmission operations. When they have not been tested and granted in this manner, additional testing and/or FCC application filing may be required. The most straightforward approach to address additional testing conditions is to have the grantee responsible for the certification of at least one of the modules submit a permissive change application. When having a module grantee file a permissive change is not practical or feasible, the following guidance provides some additional options for host manufacturers. Integrations using modules where additional testing and/or FCC application filing(s) may be required are: (A) a module used in devices requiring additional RF exposure compliance information (e.g., MPE evaluation or SAR testing); (B) limited and/or split modules not meeting all of the module requirements; and (C) simultaneous transmissions for independent collocated transmitters not previously granted together.

This Module is full modular approval, it is limited to OEM installation ONLY.
Integration into devices that are directly or indirectly connected to AC lines must add with Class II Permissive Change. (OEM) Integrator has to assure compliance of the entire end product include the integrated Module. Additional measurements (15B) and/or equipment authorizations (e.g. Verification) may need to be addressed depending on co-location or simultaneous transmission issues if applicable. (OEM) Integrator is reminded to assure that these installation instructions will not be made available to the end user

IC labeling requirement for the final end product:

The final end product must be labeled in a visible area with the following “Contains IC: 22256-JN5179M16”

The Host Marketing Name (HMN) must be indicated at any location on the exterior of the host product or product packaging or product literature, which shall be available with the host product or online.

Unauthorized modifications could void the user's authority to operate the equipment.

This radio transmitter [lC: 22256-JN5179M16] has been approved by Innovation, Science and Economic Development Canada to operate with the antenna types listed below, with the maximum permissible gain indicated. Antenna types not included in this list that have a gain greater than the maximum gain indicated for any type listed are strictly prohibited for use
with this device.

Frequency range	Manufacturer	Peak gain	Impedance	Antenna type
2400-2483.5MHz	NXP Semiconductor	2.1dBi	50 Ω	Columnar antenna
2400-2483.5MHz	Inventek Systems	3dBi	50 Ω	PCB Antenna