FCC SAR Compliance Test Report

For

Shenzhen EmperorTechnology Company Limited

F9，Block C，Building 1，Software Industry Base，Nanshan District，Shenzhen，China

Model: EMP2920

Test Engineer:	Lily Zhao
Report Number:	FCC17050447A-6
Report Date:	2017-05-24
FCC ID:	2AKP2-2920A
Check By:	Stars Liang
Approved By:	Michal Ling
Prepared By:	QTC Certification & Testing Co., Ltd. 2nd Floor,Bl Building,Fengyeyuan Industrial Plant,, Liuxian 2st. Road, Xin'an Street, Bao'an District,,Shenzhen,518000 Tel: +86-755-26996144 EXT:8164 Fax: +86-755-26996253

Table of contents

1 General information 4
1.1 Notes 4
1.2 Application details 4
1.3 Statement of Compliance 5
1.4 EUT Information 6
2 Testing laboratory 7
3 Test Environment 7
4 Applicant and Manufacturer 7
5 Test standard/s: 8
5.1 RF exposure limits 9
5.2 SAR Definition 9
6 SAR Measurement System 10
6.1 The Measurement System 10
6.2 Robot 10
6.3 Probe 11
6.4 Measurement procedure 11
6.5 Description of interpolation/extrapolation scheme 12
6.6 Phantom 12
6.7 Device Holder 13
6.8 Video Positioning System 14
6.9 Tissue simulating liquids: dielectric properties 15
6.10 Tissue simulating liquids: parameters 16
7 18
System Check 18
7.1 System check procedure 18
7.2 System check results 19
8 SAR Test Test Configuration 20
8.1 GSM Test Configurations 20
8.2 UMTS Test Configuration 20
8.3 LTE Test Configuration 22
8.4 Wi-Fi Test Configuration 23
8.5 WiFi 2.4G SAR Test Procedures 23
8.6 WiFi 5G SAR Test Procedures 24
9 Detailed Test Results 26
9.1 Conducted Power measurements 26
9.1.1 Conducted Power of GSM850 26
9.1.2 Conducted Power of GSM1900 27
9.1.3 Conducted Power of UMTS Band II 28
9.1.4 Conducted Power of UMTS Band V 28

9.1.5 Conducted Power of LTE Band VII 29
9.1.6 Conducted Power of LTE Band XLI 31
9.1.7 Conducted Power of Wi-Fi 2.4G 33
9.1.8 Conducted Power of BT 33
9.1.9 Tune-up power tolerance 34
9.2 SAR test results 35
9.2.1 Results overview of GSM850 38
9.2.2 Results overview of GSM1900 38
9.2.3 Results overview of UMTS Band II 39
9.2.4 Results overview of UMTS Band V 39
9.2.5 Results overview of LTE Band VII 40
9.2.6 Results overview of LTE Band XLI 41
9.2.7 Results overview of Wi-Fi 2.4G 42
10 Multiple Transmitter Information 43
10.1.1 Stand-alone SAR test exclusion 44
10.1.2 Simultaneous Transmission Possibilities 45
10.1.3 SAR Summation Scenario 46
11 Measurement uncertainty evaluation 49
11.1 Measurement uncertainty evaluation for SAR test 49
11.2 Measurement uncertainty evaluation for system check 50
12 Test equipment and ancillaries used for tests 51
Annex A: System performance verification 52
Annex B: Measurement results 52
Annex C: Calibration reports 52
Annex D: Photo documentation 53

Modified History

REV.	Modification Description	Issued Date	Remark
REV.1.0	Initial Test Report Relesse	2017-05-24	Stars Liang

1 General information

1.1 Notes

The test results of this test report relate exclusively to the test item specified in this test report. QTC Certification & Testing Co., Ltd. does not assume responsibility for any conclusions and generalisations drawn from the test results with regard to other specimens or samples of the type of the equipment represented by the test item. The test report is not to be reproduced or published in full without the prior written permission.

1.2 Application details

Date of receipt of test item: 2017-05-13

Start of test: 2017-05-17

End of test: 2017-05-22

1.3 Statement of Compliance

The maximum results of Specific Absorption Rate (SAR) found during testing for EMP2920 is as below:

Band	Position	MAX Reported SAR_{1g} (W/kg)
GSM850	Body-Worn	0.792
	Hotspot	**0.799**
GSM1900	Body-Worn	0.762
	Hotspot	0.792
UMTS Band II	Body-Worn	0.744
	Hotspot	0.797
UMTS Band V	Body-Worn	0.695
	Hotspot	0.798
LTE Band VII	Body-Worn	**0.793**
	Hotspot	0.762
LTE Band XLI	Body-Worn	0.672
	Hotspot	0.617
Wi-Fi 2.4G	Body-Worn	0.238
	Hotspot	0.560
The highest simultaneous SAR is 1.045W/kg per KDB690783 D01		

The device is in compliance with Specific Absorption Rate（SAR）for general population/uncontraolled exposure limits of 1.6 W/Kg as averaged over any 1g tissue according to the FCC rule §2.1093, the ANSI/IEEE C95.1:2005, the NCRP Report Number 86 for uncontrolled environment, according to the Industry Canada Radio Standards Specification RSS-102 for General Population/Uncontrolled exposure, and had been tested in accordance with the measurement methods and procedures specified in IEEE Std 1528-2013.

1.4 EUT Information

Device Information:			
Product Type:	ID tablet		
Model:	EMP2920		
Trade Name:	EMPEROR		
Device Type:	Portable device		
Exposure Category:	uncontrolled environment / general population		
Production Unit or Identical Prototype:	Production Unit		
Hardware version:	V1.0		
Software version :	EMP2920_J979_V1.0_20170224		
Antenna Type :	Internal Antenna		
Device Operating Configurations:			
Supporting Mode(s) :	GSM850,PCS1900, UMTS Band II, UMTS Band V, LTE Band VII , LTE Band XLI ,Wi-Fi , BT		
Modulation:	GSM(GMSK),UMTS(QPSK/16QAM),LTE(QPSK/16QAM), WiFi(OFDM/CCK),BT(GFSK/π/4-DQPSK/ 8-DPSK)		
Device Class :	Class B, No DTM Mode		
Operating Frequency Range(s)	Band	TX(MHz)	RX(MHz)
	GSM850	824~849	869~894
	GSM1900	1850~1910	1930~1990
	UMTS Band II	1850~1910	1930~1990
	UMTS Band V	824~849	869~894
	LTE Band VII	2502~2568	2622~2688
	LTE Band XLI	2496~2690	2496~2690
	Wi-Fi (2.4G)	2412-2462	
	BT	2402~2480	
GPRS class level:	GPRS class 12		
Test Channels (low-mid-high):	128-190-251(GSM850)		
	512-661-810(GSM1900)		
	9262-9400-9538(UMTS Band II)		
	4132-4182-4233(UMTS Band V)		
	20850-21100-21350(LTE Band VII)		
	39750-40620-41490(LTE Band XLI)		
	1-6-11 (Wi-Fi 2.4G)		
	0-39-78(BT) 0-19-39(BLE)		
Power Source:	3.7 VDC/8000mAh Rechargeable Battery		

2 Testing laboratory

Test Site	QTC Certification & Testing Co., Ltd.
Test Location	2nd Floor,Bl Building,Fengyeyuan Industrial Plant,, Liuxian 2st. Road, Xin'an Street, Bao'an District,,Shenzhen,518000
Telephone	+86-755-26996144 EXT:8164
Fax	+86-755-26996253

3 Test Environment

	Required	Actual
Ambient temperature:	18 – 25 °C	22 ± 2 °C
Tissue Simulating liquid:	22 ± 2 °C	22 ± 2 °C
Relative humidity content:	30 – 70 %	30 – 70 %

4 Applicant and Manufacturer

Applicant/Client Name:	Shenzhen EmperorTechnology Company Limited
Applicant Address:	F9，Block C，Building 1，Software Industry Base，Nanshan District，Shenzhen，China
Manufacturer Name:	Shenzhen EmperorTechnology Company Limited
Manufacturer Address:	F9，Block C，Building 1，Software Industry Base，Nanshan District，Shenzhen，China

5 Test standard/s:

ANSI Std C95.1-2005	Safety Levels with Respect to Human Exposure to Radio Frequency Electromagnetic Fields, 3 kHz to 300 GHz.
IEEE Std 1528-2013	Recommended Practice for Determining the Peak Spatial-Average Specific Absorption Rate (SAR) in the Human Head from Wireless Communications Devices: Measurement Techniques
RSS-102	Radio Frequency Exposure Compliance of Radiocommunication Apparatus (All Frequency Bands (Issue 5 March 2015)
KDB447498 D01	General RF Exposure Guidance v06
KDB648474 D04	Head set SAR v01r03
KDB941225 D06	Hot Spot SAR V02r01
KDB941225 D01	3G SAR Measurement Procedures
KDB248227 D01	SAR meas for 802.11 a/b/g v02r02
KDB865664 D01	SAR Measurement 100 MHz to 6 GHz v01r04
KDB865664 D02	RF Exposure Reporting v01r02
KDB 941225 D05	SAR Evaluation Considerations for LTE Devices
KDB941225 D05A	LTE Rel.10 KDB Inquiry Sheet v01r02
KDB616217 D04	SAR for laptop and tablets v01r02

5.1 RF exposure limits

Human Exposure	Uncontrolled Environment General Population	Controlled Environment Occupational
Spatial Peak SAR* (Brain/Body/Arms/Legs)	**1.60 mW/g**	8.00 mW/g
Spatial Average SAR** (Whole Body)	0.08 mW/g	0.40 mW/g
Spatial Peak SAR*** (Heads/Feet/Ankle/Wrist)	4.00 mW/g	20.00 mW/g

The limit applied in this test report is shown in bold letters

Notes:

* The Spatial Peak value of the SAR averaged over any 1 gram of tissue (defined as a tissue volume in the shape of a cube) and over the appropriate averaging time.

** The Spatial Average value of the SAR averaged over the whole body.

*** The Spatial Peak value of the SAR averaged over any 10 grams of tissue (defined as a tissue volume in the shape of a cube) and over the appropriate averaging time.

Uncontrolled Environments are defined as locations where there is the exposure of individuals who have no knowledge or control of their exposure.

Controlled Environments are defined as locations where there is exposure that may be incurred by persons who are aware of the potential for exposure, (i.e. as a result of employment or occupation.

5.2 SAR Definition

Specific Absorption Rate is defined as the time derivative (rate) of the incremental energy (dW) absorbed by(dissipated in) an incremental mass (dm) contained in a volume element (dV) of a given density (ρ).

$$SAR = \frac{d}{dt}\left(\frac{dW}{dm}\right) = \frac{d}{dt}\left(\frac{dW}{\rho dV}\right)$$

SAR is expressed in units of watts per kilogram (W/kg). SAR can be related to the electric field at a point by

$$SAR = \frac{\sigma \mid E \mid^2}{\rho}$$

where:

σ = conductivity of the tissue (S/m)

ρ = mass density of the tissue (kg/m^3)

E = rms electric field strength (V/m)

6 SAR Measurement System

6.1 The Measurement System

Comosar is a system that is able to determine the SAR distribution inside a phantom of human being according to different standards. The Comosar system consists of the following items:

- Main computer to control all the system
- 6 axis robot
- Data acquisition system
- Miniature E-field probe
- Device holder
- Head simulating tissue

The following figure shows the system.

The EUT under test operating at the maximum power level is placed in the phone holder, under the phantom, which is filled with head simulating liquid. The E-Field probe measures the electric field inside the phantom. The OpenSAR software computes the results to give a SAR value in a 1g or 10g mass.

6.2 Robot

The COMOSAR system uses the high precision robots KR 6 R900 sixx type out of the newer series from Satimo SA (France).For the 6-axis controller COMOSAR system, the KUKA robot
controller version from Satimo is used. The KR 6 R900 sixx robot series have many features that are important for
our application:

- High precision (repeatability 0.02 mm)
- High reliability (industrial design)
- Jerk-free straight movements
- Low ELF interference (the closed metallic construction shields against motor control fields)
- 6-axis controller

6.3 Probe

For the measurements the Specific Dosimetric E-Field Probe SSE 5 with following specifications is used

Figure 1 – MVG COMOSAR Dosimetric E field Dipole

- Dynamic range: 0.01-100 W/kg

Probe Length	330 mm
Length of Individual Dipoles	4.5 mm
Maximum external diameter	8 mm
Probe Tip External Diameter	5 mm
Distance between dipoles / probe extremity	2.7 mm

- Calibration range: 300MHz to 3GHz for head & body simulating liquid.

Angle between probe axis (evaluation axis) and suface normal line:less than 30°

Figure 2 – MVG COMOSAR Dosimetric E field Dipole

Dynamic range: 0.01-100 W/kg

Probe Length	330 mm
Length of Individual Dipoles	2 mm
Maximum external diameter	8 mm
Probe Tip External Diameter	2.5 mm
Distance between dipoles / probe extremity	1 mm

- Calibration range: 5GHz to 6GHz for head & body simulating liquid.

Angle between probe axis (evaluation axis) and suface normal line:less than 30°

6.4 Measurement procedure

The following steps are used for each test position

- Establish a call with the maximum output power with a base station simulator.The connection between the mobile and the base station simulator is established via air interface.
- Measurement of the local E-field value at a fixed location.This value serves as a reference value for calculating a possible power drift.
- Measurement of the SAR distribution with a grid of 8 to 16 mm * 8 to 16 mm and a constant distance to the inner surface of the phantom.Since the sensors can not directly measure at the inner phantom surface,the values between the sensors and the inner phantom surface are extrapolated.With these values the area of the maximum SAR is calculated by an interpolation scheme.
- Around this point,a cube of 30 * 30 * 30 mm or 32 * 32 * 32 mm is assessed by measuring 5 or 8 * 5 or 8 * 4 or 5 mm.With these data,the peak spatial-average SAR value can be calculated.

Spatial Peak SAR Evaluation

The procedure for spatial peak SAR evaluation has been implemented according to the test standard. It can be conducted for 1g and 10g, as well as for user-specific masses. The SATIMO software includes all numerical procedures necessary to evaluate the spatial peak SAR value.

The base for the evaluation is a "cube" measurement. The measured volume must include the 1g and 10g cubes with the highest averaged SAR values. For that purpose, the center of the measured volume is aligned to the interpolated peak SAR value of a previously performed area scan.

The entire evaluation of the spatial peak values is performed within the post-processing engine. The system always gives the maximum values for the 1g and 10g cubes. The algorithm to find the cube with highest averaged SAR is divided into the following stages:

(a) Extraction of the measured data (grid and values) from the Zoom Scan
(b) Calculation of the SAR value at every measurement point based on all stored data (A/D values and measurement parameters)
(c) Generation of a high-resolution mesh within the measured volume
(d) Interpolation of all measured values form the measurement grid to the high-resolution grid
(e) Extrapolation of the entire 3-D field distribution to the phantom surface over the distance from sensor to surface
(f) Calculation of the averaged SAR within masses of 1g and 10g

SAR Averaged Methods
In SATIMO, the interpolation and extrapolation are both based on the modified Quadratic Shepard's method. The interpolation scheme combines a least-square fitted function method and a weighted average method which are the two basic types of computational interpolation and approximation.

Extrapolation routines are used to obtain SAR values between the lowest measurement points and the inner phantom surface. The extrapolation distance is determined by the surface detection distance and the probe sensor offset. The uncertainty increases with the extrapolation distance. To keep the uncertainty within 1% for the 1 g and 10 g cubes, the extrapolation distance should not be larger than 5 mm.

6.5 Description of interpolation/extrapolation scheme

- The local SAR inside the phantom is measured using small dipole sensing elements inside a probe body.The probe tip must not be in contact with the phantom surface in order to minimise measurements errors,but the highest local SAR will occur at the surface of the phantom.

- An extrapolation is using to determinate this highest local SAR values.
  The extrapolation is based on afourth-order least-square polynomial fit of measured data.The local SAR value is then extrapolated from the liquid surface with a 1 mm step.

- The measurements have to be performed over a limited time(due to the duration of the battery) so the step of measurement is high.It could vary between 5 and 8 mm.To obtain an accurate assessment of the maximum SAR average over 10 grams and 1gram requires a very fine resolution in the three dimensional scanned data array.

6.6 Phantom

For the measurements the Specific Anthropomorphic Mannequin (SAM) defined by the IEEE SCC-34/SC2 group is used. The phantom is a polyurethane shell integrated in a wooden table. The thickness of the phantom amounts to 2mm +/- 0.2mm. It enables the dosimetric evaluation of left and right phone usage and includes an additional flat phantom part for the simplified performance check. The phantom set-up includes a cover, which prevents the evaporation of the liquid.

System Material	Permittivity	Loss Tangent
Delrin	3.7	0.005

6.7 Device Holder

The positioning system allows obtaining cheek and tilting position with a very good accuracy. In compliance with CENELEC, the tilt angle uncertainty is lower than 1°.

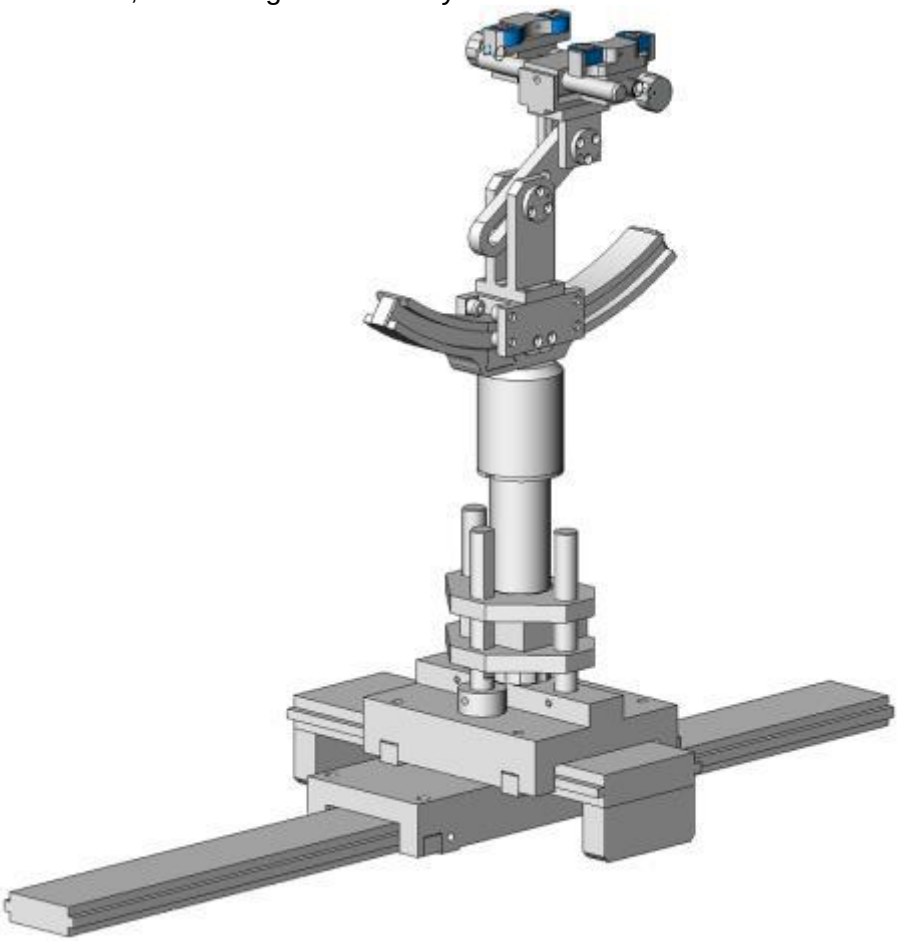

Device holder

System Material	Permittivity	Loss Tangent
Delrin	3.7	0.005

6.8 Video Positioning System

- The video positioning system is used in OpenSAR to check the probe. Which is composed of a camera, LED, mirror and mechanical parts. The camera is piloted by the main computer with firewire link.

- During the process, the actual position of the probe tip with respect to the robot arm is measured, as well as the probe length and the horizontal probe offset. The software then corrects all movements, such that the robot coordinates are valid for the probe tip.

- The repeatability of this process is better than 0.1 mm. If a position has been taught with an aligned probe, the same position will be reached with another aligned probe within 0.1 mm, even if the other probe has different dimensions. During probe rotations, the probe tip will keep its actual position.

6.9 Tissue simulating liquids: dielectric properties

For SAR measurement of the field distribution inside the phantom, the phantom must be filled with homogeneous tissue simulating liquid to a depth of at least 15 cm. For head SAR testing, the liquid height from the ear reference point (ERP) of the phantom to the liquid top surface is larger than 15 cm. For body SAR testing, the liquid height from the center of the flat phantom to the liquid top surface is larger than 15 cm. The simulating liquids should be checked at the beginning of a series of SAR measurements to determine of the dielectic parameter are within the tolerances of the specified target values. The measured conductivity and relative permittivity should be within ± 5% of the target values.

The following materials are used for producing the tissue-equivalent materials.
(Liquids used for tests are marked with☒):

Ingredients(% of weight)	**Frequency (MHz)**					
frequency band	☐ 750	☒ 835	☐ 1800	☒ 1900	☒ 2450	☒ 2600
Tissue Type	Head	Head	Head	Head	Head	Head
Water	39.2	41.45	52.64	55.242	62.7	55.242
Salt (NaCl)	2.7	1.45	0.36	0.306	0.5	0.306
Sugar	57.0	56.0	0.0	0.0	0.0	0.0
HEC	0.0	1.0	0.0	0.0	0.0	0.0
Bactericide	0.0	0.1	0.0	0.0	0.0	0.0
Triton X-100	0.0	0.0	0.0	0.0	36.8	0.0
DGBE	0.0	0.0	47.0	44.542	0.0	44.452
Ingredients(% of weight)	**Frequency (MHz)**					
frequency band	☐ 750	☒ 835	☐ 1800	☒ 1900	☒ 2450	☒ 2600
Tissue Type	Body	Body	Body	Body	Body	Body
Water	50.30	52.4	69.91	69.91	73.2	64.493
Salt (NaCl)	1.60	1.40	0.13	0.13	0.04	0.024
Sugar	47.0	45.0	0.0	0.0	0.0	0.0
HEC	0.0	1.0	0.0	0.0	0.0	0.0
Bactericide	0.0	0.1	0.0	0.0	0.0	0.0
Triton X-100	0.0	0.0	0.0	0.0	0.0	0.0
DGBE	0.0	0.0	29.96	29.96	26.7	32.252

Salt: 99+% Pure Sodium Chloride
Sugar: 98+% Pure Sucrose
Water: De-ionized, 16MΩ+ resistivity
HEC: Hydroxyethyl Cellulose
DGBE: 99+% Di(ethylene glycol) butyl ether, [2-(2-butoxyethoxy)ethanol]
Triton X-100(ultra pure): Polyethylene glycol mono [4-(1,1,3,3-tetramethylbutyl)phenyl]ether

☐ Simulating Head Liquid for 5G(HBBL3500-5800MHz), Manufactured by SPEAG:

Ingredients	**(% by weight)**
Water	50-65%
Mineral oil	10-30%
Emulsifiers	8-25%
Sodium salt	0-1.5%

☐ Simulating Body Liquid for 5G(MBBL3500-5800MHz),Manufactured by SPEAG:

Ingredients	**(% by weight)**
Water	60-80%
Esters,Emulsifiers,Inhibitors	20-40%
Sodium salt	0-1.5%

6.10 Tissue simulating liquids: parameters

Tissue Type	Measured Frequency (MHz)	Target Tissue				Measured Tissue		Liquid Temp.	Test Date
		Target Permittivity ε_r	Range of ±5%	Target Conductivity σ (S/m)	Range of ±5%	ε_r	σ (S/m)		
835MHz Head	825	41.60	39.52~43.68	0.90	0.86~0.95	40.34	0.91	21.6°C	2017-05-17
	835	41.50	39.43~43.58	0.90	0.86~0.95	40.33	0.92		
	850	41.50	39.43~43.58	0.92	0.87~0.97	40.11	0.94		
835MHz Body	825	55.20	52.44~57.96	0.97	0.92~1.02	54.04	0.98		
	835	55.20	52.44~57.96	0.97	0.92~1.02	53.93	0.99		
	850	55.20	52.44~57.96	0.99	0.94~1.04	53.69	1.01		
1900MHz Head	1850	40.00	38.00~42.00	1.40	1.33~1.47	39.93	1.37	21.6°C	2017-05-24
	1880	40.00	38.00~42.00	1.40	1.33~1.47	39.91	1.40		
	1900	40.00	38.00~42.00	1.40	1.33~1.47	39.98	1.41		
	1910	40.00	38.00~42.00	1.40	1.33~1.47	39.97	1.42		
1900MHz Body	1850	53.30	50.64~55.97	1.52	1.44~1.60	53.23	1.49		
	1880	53.30	50.64~55.97	1.52	1.44~1.60	53.36	1.53		
	1900	53.30	50.64~55.97	1.52	1.44~1.60	53.37	1.56		
	1910	53.30	50.64~55.97	1.52	1.44~1.60	53.37	1.57		
2450MHz Head	2410	39.30	37.34~41.26	1.76	1.67~1.85	39.22	1.78	21.6°C	2017-05-50
	2435	39.20	37.24~41.16	1.79	1.70~1.88	39.25	1.77		
	2450	39.20	37.24~41.16	1.80	1.71~1.89	39.24	1.76		
	2460	39.20	37.24~41.16	1.81	1.72~1.90	39.20	1.76		
2450MHz Body	2410	52.80	50.16~55.44	1.91	1.81~2.00	52.72	1.92		
	2435	52.70	50.07~55.34	1.94	1.84~2.04	52.75	1.92		
	2450	52.70	50.07~55.34	1.95	1.85~2.05	52.74	1.91		
	2460	52.70	50.07~55.34	1.96	1.86~2.06	52.70	1.91		
2600MHz Head	2510	39.00	37.05~40.95	1.96	1.86~2.06	38.87	1.93	21.6°C	2017-05-22
	2535	39.00	37.05~40.95	1.96	1.86~2.06	38.58	1.93		
	2560	39.00	37.05~40.95	1.96	1.86~2.06	38.98	2.02		
	2600	39.00	37.05~40.95	1.96	1.86~2.06	52.50	2.02		
2600MHz Body	2510	52.50	49.90~55.11	2.16	2.05~2.27	52.21	2.05		
	2535	52.50	49.90~55.11	2.16	2.05~2.27	51.92	2.06		
	2560	52.50	49.90~55.11	2.16	2.05~2.27	52.01	2.09		

	2600	52.50	49.90~55.11	2.16	2.05~2.27	38.87	1.93		
ε_r= Relative permittivity, σ= Conductivity									

7 System Check

7.1 System check procedure

The System check is performed by using a System check dipole which is positioned parallel to the planar part of the SAM phantom at the reference point. The distance of the dipole to the SAM phantom is determined by a spacer. The dipole is connected to the signal source consisting of signal generator and amplifier via a directional coupler, N-connector cable and adaption to SMA. It is fed with a power of 100 mW. To adjust this power a power meter is used. The power sensor is connected to the cable before the System check to measure the power at this point and do adjustments at the signal generator. At the outputs of the directional coupler both return loss as well as forward power are controlled during the validation to make sure that emitted power at the dipole is kept constant. This can also be checked by the power drift measurement after the test (result on plot).

System check results have to be equal or near the values determined during dipole calibration (target SAR in table above) with the relevant liquids and test system.

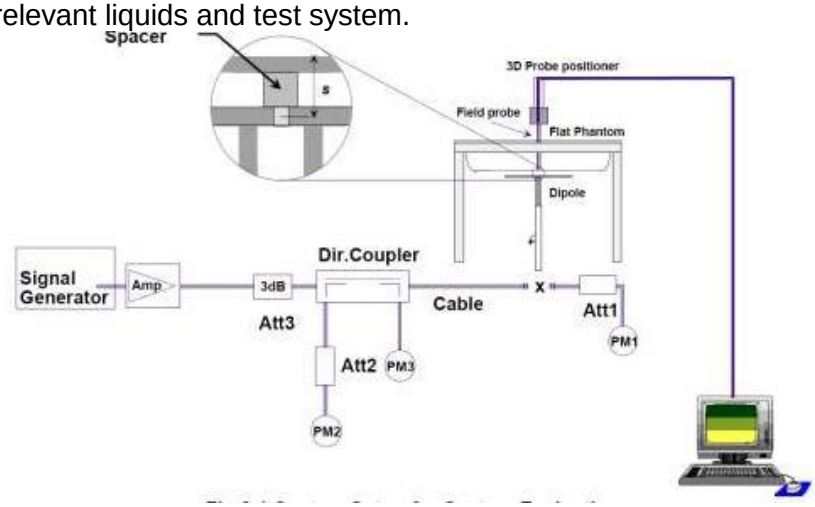

7.2 System check results

The system Check is performed for verifying the accuracy of the complete measurement system and performance of the software.The following table shows System check results for all frequency bands and tissue liquids used during the tests (plot(s) see annex A).

System Check	Target SAR (1W) (+/-10%)				Measured SAR (Normalized to 1W)		Liquid Temp.	Test Date
	1-g (mW/g)	Range of ±10% 1-g (mW/g)	10-g (mW/g)	Range of ±10% 10-g (mW/g)	1-g (mW/g)	10-g (mW/g)		
D835V2 Head	9.82	8.84~10.80	6.35	5.72~6.99	9.700	6.150	21.6°C	2017-05-17
D1900V2 Head	38.93	35.04~42.82	20.27	18.45~22.55	39.980	21.070	21.6°C	2017-05-24
D2450V2 Head	53.41	48.07~58.75	23.95	21.56~26.35	53.930	24.530	21.6°C	2017-05-20
D2600V2 Head	56.88	51.20~62.56	24.92	22.43~27.41	53.180	23.430	21.6°C	2017-05-22
D835V2 Body	9.41	8.47~10.35	6.22	5.99~6.84	10.150	6.450	21.6°C	2017-05-17
D1900V2 Body	38.73	34.86~42.60	20.48	18.43~22.53	39.330	20.940	21.6°C	2017-05-24
D2450V2 Body	51.39	46.25~56.53	23.63	21.27~25.99	54.330	23.330	21.6°C	2017-05-20
D2600V2 Body	54.54	49.09~59.99	24.37	21.94~26.80	57.860	25.600	21.6°C	2017-05-22
Note: All SAR values are normalized to 1W forward power.								

8 SAR Test Test Configuration

8.1 GSM Test Configurations

SAR tests for GSM850 and GSM1900, a communication link is set up with a base station by air link. Using CMU200 the power lever is set to “5”and “0” in SAR of GSM850 and GSM1900. The tests in the band of GSM 850 and GSM 1900 are performed in the mode of GPRS/EGPRS function. Since the GPRS class is 12 for this EUT, it has at most 4 timeslots in uplink and at most 4 timeslots in downlink, the maximum total timeslot is 5.

When SAR tests for EGPRS mode is necessary, GMSK modulation should be used to minimize SAR measurement error due to higher peak-to-average power (PAR) ratios inherent in 8-PSK.

8.2 UMTS Test Configuration

1) Output Power Verification

Maximum output power is verified on the high, middle and low channels according to procedures described in section 5.2 of 3GPP TS 34.121, using the appropriate RMC or AMR with TPC (transmit power control) set to all “1"s” for WCDMA/HSDPA or by applying the required inner loop power control procedures to maintain maximum output power while HSUPA is active. Results for all applicable physical channel configurations (DPCCH, DPDCHn and spreading codes, HSDPA, HSPA) are requied in the SAR report. All configurations that are not supported by the Headset or cannot be measured due to technical or equipment limitations must be clearly identified.

2) WCDMA

a. Head SAR Measurements

SAR for next to the ear head exposure is measured using a 12.2 kbps RMC with TPC bits configured to all “1"s”. The 3G SAR test reduction procedure is applied to AMR configurations with 12.2 kbps RMC as the primary mode. Otherwise, SAR is measured for 12.2 kbps AMR in 3.4 kbps SRB (signaling radio bearer) using the highest reported SAR configuration in 12.2 kbps RMC for head exposure.

b. Body SAR Measurements

SAR for body-worn accessory configurations is measured using a 12.2 kbps RMC with TPC bits configured to all “1" s”. The 3G SAR test reduction procedure is applied to other spreading codes and multiple DPDCHn configurations supported by the Headset with 12.2 kbps RMC as the primary mode

3) HSDPA

SAR for body exposure configurations is measured according to the “Body SAR Measurements"" procedures of 3G device. When the maximum output power and tune-up tolerance specified for production units in a secondary mode is ≤ ¼ dB higher than the primary mode or when the highest reported SAR of the primary mode is scaled by the ratio of specified maximum output power and tune-up tolerance of secondary to primary mode and the adjusted SAR is ≤ 1.2 W/kg, SAR measurement is not required for the secondary mode. This is referred to as the 3G SAR test reduction procedure in the following SAR test guidance, where the primary mode is identified in the applicable wireless mode test procedures and the secondary mode is wireless mode being considered for SAR test reduction by that procedure. When the 3G SAR test reduction procedure is not satisfied, it is identified as “otherwise” in the applicable procedures; SAR measurement is required for the secondary mode.

Per KDB941225 D01, the 3G SAR test reduction procedure is applied to HSDPA body configurations with 12.2 kbps RMC as the primary mode. Otherwise, SAR is measured for HSDPA using the HSDPA body SAR procedures for the highest reported SAR body exposure configuration in 12.2 kbps RMC.

HSDPA should be configured according to UE category of a test device. The number of HS-DSCH/HS-PDSCHs, HAPRQ processes, minimum inter-TTI interval, transport block sizes and RV coding sequence are defined by the H-set. To maintain a consistent test configuration and stable transmission condition, QPSK is used in the H-set for SAR testing. HS-DPCCH should be configured with a CQI feedback cycle of 4ms with a CQI repetition factor of 2 to maintain a constant rate of active CQI slots. The β c andβ d gain factors for DPCCH and DPDCH were set according to the values in the below table, □ hs for HSDPCCH is set automatically to the correct value when ΔACK, ΔNACK, ΔCQI = 8. The variation of the β c /β d ratio causes a power reduction at sub-tests 2 - 4.

Sub-test	β_c	β_d	β_d (SF)	β_c/β_d	β_{hs} (1)	CM(dB)(2)	MPR (dB)
1	2/15	15/15	64	2/15	4/15	0.0	0
2	12/15(3)	15/15(3)	64	12/15(3)	24/15	1.0	0
3	15/15	8/15	64	15/8	30/15	1.5	0.5
4	15/15	4/15	64	15/4	30/15	1.5	0.5

Note 1: △ACK, △NACK and △CQI = 8 $A_{hs} = \beta_{hs}/\beta_c = 30/15$ $\beta_{hs} = 30/15 * \beta_c$

Note 2 : CM=1 for β_c/β_d= 12/15, β_{hs}/β_c = 24/15. For all other combinations of DPDCH,DPCCH and HS-DPCCH the MPR is based on the relative CM difference. This is applicable for only UEs that support HSDPA in release 6 and later releases.

Note 3 : For subtest 2 the β_c/β_d ratio of 12/15 for the TFC during the measurement period (TF1, TF0) is achieved by setting the signalled gain factors for the reference TFC (TF1,TF1) to β_c = 11/15 and β_d = 15/15

The measurements were performed with a Fixed Reference Channel (FRC) and H-Set 1 QPSK.:

Parameter	Value
Nominal average inf. bit rate	534 kbit/s
Inter-TTI Distance	3 TTI's
Number of HARQ Processes	2 Processes
Information Bit Payload	3202 Bits
MAC-d PDU size	336 Bits
Number Code Blocks	1 Block
Binary Channel Bits Per TTI	4800 Bits
Total Available SMLs in UE	19200 SMLs
Number of SMLs per HARQ Process	9600 SMLs
Coding Rate	0.67
Number of Physical Channel Codes	5

4)HSUPA

SAR for body exposure configurations is measured according to the "Body SAR Measurements"" procedures of 3G device. When the maximum output power and tune-up tolerance specified for production units in a secondary mode is ≤ ¼ dB higher than the primary mode or when the highest reported SAR of the primary mode is scaled by the ratio of specified maximum output power and tune-up tolerance of secondary to primary mode and the adjusted SAR is ≤ 1.2 W/kg, SAR measurement is not required for the secondary mode.

Per KDB941225 D01v03, the 3G SAR test reduction procedure is applied to HSPA (HSUPA/HSDPA with RMC) body configurations with 12.2 kbps RMC as the primary mode. Otherwise, SAR is measured for HSPA using the HSPA body SAR procedures for the highest reported body exposure SAR configuration in 12.2 kbps RMC.

8.3 LTE Test Configuration

SAR for LTE band exposure configurations is measured according to the procedures of KDB 941225 D05 SAR for LTE Devices. The CMW500 WideBand Radio Communication Tester was used for LTE output power measurements and SAR testing. Closed loop power control was used so the UE transmits with maximum output power during SAR testing.SAR test were performed with the same number of RB and RB offsets transmitting on all TTI frames(Maximum TTI)

1) Spectrum Plots for RB configurations

A properly configured base station simulator was used for LTE output power measurements and SAR testing.Therefore, spectrum plots for RB configurations were not required to be included in this report.

2) MPR

When MPR is implemented permanently within the UE, regardless of network requirements, only those RB configurations allowed by 3GPP for the channel bandwidth and modulation combinations may be tested with MPR active. Configurations with RB allocations less than the RB thresholds required by 3GPP must be tested without MPR. The allowed Maximum Power Reduction (MPR) for the maximum output power due to higher order modulation and transmit bandwidth configuration (resource blocks) is specified in Table 6.2.3-1 of the 3GPP TS36.101.

Table 6.2.3-1: Maximum Power Reduction (MPR) for Power Class 3

Modulation	Channel bandwidth / Transmission bandwidth (RB)						MPR (dB)
	1.4 MHz	3.0 MHz	5 MHz	10 MHz	15 MHz	20 MHz	
QPSK	> 5	> 4	> 8	> 12	> 16	> 18	≤ 1
16 QAM	≤ 5	≤ 4	≤ 8	≤ 12	≤ 16	≤ 18	≤ 1
16 QAM	> 5	> 4	> 8	> 12	> 16	> 18	≤ 2

3) A-MPR

A-MPR(Additional MPR) has been disabled for all SAR tests by using Network Signalling Value of “NS_01”on the base station simulator.

4) LTE procedures for SAR testing

A) Largest channel bandwidth standalone SAR test requirements

i) QPSK with 1 RB allocation

Start with the largest channel bandwidth and measure SAR for QPSK with 1 RB allocation, using the RB offset and required test channel combination with the highest maximum output power for RB offsets at the upper edge, middle and lower edge of each required test channel. When the reported SAR is ⩽ 0.8 W/kg, testing of the remaining RB offset configurations and required test channels is not required for 1 RB allocation; otherwise, SAR is required for the remaining required test channels and only for the RB offset configuration with the highest output power for that channel. When the reported SAR of a required test channel is > 1.45 W/kg, SAR is required for all three RB offset configurations for that required test channel.

ii) QPSK with 50% RB allocation

The procedures required for 1 RB allocation in i) are applied to measure the SAR for QPSK with 50% RB allocation.

iii) QPSK with 100% RB allocation

For QPSK with 100% RB allocation, SAR is not required when the highest maximum output power for 100 % RB allocation is less than the highest maximum output power in 50% and 1 RB allocations and the highest reported SAR for 1 RB and 50% RB allocation in i) and ii) are ⩽ 0.8 W/kg. Otherwise, SAR is measured for the highest output power channel and if the reported SAR is > 1.45 W/kg, the remaining required test channels must also be tested.

iv) Higher order modulations

For each modulation besides QPSK; e.g., 16-QAM, 64-QAM, apply the QPSK procedures in above sections to determine the QAM configurations that may need SAR measurement. For each configuration identified as required for testing, SAR is required only when the highest maximum output power for the configuration in the higher order modulation is > ½ dB higher than the same configuration in QPSK or when the reported SAR for the QPSK configuration is > 1.45 W/kg.

B) Other channel bandwidth standalone SAR test requirements

For the other channel bandwidths used by the device in a frequency band, apply all the procedures required for the largest channel bandwidth in section A) to determine the channels and RB configurations that need SAR testing and only measure SAR when the highest maximum output power of a configuration requiring testing in the smaller channel bandwidth is > ½ dB higher than the equivalent channel configurations in the largest channel bandwidth configuration or the reported SAR of a configuration for the largest channel bandwidth is > 1.45 W/kg.

5) TDD LTE test configuration

According to KDB 941225 D05 SAR for LTE Devices v02r04, for Time-Division Duplex (TDD) systems, SAR must be tested using a fixed periodic duty factor according to the highest transmission duty factor implemented for the device and supported by the defined 3GPP LTE TDD configurations.

8.4 Wi-Fi Test Configuration

For the 802.11b/g SAR tests, a communication link is set up with the test mode software for Wi-Fi mode test. The Absolute Radio Frequency Channel Number(ARFCN) is allocated to 1 ,6 and 11 respectively in the case of 2450 MHz.During the test,at the each test frequency channel, the EUT is operated at the RF continuous emission mode. Each channel should be tested at the lowest data rate.
802.11b/g operating modes are tested independently according to the service requirements in each frquency band. 802.11b/g modes are tested on channel 1, 6, 11; however,if output power reduction is necessary for channels 1 and/or 11 to meet restricted band requirements the highest output channel closest to each of these channels must be tested instead.
SAR is not required for 802.11g/n channels when the maximum average output power is less than 0.25dB higher than that measured on the corresponding 802.11b channels.

Mode	Band	GHz	Channel	"Default Test Channels"	
				802.11b	802.11g
802.11b/g	2.4 GHz	2412	1#	√	△
		2437	6	√	△
		2462	11#	√	△

Notes:

√ = "default test channels"

△= possible 802.11g channels with maximum average output ¼ dB the "default test channels"

= when output power is reduced for channel 1 and /or 11 to meet restricted band requirements the highest output channels closest to each of these channels should be tested.

802.11 Test Channels per FCC Requirements

8.5 WiFi 2.4G SAR Test Procedures

Separate SAR procedures are applied to DSSS and OFDM configurations in the 2.4 GHz band to simplify DSSS test requirements. For 802.11b DSSS SAR measurements, DSSS SAR procedure applies to fixed exposure test position and initial test position procedure applies to multiple exposure test positions.

A)802.11b DSSS SAR Test Requirements

SAR is measured for 2.4 GHz 802.11b DSSS using either a fixed test position or, when applicable, the initial test position procedure. SAR test reduction is determined according to the following:
1) When the reported SAR of the highest measured maximum output power channel (section 3.1 of of KDB 248227D01v02) for the exposure configuration is ≤ 0.8 W/kg, no further SAR testing is required for 802.11b DSSS in that exposure configuration.
2) When the reported SAR is > 0.8 W/kg, SAR is required for that exposure configuration using the next highest measured output power channel. When any reported SAR is > 1.2 W/kg, SAR is required for the third channel; i.e., all channels require testing.

B) 2.4GHz 802.11g/n OFDM SAR Test Exclusion Requirements

When SAR measurement is required for 2.4 GHz 802.11g/n OFDM configurations, the measurement and test reduction procedures for OFDM are applied (section 5.3 of of KDB 248227D01v02r01). SAR is not required for the following 2.4 GHz OFDM conditions.
1) When KDB Publication 447498 SAR test exclusion applies to the OFDM configuration.
2) When the highest reported SAR for DSSS is adjusted by the ratio of OFDM to DSSS specified maximum output power and the adjusted SAR is ≤ 1.2 W/kg.

C) SAR Test Requirements for OFDM configurations

When SAR measurement is required for 802.11 g/n OFDM configurations, each standalone and frequency aggregated band is considered separately for SAR test reduction. In applying the initial test configuration and subsequent test configuration procedures, the 802.11 transmission configuration with the highest specified maximum output power and the channel within a test configuration with the highest measured maximum output power should be clearly distinguished to apply the procedures.

8.6 WiFi 5G SAR Test Procedures

A) U-NII-1 and U-NII-2A Bands

For devices that operate in only one of the U-NII-1 and U-NII-2A bands, the normally required SAR procedures for OFDM configurations are applied. For devices that operate in both U-NII bands using the same transmitter and antenna(s), SAR test reduction is determined according to the following：

1) When the same maximum output power is specified for both bands, begin SAR measurement in U- NII-2A band by applying the OFDM SAR requirements. If the highest reported SAR for a test configuration is ≤ 1.2 W/kg, SAR is not required for U-NII-1 band for that configuration (802.11 mode and exposure condition); otherwise, both bands are tested independently for SAR.

2) When different maximum output power is specified for the bands, begin SAR measurement in the band with higher specified maximum output power. The highest reported SAR for the tested configuration is adjusted by the ratio of lower to higher specified maximum output power for the two bands. When the adjusted SAR is ≤ 1.2 W/kg, SAR is not required for the band with lower maximum output power in that test configuration; otherwise, both bands are tested independently for SAR.

3) The two U-NII bands may be aggregated to support a 160 MHz channel on channel number 50.

Without additional testing, the maximum output power for this is limited to the lower of the maximum output power certified for the two bands. When SAR measurement is required for at least one of the bands and the highest reported SAR adjusted by the ratio of specified maximum output power of aggregated to standalone band is > 1.2 W/kg, SAR is required for the 160 MHz channel. This procedure does not apply to an aggregated band with maximum output higher than the standalone band(s); the aggregated band must be tested independently for SAR. SAR is not required when the 160 MHz channel is operating at a reduced maximum power and also qualifies for SAR test exclusion.

B) U-NII-2C and U-NII-3 Bands

The frequency range covered by these bands is 380 MHz (5.47 – 5.85 GHz), which requires a minimum of at least two SAR probe calibration frequency points to support SAR measurements. when Terminal Doppler Weather Radar (TDWR) restriction applies, all channels that operate at 5.60 – 5.65 GHz must be included to apply the SAR test reduction and measurement procedures.

When the same transmitter and antenna(s) are used for U-NII-2C band and U-NII-3 band or 5.8 GHz band of §15.247, the bands may be aggregated to enable additional channels with 20, 40 or 80 MHz bandwidth to span across the band gap, as illustrated in Appendix B. The maximum output power for the additional band gap channels is limited to the lower of those certified for the bands. Unless band gap channels are permanently disabled, they must be considered for SAR testing. The frequency range covered by these bands is 380 MHz (5.47 – 5.85 GHz), which requires a minimum of at least two SAR probe calibration frequency points to support SAR measurements. To maintain SAR measurement accuracy and to facilitate test reduction, the channels in U-NII-2C band above 5.65 GHz may be grouped with the 5.8 GHz channels in U-NII-3 or §15.247 band to enable two SAR probe calibration frequency points to cover the bands, including the band gap channels. When band gap channels are supported and the bands are not aggregated for SAR testing, band gap channels must be considered independently in each band according to the normally required OFDM SAR measurement and probe calibration frequency points requirements.

C) OFDM Transmission Mode SAR Test Configuration and Channel Selection Requirements

The initial test configuration for 5 GHz OFDM transmission modes is determined by the 802.11 configuration with the highest maximum output power specified for production units, including tune-up tolerance, in each standalone and aggregated frequency band. SAR for the initial test configuration is measured using the highest maximum output power channel determined by the default power measurement procedures. When multiple configurations in a frequency band have the same specified maximum output power, the initial test configuration is determined according to the following steps applied sequentially.

1) The largest channel bandwidth configuration is selected among the multiple configurations with the same specified maximum output power.

2) If multiple configurations have the same specified maximum output power and largest channel bandwidth, the lowest order modulation among the largest channel bandwidth configurations is selected.

3) If multiple configurations have the same specified maximum output power, largest channel bandwidth and lowest order modulation, the lowest data rate configuration among these configurations is selected.

4) When multiple transmission modes (802.11a/g/n/ac) have the same specified maximum output power, largest channel bandwidth, lowest order modulation and lowest data rate, the lowest order 802.11 mode is selected; i.e., 802.11a is chosen over 802.11n then 802.11ac or 802.11g is chosen over 802.11n. After an initial test configuration is determined, if multiple test channels have the same measured maximum output power, the channel chosen for SAR measurement is determined according to the following. These channel selection procedures apply to both the initial test configuration and subsequent test configuration(s), with respect to the default power measurement procedures or additional power measurements required for further SAR test reduction. The same procedures also apply to subsequent highest output power channel(s) selection.

1) The channel closest to mid-band frequency is selected for SAR measurement.

2) For channels with equal separation from mid-band frequency; for example, high and low channels or two mid-band channels, the higher frequency (number) channel is selected for SAR measurement.

D) SAR Test Requirements for OFDM configurations

When SAR measurement is required for 802.11 a/n/ac OFDM configurations, each standalone and frequency aggregated band is considered separately for SAR test reduction. When the same transmitter and antenna(s) are used for U-NII-1 and U-NII-2A bands, additional SAR test reduction applies. When band gap channels between U-NII-2C band and 5.8 GHz U-NII-3 or §15.247 band are supported, the highest maximum output power transmission mode configuration and maximum output power channel across the bands must be used to determine SAR test reduction, according to the initial test configuration and subsequent test configuration requirements. In applying the initial test configuration and subsequent test configuration procedures, the 802.11 transmission configuration with the highest specified maximum output power and the channel within a test configuration with the highest measured maximum output power should be clearly distinguished to apply the procedures.

9 Detailed Test Results

9.1 Conducted Power measurements

The maximum conducted average power (Unit: dBm) including tune-up tolerance is shown as below.

9.1.1 Conducted Power of GSM850

GSM850(SIM1)		Burst-Averaged output Power (dBm)			Division Factors	Source Based time Average Power(dBm)		
		128CH	190CH	251CH		128CH	190CH	251CH
GSM(CS)		32.58	32.56	32.55	-9.03	23.55	23.53	23.52
GPRS (GMSK)	1 Tx Slot	32.02	32.05	32.04	-9.03	22.99	23.02	23.01
	2 Tx Slots	31.18	31.25	31.34	-6.02	25.16	25.23	25.32
	3 Tx Slots	30.22	30.28	30.27	-4.26	25.96	26.02	26.01
	4 Tx Slots	29.63	29.68	29.70	-3.01	**26.62**	**26.67**	**26.69**
EGPRS (8-PSK)	1 Tx Slot	29.28	29.25	29.35	-9.03	20.25	20.22	20.32
	2 Tx Slots	28.15	28.13	28.12	-6.02	22.13	22.11	22.10
	3 Tx Slots	27.32	27.37	27.32	-4.26	23.06	23.11	23.06
	4 Tx Slots	26.32	26.25	26.34	-3.01	23.31	23.24	23.33

Note: 1) The conducted power of GSM850 is measured with RMS detector.

2) Frame-averaged output power was calculated from the measured burst-averaged output power by converting the slot powers into linear units and calculating the energy over 8 timesolts.

3)The bolded GPRS 4Tx slots mode was selected for SAR testing according the highest Source Based time Average Power table.

4) channel /Frequency: 128/824.2; 190/836.6; 251/848.8

9.1.2 Conducted Power of GSM1900

GSM1900(SIM1)		Burst-Averaged output Power (dBm)			Division Factors	Source Based time Average Power(dBm)		
		512CH	661CH	810CH		512CH	661CH	810CH
GSM(CS)		29.43	29.97	29.87	-9.03	20.40	20.94	20.84
GPRS (GMSK)	1 Tx Slot	28.78	29.32	29.39	-9.03	19.75	20.29	20.36
	2 Tx Slots	28.00	28.52	28.26	-6.02	21.98	22.50	22.24
	3 Tx Slots	27.28	27.39	27.35	-4.26	23.02	23.13	23.09
	4 Tx Slots	26.81	26.76	26.73	-3.01	**23.80**	**23.75**	**23.72**
EGPRS (8-PSK)	1 Tx Slot	28.96	28.94	28.95	-9.03	19.93	19.91	19.92
	2 Tx Slots	27.68	27.63	27.61	-6.02	21.66	21.61	21.59
	3 Tx Slots	26.23	26.28	26.25	-4.26	21.97	22.02	21.99
	4 Tx Slots	25.18	25.15	25.22	-3.01	22.17	22.14	22.21

Note: 1) The conducted power of GSM1900 is measured with RMS detector.

2) Frame-averaged output power was calculated from the measured burst-averaged output power by converting the slot powers into linear units and calculating the energy over 8 timesolts.

3)The bolded GPRS 4Tx slots mode was selected for SAR testing according the highest Source Based time Average Power table.

4) channel /Frequency: 512/1850.2; 661/1880; 810/1909.8

9.1.3 Conducted Power of UMTS Band II

UMTS Band II		Conducted Power (dBm)		
		9262CH	9400CH	9538CH
WCDMA	12.2kbps RMC	22.45	22.33	22.35
HSDPA	Subtest 1	21.51	21.59	21.63
	Subtest 2	21.59	21.60	21.51
	Subtest 3	21.59	21.63	21.56
	Subtest 4	21.72	21.51	21.52
HSUPA	Subtest 1	21.70	21.71	21.73
	Subtest 2	21.66	21.62	21.82
	Subtest 3	21.62	21.75	21.83
	Subtest 4	21.60	21.58	21.62
	Subtest 5	21.62	21.69	21.73

Note: 1) channel /Frequency: 9262/1852.4, 9400/1880, 9538/1907.6

9.1.4 Conducted Power of UMTS Band V

UMTS Band V		Conducted Power (dBm)		
		4132CH	4182CH	4233CH
WCDMA	12.2kbps RMC	21.28	21.32	21.38
HSDPA	Subtest 1	21.13	21.20	21.25
	Subtest 2	21.32	21.20	21.35
	Subtest 3	21.32	21.31	21.23
	Subtest 4	20.57	20.64	20.66
HSUPA	Subtest 1	20.72	20.63	20.51
	Subtest 2	21.22	21.25	21.32
	Subtest 3	21.31	21.32	21.25
	Subtest 4	21.53	21.22	21.20
	Subtest 5	21.12	21.15	21.23

Note: 1) channel /Frequency: 4132/826.4, 4182/836.4, 4233/846.6

9.1.5 Conducted Power of LTE Band VII

Conducted Power of LTE Band VII						
Bandwidth	Modulation	RB size	RB offset	Channel 20775	Channel 21100	Channel 21425
5MHz	QPSK	1	0	20.62	20.54	21.03
			13	20.67	20.68	20.73
			24	20.85	20.86	21.07
		12	0	20.68	20.94	20.97
			6	21.07	21.02	20.88
			13	20.82	20.92	20.85
		25	0	20.85	20.86	20.72
	16QAM	1	0	20.76	20.89	20.84
			13	20.66	20.90	20.96
			24	20.62	20.50	20.89
		12	0	20.91	20.95	20.37
			6	20.87	20.89	20.34
			13	20.80	21.00	20.74
		25	0	20.80	20.68	20.84
Bandwidth	Modulation	RB size	RB offset	Channel 20800	Channel 21100	Channel 21400
10MHz	QPSK	1	0	20.87	20.63	20.92
			25	20.87	20.71	21.03
			49	21.07	20.99	20.91
		25	0	20.81	20.64	20.85
			13	20.89	20.85	20.72
			25	20.93	20.78	20.99
		50	0	21.06	20.83	20.61
	16QAM	1	0	20.65	20.85	20.98
			25	20.60	21.06	20.98
			49	21.02	20.83	20.69
		25	0	20.61	20.94	20.81
			13	20.86	20.85	20.92
			25	20.93	20.98	20.97
		50	0	21.01	20.87	20.88

Conducted Power of LTE Band VII						
Bandwidth	Modulation	RB size	RB offset	Channel 20825	Channel 21100	Channel 21375
15MHz	QPSK	1	0	20.88	20.62	20.92
			38	20.86	20.91	20.82
			74	20.73	20.91	20.83
		36	0	20.96	20.81	20.97
			18	20.61	20.82	20.94
			39	20.73	20.85	20.68
		75	0	20.87	20.93	20.63
	16QAM	1	0	20.73	21.08	20.93
			38	20.76	20.95	21.06
			74	20.79	20.87	21.03
		36	0	20.66	20.85	20.81
			18	20.68	20.82	20.90
			39	20.67	20.61	20.99
		75	0	20.76	20.74	20.65

Conducted Power of LTE Band VII						
Bandwidth	Modulation	RB size	RB offset	Channel 20850	Channel 21100	Channel 21350
20MHz	QPSK	1	0	20.85	20.76	20.96
			50	20.99	20.64	20.95
			99	20.84	**21.09**	20.79
		50	0	20.69	20.84	20.82
			25	20.82	20.75	20.80
			50	20.99	**21.04**	20.62
		100	0	20.64	**20.95**	20.90
	16QAM	1	0	20.84	20.83	20.79
			50	20.97	20.96	20.64
			99	20.92	20.88	20.87
		50	0	20.89	20.87	20.77
			25	20.92	20.79	20.71
			50	20.87	20.99	20.80
		100	0	20.74	20.64	20.87

9.1.6 Conducted Power of LTE Band XLI

Conducted Power of LTE Band XLI						
Bandwidth	Modulation	RB size	RB offset	Channel 39675	Channel 40620	Channel 41565
5MHz	QPSK	1	0	22.58	22.38	22.59
			13	22.21	23.15	22.56
			24	22.08	22.51	23.00
		12	0	22.33	22.47	22.48
			6	22.36	22.52	22.45
			13	22.39	22.62	22.40
		25	0	22.21	22.02	22.21
	16QAM	1	0	22.16	22.27	22.83
			13	22.55	22.73	22.56
			24	22.28	22.36	22.61
		12	0	22.25	22.45	22.33
			6	22.21	22.51	22.35
			13	22.25	22.57	22.35
		25	0	22.26	22.80	22.02
Bandwidth	Modulation	RB size	RB offset	Channel 39700	Channel 40620	Channel 41540
10MHz	QPSK	1	0	22.92	22.87	23.00
			25	22.80	22.93	22.58
			49	22.94	22.97	23.00
		25	0	22.33	22.43	22.52
			13	22.32	22.59	22.43
			25	22.43	22.58	22.42
		50	0	22.20	22.09	22.23
	16QAM	1	0	22.48	22.25	22.73
			25	22.54	22.75	22.56
			49	22.94	22.18	22.98
		25	0	22.24	22.46	22.34
			13	22.20	22.51	22.38
			25	22.31	22.64	22.34
		50	0	22.24	22.14	22.31

Conducted Power of LTE Band XLI						
Bandwidth	Modulation	RB size	RB offset	Channel 39725	Channel 40620	Channel 41515
15MHz	QPSK	1	0	22.33	23.00	22.96
			38	22.65	22.43	22.55
			74	22.36	22.23	22.62
		36	0	22.35	22.46	22.46
			18	22.34	22.52	22.46
			39	22.41	22.61	22.39
		75	0	22.30	22.14	22.25
	16QAM	1	0	22.26	22.99	22.58
			38	22.55	22.78	22.62
			74	22.44	22.87	22.94
		36	0	22.23	22.46	22.36
			18	22.20	22.48	22.32
			39	22.28	22.63	22.37
		75	0	22.27	22.14	22.23
Bandwidth	Modulation	RB size	RB offset	Channel 39750	Channel 40620	Channel 41490
20MHz	QPSK	1	0	22.57	22.31	22.73
			50	22.60	22.05	22.63
			99	22.61	**22.64**	22.92
		50	0	22.24	22.37	22.00
			25	22.30	22.36	22.04
			50	22.20	**22.58**	22.06
		100	0	22.37	**22.69**	22.55
	16QAM	1	0	22.15	22.86	22.94
			50	22.64	22.85	22.68
			99	22.50	22.10	22.92
		50	0	22.35	22.55	22.45
			25	22.32	22.58	22.44
			50	22.36	22.69	22.43
		100	0	22.23	22.22	22.09

Note: 1) channel /Frequency: 39675/2498.5, 39700/2501,39725/2503.5, 39750/2506,40620/2593, 41565/2687.5,41540/2685, 41515/2685.5,41490/2680.

9.1.7 Conducted Power of Wi-Fi 2.4G

Mode	802.11b		
Channel / Frequency (MHz)	1(2412)	6(2437)	11(2462)
Average Power(dBm)	16.39	16.77	16.67
Mode	802.11g		
Channel / Frequency (MHz)	1(2412)	6(2437)	11(2462)
Average Power(dBM)	15.51	15.75	15.55
Mode	802.11n(HT20)		
Channel / Frequency (MHz)	1(2412)	6(2437)	11(2462)
Average Power(dBM)	15.57	15.66	15.47
Mode	802.11n(HT40)		
Channel / Frequency (MHz)	3(2422)	6(2437)	9(2452)
Average Power(dBm)	14.49	14.73	14.45

9.1.8 Conducted Power of BT

The maximum output power of BT is:

Mode	**1Mbps**		
Channel / Frequency (MHz)	0(2402)	39(2441)	78(2480)
Average Power(dBm)	-2.49	-3.09	-3.88
Mode	**2Mbps**		
Channel / Frequency (MHz)	0(2402)	39(2441)	78(2480)
Average Power(dBm)	-1.97	-2.51	-3.27
Mode	**3Mbps**		
Channel / Frequency (MHz)	0(2402)	39(2441)	78(2480)
Average Power(dBm)	-1.58	-2.13	-2.87

9.1.9 Tune-up power tolerance

Band	Tune-up power tolerance(dBm)		
GSM850	GSM/GPRS (GMSK)	GSM	Max output power =32.5dBm±0.5dBm
		1TXslots	Max output power =32.0dBm±0.5dBm
		2TXslots	Max output power =31.0dBm±0.5dBm
		3TXslots	Max output power =30.0dBm±0.5dBm
		4TXslots	Max output power =29.5dBm±0.5dBm
GSM850	EGPRS (8-PSK)	1TXslots	Max output power =29.0dBm±0.5dBm
		2TXslots	Max output power =28.0dBm±0.5dBm
		3TXslots	Max output power =27.0dBm±0.5dBm
		4TXslots	Max output power =26.0dBm±0.5dBm
GSM1900	GSM/GPRS (GMSK)	GSM	Max output power =29.5dBm±0.5dBm
		1TXslots	Max output power =29.0dBm±0.5dBm
		2TXslots	Max output power =28.5dBm±0.5dBm
		3TXslots	Max output power =27.0dBm±0.5dBm
		4TXslots	Max output power =26.5dBm±0.5dBm
GSM1900	EGPRS (8-PSK)	1TXslots	Max output power =28.5dBm±0.5dBm
		2TXslots	Max output power =27.5dBm±0.5dBm
		3TXslots	Max output power =26.0dBm±0.5dBm
		4TXslots	Max output power =25.0dBm±0.5dBm
WCDMA 2	Max output power =21.5dbm±1.0dbm		
WCDMA 5	Max output power =20.5dbm±1.0dbm		
LTE B7	Max output power =20.5dbm±1.0dbm		
LTE B41	Max output power =22.0dbm±1.0dbm		
Wi-Fi	802.11b		Max output power =16.5±1dbm
	802.11g		Max output power =15±1dbm
	802.11n (HT20)		Max output power =15±1dbm
	802.11n (HT40)		Max output power =14±1dbm
BT	1Mbps Power		Max output power =-3.0dBm±1dbm
	2Mbps Power		Max output power =-2.0dBm±1dbm
	3Mbps Power		Max output power =-2.0dBm±1dbm

9.2 SAR test results

Notes:

1) Per KDB447498 D01v05 r02,the SAR test shall be performed at the high, middle and low frequency channels of each operating mode. If the scaled SAR measured at mid-band channel for each test configuration is at least 3.0 dB lower than the SAR limit (< 0.8 W/kg), testing at the high and low channels is optional.

2) Per KDB447498 D01v05r02, testing of other required channels within the operating mode of a frequency band is not required when the reported 1-g or 10-g SAR for the mid-band or highest output power channel is: ≤ 0.8 W/kg or 2.0 W/kg, for 1-g or 10-g respectively, when the transmission band is ≤ 100 MHz. When the maximum output power variation across the required test channels is > ½ dB, instead of the middle channel, the highest output power channel must be used.

3) Per KDB447498 D01v05r02, All measurement SAR result is scaled-up to account for tune-up tolerance is compliant.

4) Per KDB648474 D04v01r02, body-worn accessory testing is typically associated with voice operations. Therefore, GSM voice was evaluated for body-worn with headset SAR.

5)Per KDB248227 D01v01r02, the procedures required to establish specific device operating configurations for testing the SAR of 802.11 a/b/g transmitters.

(1) For Headsets operating next to ear, hotspot mode or mini-tablet configurations, the initial test position procedures were applied. The test position with the highest extrapolated peak SAR will be used as the initial test position. When the reported SAR of initial test position is <= 0.4 W/kg, SAR testing for remaining test positions is not required. Otherwise, SAR is evaluated at the subsequent highest peak SAR positions until the reported SAR result is <= 0.8 W/kg or all test positions are measured.

(2) For WLAN 2.4 GHz, the highest measured maximum output power channel for DSSS was selected for SAR measurement. When the reported SAR is <= 0.8 W/kg, no further SAR testing is required. Otherwise, SAR is evaluated at the next highest measured output power channel. When any reported SAR is > 1.2 W/kg, SAR is required for the third channel. For OFDM modes (802.11g/n), SAR is not required when the highest reported SAR for DSSS is adjusted by the ratio of OFDM to DSSS specified maximum output power and it is <= 1.2 W/kg.

(3) For WLAN 5 GHz, the initial test configuration was selected according to the transmission mode with the highest maximum output power. When the reported SAR of initial test configuration is > 0.8 W/kg, SAR is required for the subsequent highest measured output power channel until the reported SAR result is <= 1.2 W/kg or all required channels are measured. For other transmission modes, SAR is not required when the highest reported SAR for initial test configuration is adjusted by the ratio of

subsequent test configuration to initial test configuration specified maximum output power and it is <= 1.2 W/kg.

6) Per KDB865664 D01v01r04,for each frequency band,repeated SAR measurement is required only when the measured SAR is ≥0.8W/Kg; if the deviation among the repeated measurement is ≤20%,and the measured SAR <1.45W/Kg,only one repeated measurement is required.

7) Per KDB865664 D02v01r01, SAR plot is only required for the highest measured SAR in each exposure configuration, wireless mode and frequency band combination; Plots are also required when the measured SAR is > 1.5 W/kg, or > 7.0 W/kg for occupational exposure. The published RF exposure KDB procedures may require additional plots; for example, to support SAR to peak location separation ratio test exclusion and/or volume scan post-processing(Refer to appendix B for details).

8) Per KDB941225 D06v01r01, the DUT Dimension is bigger than 9 cm x 5 cm, so 10mm is chosen as the test separation distance for Hotspot mode. When the antenna-to-edge distance is greater than 2.5cm,such position does not need to be tested.

9) Per KDB 941225 D01, 3G SAR Measurement Procedures ,The mode tested for SAR is referred to as the primary mode. The equivalent modes considered for SAR test reduction are denoted as secondary modes. Both primary and secondary modes must be in the same frequency band. When the maximum output power and tune-up tolerance specified for production units in a secondary mode is⩽ 1/4 dB higher than the primary mode or when the highest reported SAR of the primary mode is scaled by the ratio of specified maximum output power and tune-up tolerance of secondary to primary mode and the adjusted SAR is ⩽1.2 W/kg, SAR measurement is not required for the secondary mode.

10)Per KDB 941225 D05, SAR Evaluation Considerations for LTE Devices

(1)QPSK with 1 RB and 50% RB allocation

Start with the largest channel bandwidth and measure SAR, using the RB offset and required test channel combination with the highest maximum output power among RB offsets at the upper edge, middle and lower edge of each required test channel. When the reported SAR is ⩽ 0.8 W/kg, testing of the remaining RB offset configurations and required test channels is not required; otherwise, SAR is required for the remaining required test channels and only for the RB offset configuration with the highest output power for that channel. When the reported SAR of a required test channel is > 1.45 W/kg, SAR is required for all three RB offset configurations for that required test channel.

(2)QPSK with 100% RB allocation

SAR is not required when the highest maximum output power for 100% RB allocation is less than the highest maximum output power in 50% and 1 RB allocations and the highest reported SAR for 1 RB and 50% RB allocation are ⩽ 0.8 W/kg. Otherwise, SAR is measured for the highest output power channel; and if the reported SAR is > 1.45 W/kg, the remaining required test channels must also be tested.

(3)Higher order modulations

SAR is required only when the highest maximum output power for the configuration in the higher order modulation is > 1/2 dB higher than the same configuration in QPSK or when the reported SAR for the QPSK configuration is >1.45 W/kg.

(4)Other channel bandwidth

SAR is required when the highest maximum output power of the smaller channel bandwidth is > 1/2 dB higher than the equivalent channel configurations in the largest channel bandwidth configuration or the reported SAR of a configuration for the largest channel bandwidth is > 1.45 W/kg.

9.2.1 Results overview of GSM850

Test Position of Body with 0mm	Test channel /Freq.(MHz)	Test Mode	SAR Value (W/kg)		Power Drift (%)	Conducted Power (dBm)	Tune-up Limit (dBm)	Scaled SAR_{1-g} (W/kg)	Scaling Factor
			1-g	10-g					
Towards Phantom	251/848.8	GPRS 4TS	0.667	0.433	-1.360	29.700	30.000	0.715	1.072
Towards Ground	251/848.8	GPRS 4TS	0.739	0.511	2.240	29.700	30.000	**0.792**	1.072
SAR Results for Hotspot Exposure Condition with 0mm									
Front side	251/848.8	GPRS 4TS	0.688	0.561	1.750	29.700	30.000	0.737	1.072
Rear side	251/848.8	GPRS 4TS	0.720	0.604	-0.030	29.700	30.000	0.771	1.072
Bottom side	251/848.8	GPRS 4TS	0.746	0.485	3.850	29.700	30.000	**0.799**	1.072
Right side	251/848.8	GPRS 4TS	0.492	0.281	2.170	29.700	30.000	0.527	1.072

9.2.2 Results overview of GSM1900

Test Position of Body with 0mm	Test channel /Freq.(MHz)	Test Mode	SAR Value (W/kg)		Power Drift (%)	Conducted Power (dBm)	Tune-up Limit (dBm)	Scaled SAR_{1-g} (W/kg)	Scalig Factor
			1-g	10-g					
Towards Phantom	512/1850.2	GPRS 4TS	0.643	0.353	0.560	26.810	27.000	0.672	1.045
Towards Ground	512/1850.2	GPRS 4TS	0.729	0.539	-4.190	26.810	27.000	**0.762**	1.045
SAR Results for Hotspot Exposure Condition with 0mm									
Front side	512/1850.2	GPRS 4TS	0.670	0.361	2.550	26.810	27.000	0.700	1.045
Rear side	512/1850.2	GPRS 4TS	0.758	0.426	-1.550	26.810	27.000	**0.792**	1.045
Bottom side	512/1850.2	GPRS 4TS	0.389	0.211	1.390	26.810	27.000	0.406	1.045
Right side	512/1850.2	GPRS 4TS	0.287	0.146	1.820	26.810	27.000	0.300	1.045

9.2.3 Results overview of UMTS Band II

Test Position of Body with 0mm	Test channel /Freq.(MHz)	Test Mode	SAR Value (W/kg)		Power Drift (%)	Conducted Power (dBm)	Tune-up Limit (dBm)	Scaled SAR_{1-g} (W/kg)	Scalig Factor
			1-g	10-g					
Towards Phantom	9262/1852.4	RMC	0.329	0.195	-0.500	22.450	22.500	0.333	1.012
Towards Ground	9262/1852.4	RMC	0.735	0.480	2.890	22.450	22.500	**0.744**	1.012
SAR Results for Hotspot Exposure Condition with 0mm									
Front side	9262/1852.4	RMC	0.355	0.188	-0.240	22.450	22.500	0.359	1.012
Rear side	9262/1852.4	RMC	0.764	0.480	3.380	22.450	22.500	0.773	1.012
Bottom side	9262/1852.4	RMC	0.788	0.465	2.190	22.450	22.500	**0.797**	1.012
Right side	9262/1852.4	RMC	0.394	0.210	0.630	22.450	22.500	0.399	1.012

9.2.4 Results overview of UMTS Band V

Test Position of Body with 0mm	Test channel /Freq.(MHz)	Test Mode	SAR Value (W/kg)		Power Drift (%)	Conducted Power (dBm)	Tune-up Limit (dBm)	Scaled SAR_{1-g} (W/kg)	Scalig Factor
			1-g	10-g					
Towards Phantom	4233/846.6	RMC	0.385	0.259	0.430	21.380	21.500	0.396	1.028
Towards Ground	4233/846.6	RMC	0.673	0.399	-0.680	21.360	21.500	**0.695**	1.033
SAR Results for Hotspot Exposure Condition with 0mm									
Front side	4233/846.6	RMC	0.476	0.355	0.410	21.380	21.500	0.489	1.028
Rear side	4233/846.6	RMC	0.773	0.415	-1.600	21.360	21.500	**0.798**	1.033
Bottom side	4233/846.6	RMC	0.560	0.331	1.870	21.380	21.500	0.576	1.028
Right side	4233/846.6	RMC	0.516	0.300	2.160	21.360	21.500	0.533	1.033

9.2.5 Results overview of LTE Band VII

Test Position of Body with 0mm	Test channel /Freq.(MHz)	Test Mode	SAR Value (W/kg)		Power Drift (%)	Conducted Power (dBm)	Tune-up Limit (dBm)	Scaled SAR_{1-g} (W/kg)	Scalig Factor
			1-g	10-g					
Towards Phantom	21100/2535	20M QPSK 1RB#99	0.687	0.394	-0.040	21.090	21.500	0.755	1.099
Towards Ground	21100/2535	20M QPSK 1RB#99	0.722	0.510	-1.160	21.090	21.500	**0.793**	1.099
Towards Phantom	21100/2535	20M QPSK 50RB#50	0.585	0.265	-0.210	21.040	21.500	0.650	1.112
Towards Ground	21100/2535	20M QPSK 50RB#50	0.676	0.480	4.220	21.040	21.500	0.752	1.112
SAR Results for Hotspot Exposure Condition with 0mm									
Front side	21100/2535	20M QPSK 1RB#99	0.106	0.050	-0.820	21.090	21.500	0.116	1.099
Rear side	21100/2535	20M QPSK 1RB#99	0.693	0.355	-0.210	21.090	21.500	**0.762**	1.099
Bottom side	21100/2535	20M QPSK 1RB#99	0.478	0.287	1.630	21.090	21.500	0.525	1.099
Right side	21100/2535	20M QPSK 1RB#99	0.156	0.089	-0.300	21.090	21.500	0.171	1.099
Front side	21100/2535	20M QPSK 50RB#50	0.176	0.099	-2.280	21.040	21.500	0.196	1.112
Rear side	21100/2535	20M QPSK 50RB#50	0.615	0.353	-0.240	21.040	21.500	0.684	1.112
Bottom side	21100/2535	20M QPSK 50RB#50	0.452	0.276	-0.800	21.040	21.500	0.503	1.112
Right side	21100/2535	20M QPSK 50RB#50	0.255	0.129	0.930	21.040	21.500	0.283	1.112

9.2.6 Results overview of LTE Band XLI

Test Position of Body with 0mm	Test channel /Freq.(MHz)	Test Mode	SAR Value (W/kg)		Power Drift (%)	Conducted Power (dBm)	Tune-up Limit (dBm)	Scaled SAR_{1-g} (W/kg)	Scalig Factor
			1-g	10-g					
Towards Phantom	40620/2593	20M QPSK 1RB#99	0.619	0.401	-0.530	22.640	23.000	**0.672**	1.086
Towards Ground	40620/2593	20M QPSK 1RB#99	0.499	0.243	1.730	22.640	23.000	0.542	1.086
Towards Phantom	40620/2593	20M QPSK 50%RB#50	0.602	0.315	-0.580	22.580	23.000	0.663	1.102
Towards Ground	40620/2593	20M QPSK 50%RB#50	0.459	-1.420	-1.420	22.580	23.000	0.506	1.102
SAR Results for Hotspot Exposure Condition with 0mm									
Front side	40620/2593	20M QPSK 1RB#99	0.441	0.218	0.270	22.640	23.000	0.479	1.086
Rear side	40620/2593	20M QPSK 1RB#99	0.459	0.225	-0.710	22.640	23.000	0.499	1.086
Bottom side	40620/2593	20M QPSK 1RB#99	0.563	0.379	-0.770	22.640	23.000	0.612	1.086
Right side	40620/2593	20M QPSK 1RB#99	0.249	0.126	4.720	22.640	23.000	0.271	1.086
Front side	40620/2593	20M QPSK 50%RB#50	0.441	0.218	-0.700	22.580	23.000	0.486	1.102
Rear side	40620/2593	20M QPSK 50%RB#50	0.459	0.226	-0.860	22.580	23.000	0.506	1.102
Bottom side	40620/2593	20M QPSK 50%RB#50	0.560	0.377	-0.480	22.580	23.000	**0.617**	1.102
Right side	40620/2593	20M QPSK 50%RB#50	0.255	0.130	1.650	22.580	23.000	0.281	1.102

9.2.7 Results overview of Wi-Fi 2.4G

Test Position of Body with 0mm	Test channel /Freq.(MHz)	Test Mode	SAR Value (W/kg)		Power Drift (%)	Conducted Power (dBm)	Tune-up Limit (dBm)	Scaled SAR_{1-g} (W/kg)	Scaling Factor
			1-g	10-g					
Towards Phantom	6/2437	802.11b	0.226	0.164	0.000	16.770	17.000	**0.238**	1.054
Towards Ground	6/2437	802.11b	0.202	0.108	2.300	16.770	17.000	0.213	1.054
SAR Results for Hotspot Exposure Condition with 0mm									
Front side	6/2437	802.11b	0.292	0.203	1.900	16.770	17.000	0.308	1.054
Rear side	6/2437	802.11b	0.215	0.191	1.180	16.770	17.000	0.227	1.054
Top side	6/2437	802.11b	0.531	0.322	-1.460	16.770	17.000	**0.560**	1.054
Right side	6/2437	802.11b	0.126	0.105	-3.380	16.770	17.000	0.133	1.054

10 Multiple Transmitter Information

The SAR measurement positions of each side are as below:

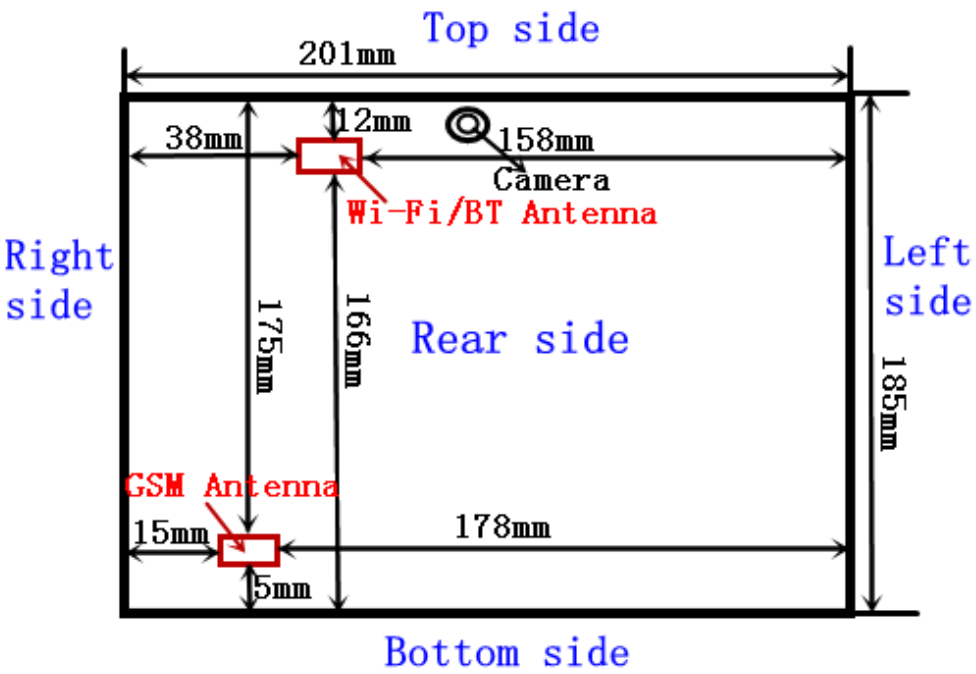

< Rear Side >

Mode	Front side	Rear side	Left side	Right side	Top side	Bottom side
2G/3G/4G Antenna	Yes	Yes	No	Yes	No	Yes
Wi-Fi/BT Antenna	Yes	Yes	No	Yes	Yes	No

10.1.1 Stand-alone SAR test exclusion

The 1-g and 10-g SAR test exclusion thresholds for 100 MHz to 6 GHz at test separation distances ≤ 50 mm are determined by:

[(max. power of channel, including tune-up tolerance, mW)/(min. test separation distance, mm)] · [√f(GHz)] ≤ 3.0 for 1-g SAR and ≤ 7.5 for 10-g extremity SAR,where

• f(GHz) is the RF channel transmit frequency in GHz

• Power and distance are rounded to the nearest mW and mm before calculation

• The result is rounded to one decimal place for comparison

When the minimum test separation distance is < 5 mm, a distance of 5 mm is applied to determine SAR test exclusion.

Body-Worn position

Mode	Pmax(dBm)	Pmax(mW)	Distance(mm)	f(GHz)	Calculation Result	exclusion Threshold	SAR test exclusion
BT	-2	0.63	5.00	2.45	0.20	3.00	Yes

When the standalone SAR test exclusion applies to an antenna that transmits simultaneously with other antennas, the standalone SAR must be estimated according to the following to determine simultaneous transmission SAR test exclusion

(max. power of channel, including tune-up tolerance, mW)/(min. test separation distance, mm)]·[√f(GHz)/x] W/kg for test separation distances ≤ 50 mm, where x = 7.5 for 1-g SAR.

When the minimum test separation distance is < 5 mm, a distance of 5 mm is applied to determine SAR test exclusion.

Mode	Position	Pmax(dBm)	Pmax(mW)	Distance(mm)	f(GHz)	X	Estimated SAR(W/Kg)
BT	Body	-2	0.63	5.00	2.45	7.50	0.026

10.1.2 Simultaneous Transmission Possibilities

The Simultaneous Transmission Possibilities are as below:

Simultaneous Transmission Possibilities				
Simultaneous Tx Combination	Configuration	Head	Body	Hotspot
1	GSM/GPRS/UMTS/LTE +Wi-Fi	NO	YES	YES
2	GSM/GPRS/UMTS/LTE +BT	NO	YES	NO

Note: The device does not support simultaneous BT and Wi-Fi ,because the BT and Wi-Fi share the same antenna and can't transmit simultaneously.

10.1.3 SAR Summation Scenario

Test Position		Scaled SAR_{Max}		$\sum_{1-g}$ SAR	Wi-Fi (5G)	$\sum_{1-g}$ SAR	SPLSP
		GSM850	Wi-Fi (2.4G)				
Body	Towards Phantom	0.715	0.238	0.953	N/A	N/A	NA
	Towards Ground	0.792	0.213	1.005	N/A	N/A	NA
Hotspot	Front Side	0.737	0.308	**1.045**	N/A	N/A	NA
	Rear Side	0.771	0.227	0.998	N/A	N/A	NA
	Bottom Side	0.799	0.000	0.799	N/A	N/A	NA
	Right side	0.527	0.133	0.660	N/A	N/A	NA

Note: Simultaneous Tx Combination of GSM850 and Wi-Fi

Test Position		Scaled SAR_{Max}		$\sum_{1-g}$ SAR	Wi-Fi (5G)	$\sum_{1-g}$ SAR	SPLSP
		GSM1900	Wi-Fi (2.4G)				
Body	Towards Phantom	0.672	0.238	0.910	N/A	N/A	NA
	Towards Ground	0.762	0.213	0.975	N/A	N/A	NA
Hotspot	Front Side	0.700	0.308	1.008	N/A	N/A	NA
	Rear Side	0.792	0.227	**1.019**	N/A	N/A	NA
	Bottom Side	0.406	0.000	0.406	N/A	N/A	NA
	Right side	0.300	0.133	0.433	N/A	N/A	NA

Note: Simultaneous Tx Combination of GSM1900 and Wi-Fi

Test Position		Scaled SAR_{Max}		$\sum_{1-g}$ SAR	Wi-Fi (5G)	$\sum_{1-g}$ SAR	SPLSP
		UMTS Band II	Wi-Fi (2.4G)				
Body	Towards Phantom	0.333	0.238	0.571	N/A	N/A	NA
	Towards Ground	0.744	0.213	0.957	N/A	N/A	NA
Hotspot	Front Side	0.359	0.308	0.667	N/A	N/A	NA
	Rear Side	0.773	0.227	**1.000**	N/A	N/A	NA
	Bottom Side	0.797	0.000	0.797	N/A	N/A	NA
	Right side	0.399	0.133	0.532	N/A	N/A	NA

Note: Simultaneous Tx Combination of UMTS Band II and Wi-Fi

Test Position		Scaled SAR_{Max}		$\sum_{1-g}$ SAR	Wi-Fi (5G)	$\sum_{1-g}$ SAR	SPLSP
		UMTS Band V	Wi-Fi (2.4G)				
Body	Towards Phantom	0.396	0.238	0.571	N/A	N/A	NA
	Towards Ground	0.695	0.213	0.957	N/A	N/A	NA
Hotspot	Front Side	0.489	0.308	0.797	N/A	N/A	NA
	Rear Side	0.798	0.227	1.025	N/A	N/A	NA
	Bottom Side	0.576	0.000	0.576	N/A	N/A	NA
	Right side	0.533	0.133	0.666	N/A	N/A	NA

Note: Simultaneous Tx Combination of UMTS Band V and Wi-Fi

Test Position		Scaled SAR_{Max}		$\sum_{1-g}$ SAR	Wi-Fi (5G)	$\sum_{1-g}$ SAR	SPLSP
		LTE Band VII	Wi-Fi (2.4G)				
Body	Towards Phantom	0.755	0.238	0.993	N/A	N/A	NA
	Towards Ground	0.793	0.213	**1.006**	N/A	N/A	NA
Hotspot	Front Side	0.196	0.308	0.504	N/A	N/A	NA
	Rear Side	0.762	0.227	0.989	N/A	N/A	NA
	Bottom Side	0.525	0.000	0.525	N/A	N/A	NA
	Right side	0.283	0.133	0.416	N/A	N/A	NA

Note: Simultaneous Tx Combination of LTE Band VII and Wi-Fi

Test Position		Scaled SAR_{Max}		$\sum_{1-g}$ SAR	Wi-Fi (5G)	$\sum_{1-g}$ SAR	SPLSP
		LTE Band XLI	Wi-Fi (2.4G)				
Body	Towards Phantom	0.672	0.238	**0.910**	N/A	N/A	NA
	Towards Ground	0.542	0.213	0.755	N/A	N/A	NA
Hotspot	Front Side	0.486	0.308	0.794	N/A	N/A	NA
	Rear Side	0.506	0.227	0.733	N/A	N/A	NA
	Bottom Side	0.617	0.000	0.617	N/A	N/A	NA
	Right side	0.281	0.133	0.414	N/A	N/A	NA

Note: Simultaneous Tx Combination of LTE Band XLI and Wi-Fi

MAX.$\sum SAR_{1g}$ = 1.045W/kg<1.6 W/kg, so the Simultaneous SAR is not required for Wi-Fi and GSM&UMTS&LTE antenna.

Test Position		Scaled SAR_{Max}		$\sum_{1-g}$ SAR	SPLSP
		GSM850	BT		
Body	Towards Phantom	0.715	0.026	0.741	NA
	Towards Ground	0.792	0.026	**0.818**	NA

Note: Simultaneous Tx Combination of GSM850 and BT

Test Position		Scaled SAR_{Max}		$\sum_{1-g}$ SAR	SPLSP
		GSM1900	BT		
Body	Towards Phantom	0.672	0.026	0.698	NA
	Towards Ground	0.762	0.026	**0.788**	NA

Note: Simultaneous Tx Combination of GSM1900 and BT

Test Position		Scaled SAR_{Max}		$\sum_{1-g}$ SAR	SPLSP
		UMTS Band II	BT		
Body	Towards Phantom	0.333	0.026	0.359	NA
	Towards Ground	0.744	0.026	**0.770**	NA

Note: Simultaneous Tx Combination of UMTS Band II and BT

Test Position		Scaled SAR_{Max}		$\sum_{1-g}$ SAR	SPLSP
		UMTS Band V	BT		
Body	Towards Phantom	0.396	0.026	0.422	NA
	Towards Ground	0.695	0.026	**0.721**	NA

Note: Simultaneous Tx Combination of UMTS Band V and BT

Test Position		Scaled SAR_{Max}		$\sum_{1-g}$ SAR	SPLSP
		LTE Band VII	BT		
Body	Towards Phantom	0.755	0.026	0.781	NA
	Towards Ground	0.793	0.026	**0.819**	NA

Note: Simultaneous Tx Combination of LTE Band VII and BT

Test Position		Scaled SAR_{Max}		$\sum_{1-g}$ SAR	SPLSP
		LTE Band XLI	BT		
Body	Towards Phantom	0.672	0.026	**0.698**	NA
	Towards Ground	0.542	0.026	0.568	NA

Note: Simultaneous Tx Combination of LTE Band XLI and BT

MAX.$\sum SAR_{1g}$ = 0.819W/kg<1.6 W/kg, so the Simultaneous SAR is not required for BT and GSM&UMTS&LTE antenna.

11 Measurement uncertainty evaluation

11.1 Measurement uncertainty evaluation for SAR test

The following table includes the uncertainty table of the IEEE 1528. The values are determined by Satimo.The breakdown of the individual uncertainties is as follows:

Measurement Uncertainty evaluation for SAR test								
Uncertainty Component	Tol. (±%)	Prob. Dist.	Div.	C_i (1g)	C_i (10g)	1g U_i (±%)	10g U_i (±%)	V_i
measurement system								
Probe Calibration	5.8	N	1	1	1	5.8	5.8	∞
Axial Isotropy	3.5	R	$\sqrt{3}$	$(1-C_p)^{1/2}$	$(1-C_p)^{1/2}$	1.43	1.43	∞
Hemispherical Isotropy	5.9	R	$\sqrt{3}$	$\sqrt{C_p}$	$\sqrt{C_p}$	2.41	2.41	∞
Boundary Effect	1	R	$\sqrt{3}$	1	1	0.58	0.58	∞
Linearity	4.7	R	$\sqrt{3}$	1	1	2.71	2.71	∞
system Detection Limits	1	R	$\sqrt{3}$	1	1	0.58	0.58	∞
Modulation response	3	N	1	1	1	3.00	3.00	∞
Readout Electronics	0.5	N	1	1	1	0.50	0.50	∞
Response Time	0	R	$\sqrt{3}$	1	1	0.00	0.00	∞
Integration Time	1.4	R	$\sqrt{3}$	1	1	0.81	0.81	∞
RF Ambient Conditions-Noise	3	R	$\sqrt{3}$	1	1	1.73	1.73	∞
RF Ambient Conditions-Reflections	3	R	$\sqrt{3}$	1	1	1.73	1.73	∞
Probe Positioner Mechanical Tolerance	1.4	R	$\sqrt{3}$	1	1	0.81	0.81	∞
Probe positioning with respect to Phantom Shell	1.4	R	$\sqrt{3}$	1	1	0.81	0.81	∞
Extrapolation, interpolation and Integration Algorithms for Max.SAR Evaluation	2.3	R	$\sqrt{3}$	1	1	1.33	1.33	∞
Test sample Related								
Test Sample Positioning	2.6	N	1	1	1	2.60	2.60	11
Device Holder Uncertainty	3	N	1	1	1	3.00	3.00	7
Output Power Variation-SAR drift measurement	5	R	$\sqrt{3}$	1	1	2.89	2.89	∞
SAR scaling	2	R	$\sqrt{3}$	1	1	1.15	1.15	∞
Phantom and Tissue Parameters								
Phantom Uncertainty (shape and thickness tolerances)	4	R	$\sqrt{3}$	1	1	2.31	2.31	∞
Uncertainty in SAR correction for deviation (in permittivity and conductivity)	2	N	1	1	0.84	2.00	1.68	∞
Liquid conductivity（meas.）	2.5	N	1	0.64	0.43	1.60	1.08	5
Liquid conductivity (target.)	5	R	$\sqrt{3}$	0.64	0.43	1.85	1.24	5
Liquid Permittivity（meas.）	2.5	N	1	0.60	0.49	1.50	1.23	∞
Liquid Permittivity (target.)	5	R	$\sqrt{3}$	0.60	0.49	1.73	1.42	∞
Combined Standard Uncertainly		Rss				10.63	10.54	
Expanded Uncertainty{95% CONFIDENCE INTERRVAL}		k				21.26	21.08	

11.2 Measurement uncertainty evaluation for system check

The following table includes the uncertainty table of the IEEE 1528. The values are determined by Satimo.The breakdown of the individual uncertainties is as follows:

Uncertainty For System Performance Check								
Uncertainty Component	Tol. (±%)	Prob. Dist.	Div.	C_i 1g	C_i 10g	1g U_i(±%)	10g U_i (±%)	V_i
measurement system								
Probe Calibration	5.8	N	1	1	1	5.80	5.80	∞
Axial Isotropy	3.5	R	$\sqrt{3}$	$(1-C_p)^{1/2}$	$(1-C_p)^{1/2}$	1.43	1.43	∞
Hemispherical Isotropy	5.9	R	$\sqrt{3}$	$\sqrt{C_p}$	$\sqrt{C_p}$	2.41	2.41	∞
Boundary Effect	1	R	$\sqrt{3}$	1	1	0.58	0.58	∞
Linearity	4.7	R	$\sqrt{3}$	1	1	2.71	2.71	∞
system detection Limits	1	R	$\sqrt{3}$	1	1	0.58	0.58	∞
Modulation response	0	N	1	1	1	0.00	0.00	∞
Readout Electronics	0.5	N	1	1	1	0.50	0.50	∞
Response Time	0	R	$\sqrt{3}$	1	1	0.00	0.00	∞
Integration Time	1.4	R	$\sqrt{3}$	1	1	0.81	0.81	∞
RF ambient Conditions - Noise	3	R	$\sqrt{3}$	1	1	1.73	1.73	∞
RF ambient Conditions – Reflections	3	R	$\sqrt{3}$	1	1	1.73	1.73	∞
Probe positioned Mechanical Tolerance	1.4	R	$\sqrt{3}$	1	1	0.81	0.81	∞
Probe positioning with respect to Phantom Shell	1.4	R	$\sqrt{3}$	1	1	0.81	0.81	∞
Extrapolation, interpolation and integration Algorithms for Max. SAR Evaluation	2.3	R	$\sqrt{3}$	1	1	1.33	1.33	∞
Dipole								
Deviation of experimental source from numerical source	4	N	1	1	1	4.00	4.00	∞
Input power and SAR drift measurement	5	R	$\sqrt{3}$	1	1	2.89	2.89	∞
Dipole axis to liquid Distance	2	R	$\sqrt{3}$	1	1	1.16	1.16	∞
Phantom and Tissue Parameters								
Phantom Uncertainty (shape and thickness tolerances)	4	R	$\sqrt{3}$	1	1	2.31	2.31	∞
Uncertainty in SAR correction for deviation (in permittivity and conductivity)	2	N	1	1	0.84	2.00	1.68	∞
Liquid conductivity（meas.）	2.5	N	1	0.64	0.43	1.60	1.08	5
Liquid conductivity (target.)	5	R	$\sqrt{3}$	0.64	0.43	1.85	1.24	5
Liquid Permittivity（meas.）	2.5	N	1	0.60	0.49	1.50	1.23	∞
Liquid Permittivity (target.)	5	R	$\sqrt{3}$	0.60	0.49	1.73	1.41	∞
Combined Standard Uncertainty		Rss				10.28	9.98	
Expanded Uncertainty (95% Confidence interval)		k				20.57	19.95	

12 Test equipment and ancillaries used for tests

To simplify the identification of the test equipment and/or ancillaries which were used, the reporting of the relevant test cases only refer to the test item number as specified in the table below.

	Manufacturer	Device Type	Type(Model)	Serial number	calibration	
					Last Cal.	Due Date
☒	SATIMO	COMOSAR DOSIMETRIC E FIELD PROBE	SSE5	SN 07/15 EP252	2016-07-25	2017-07-24
☒	SATIMO	COMOSAR DOSIMETRIC E FIELD PROBE	SSE2	SN 08/16 EPGO292	2016-12-09	2017-12-08
☐	SATIMO	COMOSAR 750 MHz REFERENCE DIPOLE	SID750	SN 14/13 DIP 0G750-234	2016-07-25	2017-07-24
☒	SATIMO	COMOSAR 835 MHz REFERENCE DIPOLE	SID835	SN 14/13 DIP0G835-235	2016-07-25	2017-07-24
☐	SATIMO	COMOSAR 900 MHz REFERENCE DIPOLE	SID900	SN 14/13 DIP0G900-231	2016-07-25	2017-07-24
☐	SATIMO	COMOSAR 1800 MHz REFERENCE DIPOLE	SID1800	SN 14/13 DIP1G800-232	2016-07-25	2017-07-24
☒	SATIMO	COMOSAR 1900 MHz REFERENCE DIPOLE	SID1900	SN 14/13 DIP1G900-236	2016-07-25	2017-07-24
☐	SATIMO	COMOSAR 2000 MHz REFERENCE DIPOLE	SID2000	SN 14/13 DIP2G000-237	2016-07-25	2017-07-24
☒	SATIMO	COMOSAR 2450 MHz REFERENCE DIPOLE	SID2450	SN 14/13 DIP2G450-238	2016-07-25	2017-07-24
☒	SATIMO	COMOSAR 2600 MHz REFERENCE DIPOLE	SID2600	SN 28/14 DIP2G600-327	2016-07-25	2017-07-24
☒	SATIMO	Software	OPENSAR	N/A	N/A	N/A
☒	SATIMO	Phantom	COMOSAR IEEE SAM PHANTOM	SN 14/13 SAM99	N/A	N/A
☒	R & S	Universal Radio Communication Tester	CMU 200	117528	2016-08-19	2017-08-18
☒	HP	Network Analyser	8753D	3410A08889	2016-08-19	2017-08-18
☒	HP	Signal Generator	E4421B	GB39340770	2016-08-19	2017-08-18
☒	Keithley	Multimeter	Keithley 2000	4014539	2016-08-19	2017-08-18
☒	SATIMO	Amplifier	Power Amplifier	MODU-023-A-0004	2016-10-13	2017-10-12
☒	Agilent	Power Meter	E4418B	GB43312909	2016-10-13	2017-10-12
☒	Agilent	Power Meter Sensor	E4412A	MY41500046	2016-10-13	2017-10-12
☒	Agilent	Power Meter	E4417A	GB41291826	2016-10-13	2017-10-12
☒	Agilent	Power Meter Sensor	8481H	MY41091215	2016-10-13	2017-10-12
☒	SATIMO	DAE	SUPR72	SN 42/13	2016-07-25	2017-07-24

Annex A: System performance verification

(**Please See the SAR Measurement Plots of annex A.**)

Annex B: Measurement results

(**Please See the SAR Measurement Plots of annex B.**)

Annex C: Calibration reports

(Please See the Calibration reports of annex C.)

Annex D: Photo documentation

Photo 1: Measurement System OPENSAR	Photo 2: Front view
	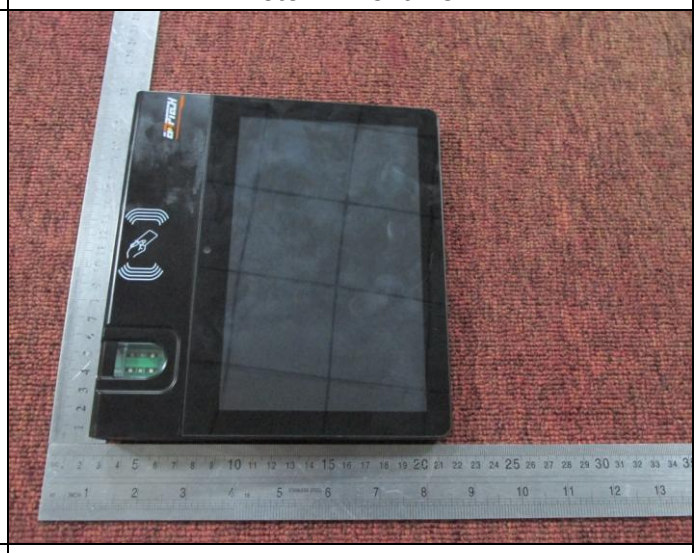
Photo 3: Rear View	Photo 4: Towards Phantom 0mm
	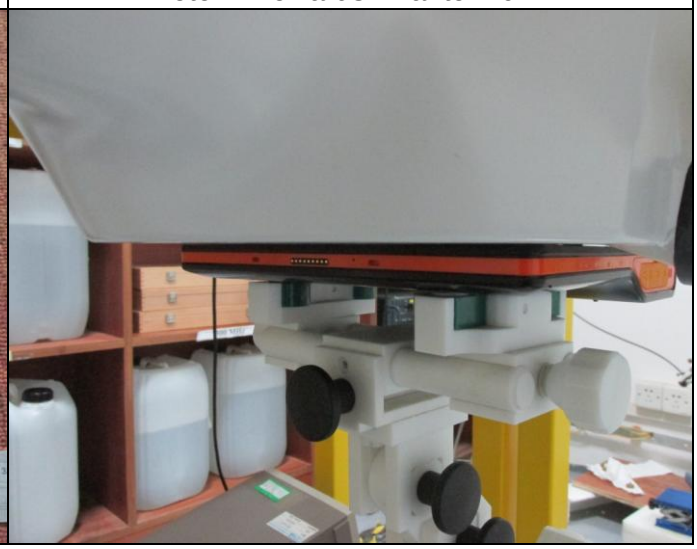

Photo 5: Towards Ground 0mm	Photo 6: Right Side 0mm
Photo 7: Left Side 0mm	Photo 8: Top Side 0mm

Photo 9: Bottom Side 0mm	Photo 10: 850MHz Liquid Depth ⩾ 15.0cm
	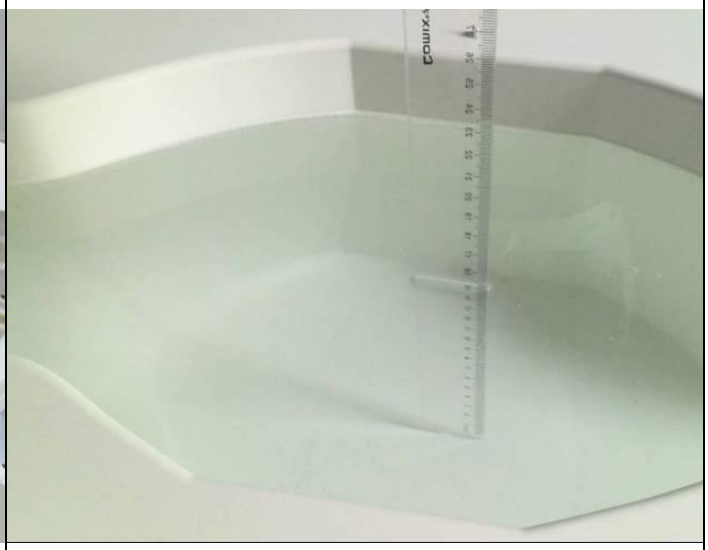
Photo 11: 1800~1900MHz Liquid Depth ⩾ 15.0cm	Photo 12: 2450MHz Liquid Depth ⩾ 15.0cm