permobil

Installation instruction

Contents

Installation 3
Installation F3/F5/M3/M5 4
Installation M300/M400 15
Software update 23
Nominal ConnectMe LED behavior 24
Tools needed for software update 25

Edition: 1, 2017-01
Order no: 332766

Installation

The ConnectMe must be installed by an authorized service technician. If ConnectMe is wrongfully installed it can cause damage to the ConnectMe, the wheelchair and/or other property.

1.
Switch the main fuse to OFF position.

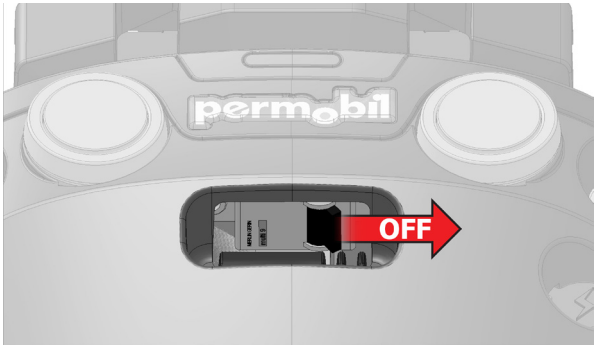

2.
Remove the two knobs holding the top chassis covers.

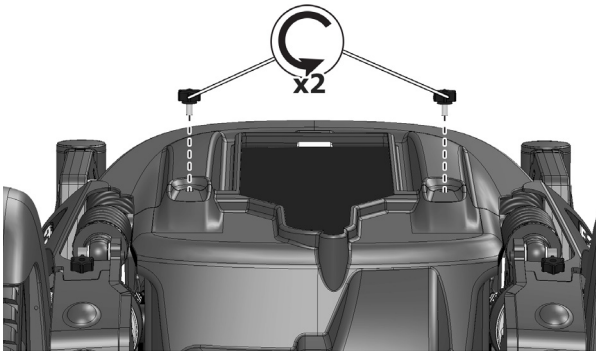

3.
Remove the top cover.

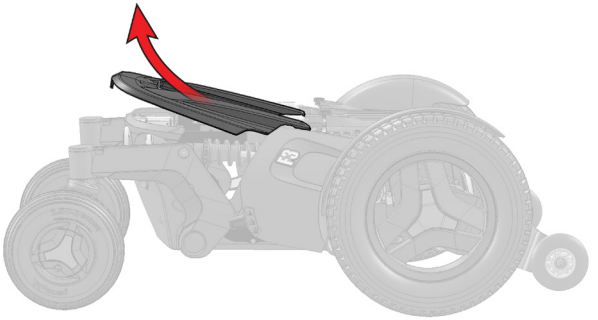

4.
Pull the rear chassis cover backwars to remove it.

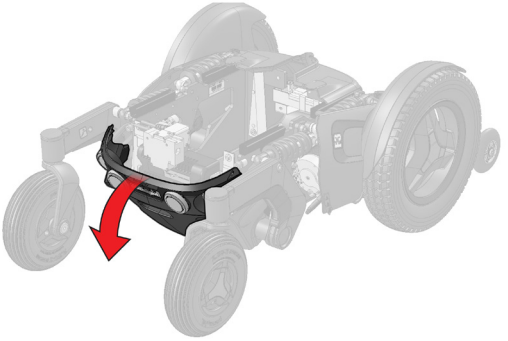

5.
Pull the front chassis cover forward to remove it.

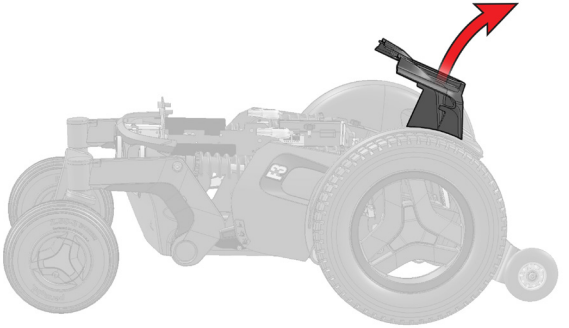

6.
Locate the ICS Master Module in the front of the chassis.

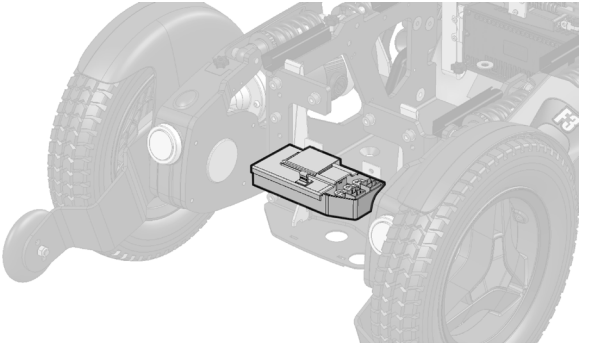

7.
Remove the plastic plug covering J6 connector. Recycle the plug.

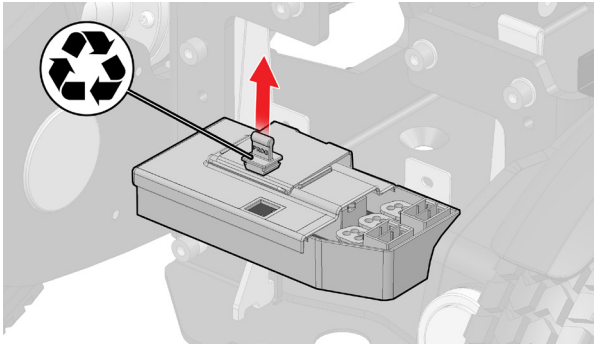

8.
Locate the J6 serial channel (PC) and the R-net connector 3 on the ICS box.

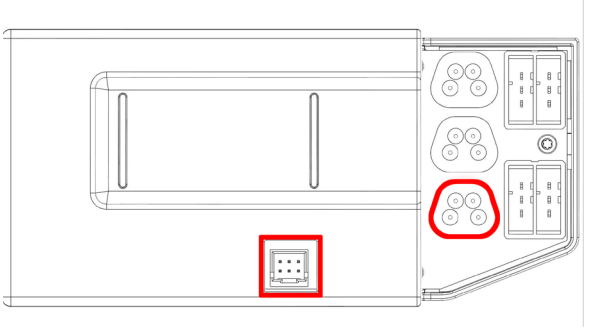

9.
Connect the ConnectMe R-net cable to the connector marked with ”3” in the illustration.

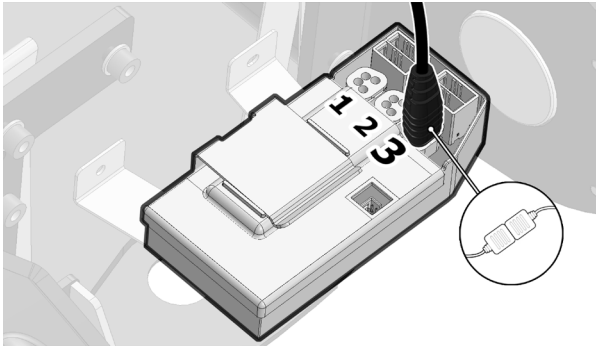

10.
Connect the ConnectMe ICS cable to the J6 connector.

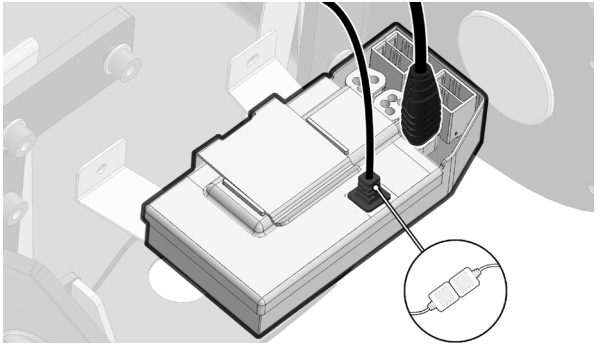

11.
Push the cable box down between the ICS module and the chassis according to the illustration.

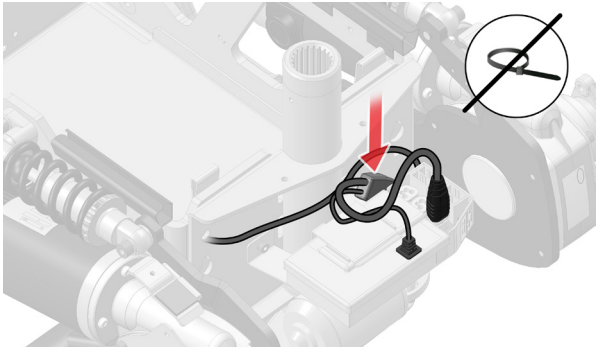

12.
Route the cable backwards on the right side of the chair. Push the cable down in the two cable guides.

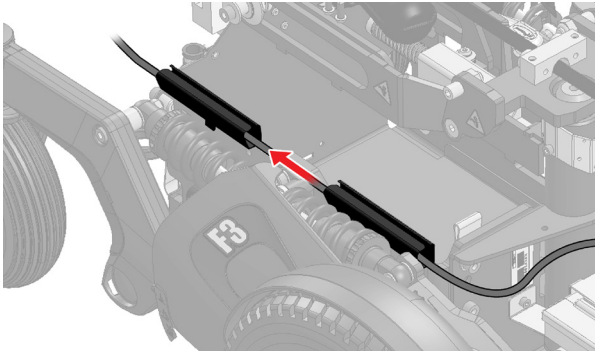

13.
Remove the plastic film covering the Dula lock. Mount it on the ConnectMe box.

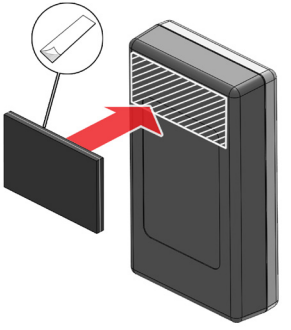

14.
Remove the plastic film covering the other side of the Dula lock. Push the EPDM rubber againts the adhesive to fix it.

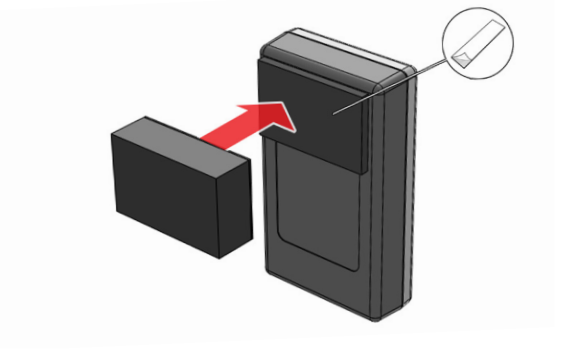

15.
Remove the plastic film covering the EPDM rubber.

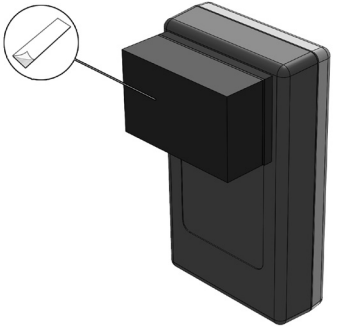

16.
Clean the area shown in the illustration.

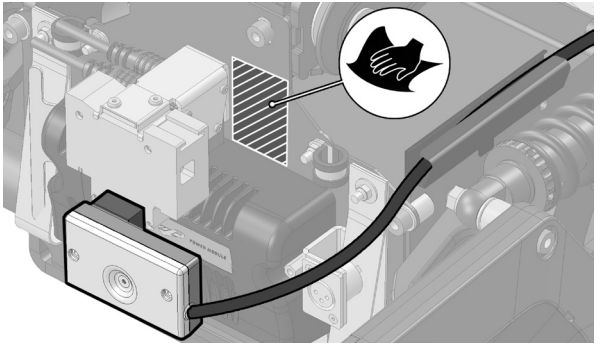

17.
Fix ConnectMe on the battery wall according to the illustration.

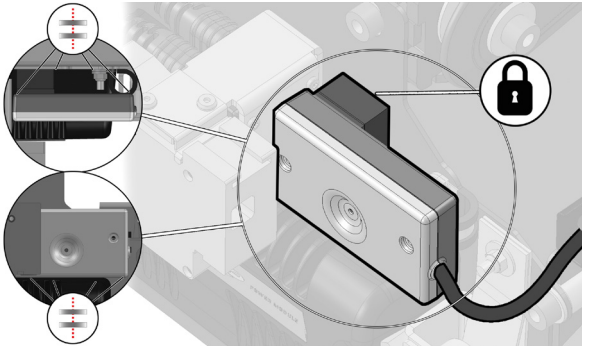

18.
Mount rear cover.

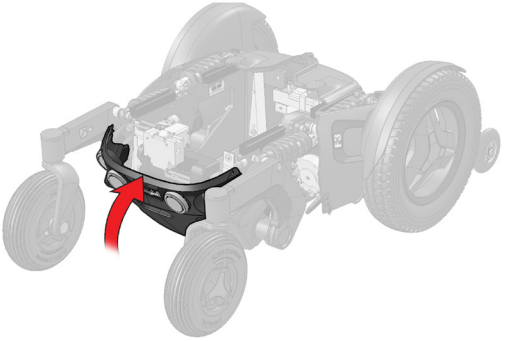

19.
Mount top cover.

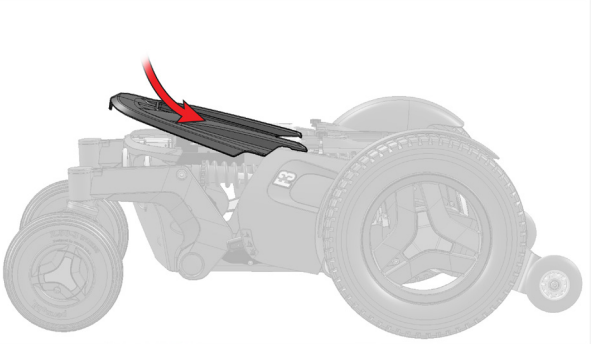

20.
Mount front cover.

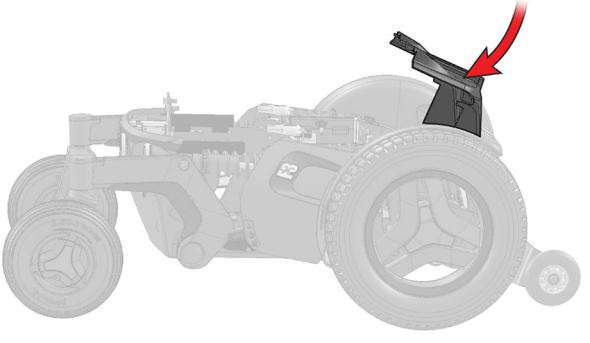

21.
Fix the covers with the knobs.

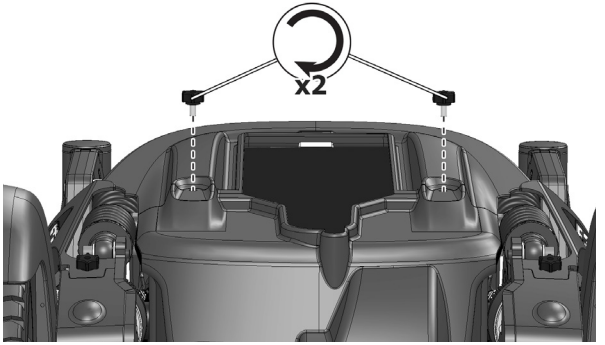

22.
Turn the main fuse to ON position.

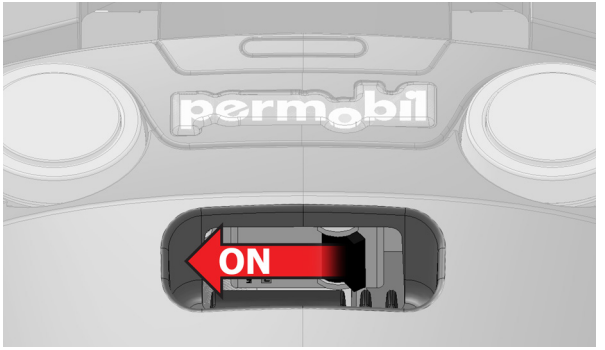

1.
Switch off the main fuse. It is located below the rear lights on the chassis.

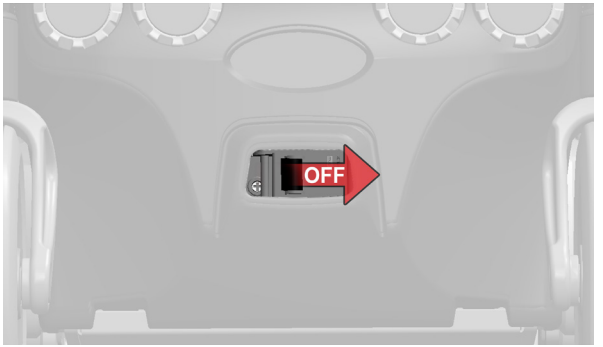

2.
Remove the two knobs holding the chassis front cover.

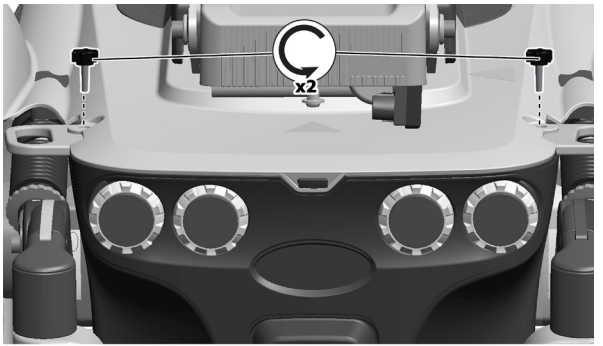

3.
Remove the rear chassis cover by lifting it upwards and backwards. On wheelchairs equipped with lights, disconnect the rear lights cabling.

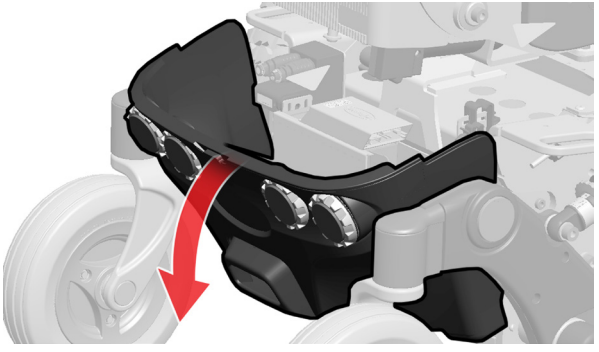

4.
The ICS Master Module is located behind the rear chassis cover.

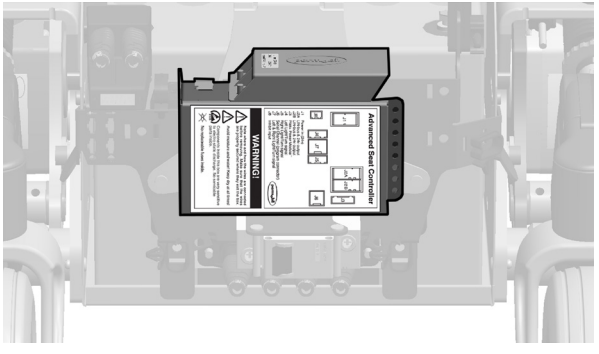

5.
Remove the cover of the ICS Master Module by sliding it off.

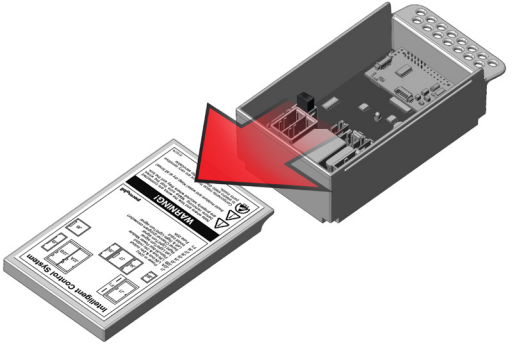

6.
On the cover of the ICS Master Module there is connection overview. Plug in the ConnectMe ICS connector in connection J3.

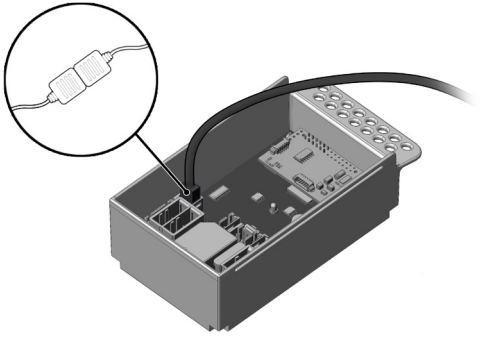

7.
Hold the cable according to the picture and slide the cover of the ICS Master Module back in place.

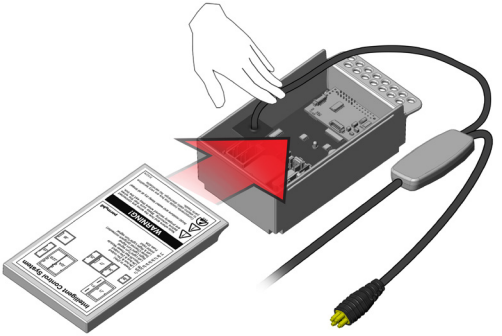

8.
Connect the R-net cable in the R-net bay underneath the fuse.

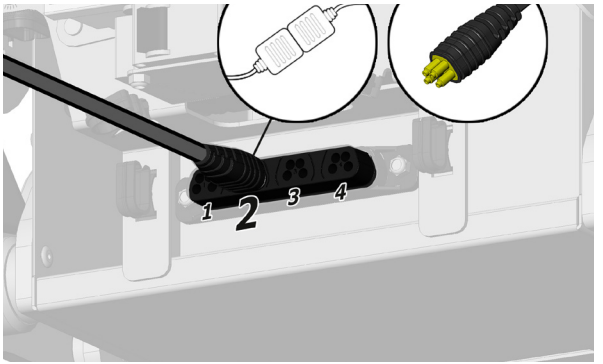

9.
Clean the area under the fuse and mount the Dula lock on it.

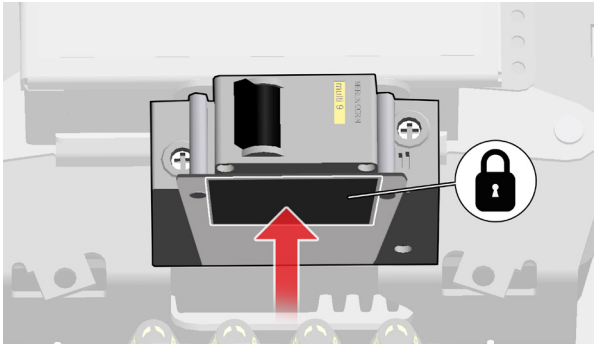

10.
Fix ConnectMe to the main fuse with the cables to the right.

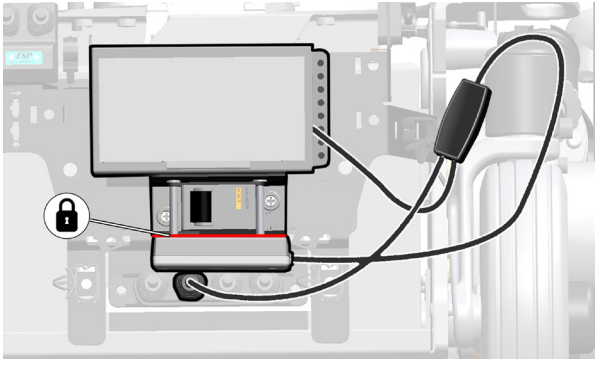

11.
Route the cable according to the illustration.

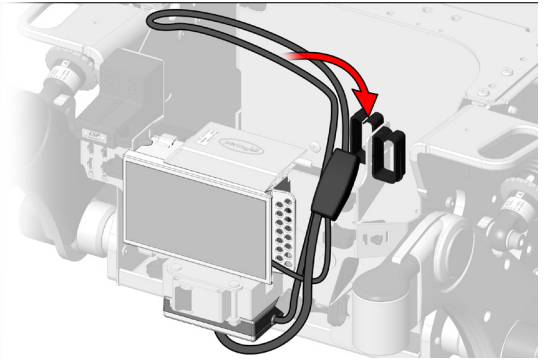

12.
Route the cable according to the illustration.

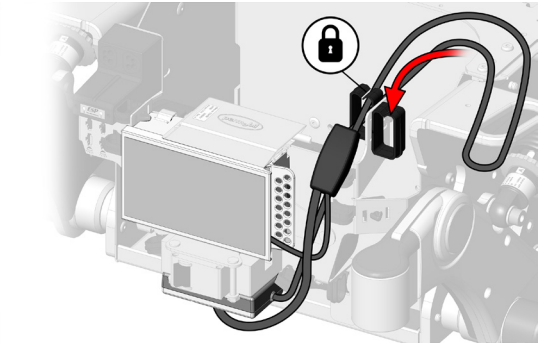

13.
Route the cable according to the illustration.

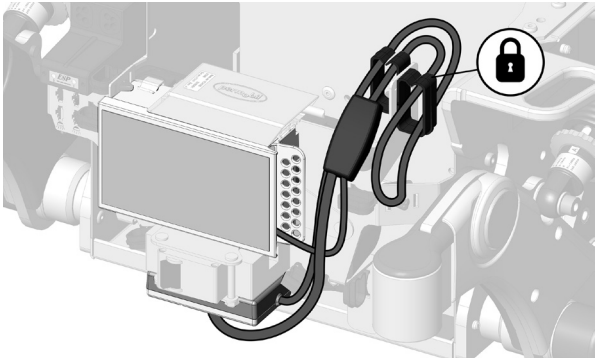

14.
Mount the rear cover.

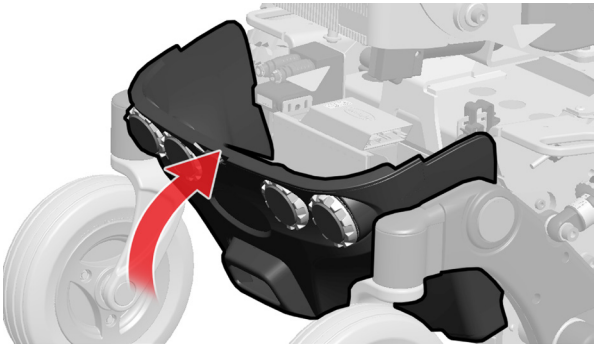

15.
Mount the two knobs holding the top chassis covers.

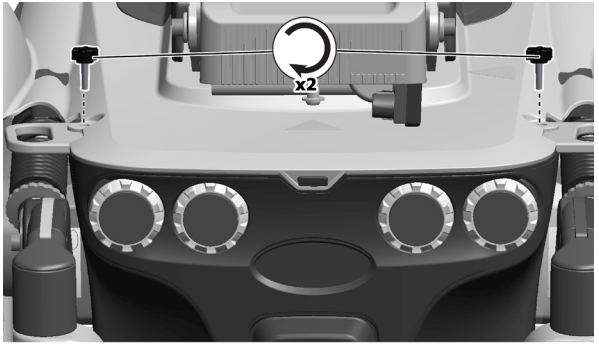

16.
Switch the maine fuse to ON position.

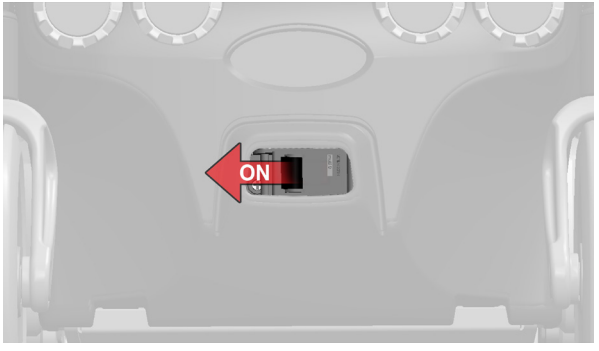

Software update

Your wheelchair may need to be updated to support ConnectMe. Please contact your authorized Permobil technician to complete any update.

Performing a software upgrade on wheelchair already in field will require dedicated tools and needs to be done by Permobil authorized service. The wheelchair needs to be programmed with the correct firmware and a ConnectMe configuration in order to work properly.

If ConnectMe emits a steady red light when connected or any other error code, there's an error with the installation or product. If that's the case, please contact customer

Nominal ConnectMe LED behavior

If the installed wheelchair software supports ConnectMe its LED will:

1. After installation at first start-up of wheelchair go purple.
2. After establishing a connection to the cellular network go green. ***Note!*** *This can take some time, between 1-5 minutes depending on cellular coverage. If no 2G or 3G cellular coverage exist at all, perform this step at another location with cellular coverage.*
3. Go blue if a *Bluetooth*® connection is established.
4. Remain green or blue without any red colors showing when wheelchair is kept ON.

If step 1-4 is proceeded successfully ConnectMe device is correctly installed and wheelchair software do not need to be updated.

If step 2 or 4 fails. The software needs to be updated.
If step any of step 1-4 fails after software update, please contact technical support for troubleshooting assistance.

Tools needed for software update

- Permobil Updater in order to get the latest software and tools with manuals
- ICS programming cable
- RNET dongle

How to perform an update:

1. Make sure Permobil updater is updated.
2. Program the ICS with the latest software using WheelchairBuilderX (X is 4 or later).
3. Program the chassie number of the wheelchair into the ICS using WheelchairBuilderX (X is 4 or later)
4. Make sure the ICS serial number is programmed.
5. Program the URIB with the latest software using the UribUpgradeTool.
6. After software update check ConnectMe LED behavior again according to *"Nominal ConnectMe LED behavior"* on page 24.

ConnectMe

The ConnectMe devices uses the Internet, cellular capabilities, *Bluetooth®*, and GPS to allow data to safely move between the device, wheelchair and other *Bluetooth®* devices.

permobil

CONNECTME170119