G161957137

Meas Type	Emission 10m
Equipment under Test	
Manufacturer	
OP Condition	
Operator	Bertezzolo 161957137
Test Spec	

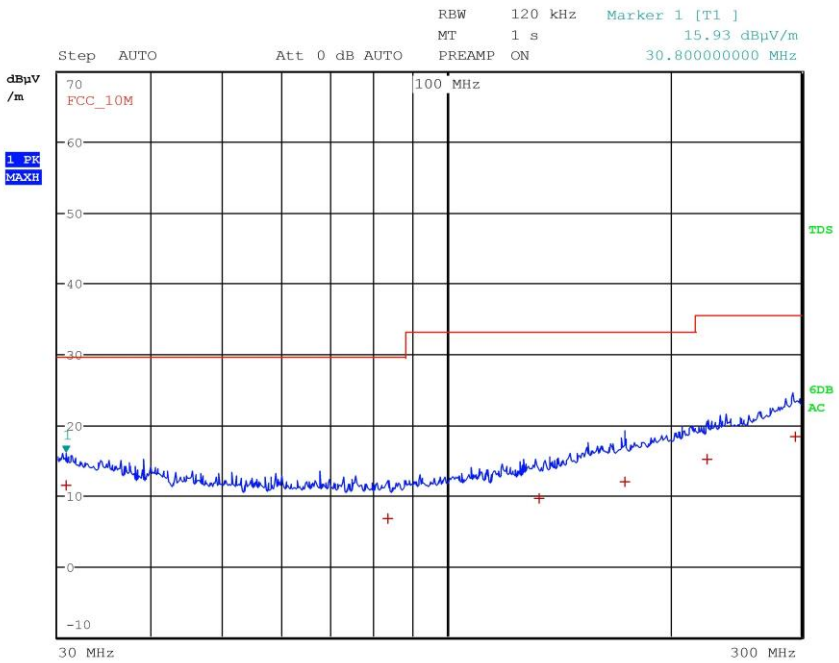

Final Measurement

Meas Time:	1 s
Margin:	6 dB
Subranges:	6

Trace	Frequency	Level (dBµV/m)	Detector	Delta Limit/dB
1	30.800000000 MHz	11.37	Quasi Peak	-18.17
1	83.280000000 MHz	6.78	Quasi Peak	-22.76
1	133.040000000 MHz	9.58	Quasi Peak	-23.48
1	173.400000000 MHz	11.99	Quasi Peak	-21.07
1	224.000000000 MHz	15.21	Quasi Peak	-20.35
1	294.440000000 MHz	18.38	Quasi Peak	-17.18

CMC Centro Misure Compatibilità S.r.l.

G161957138

Meas Type	Emission 10m
Equipment under Test	
Manufacturer	
OP Condition	
Operator	Bertezzolo 161957138
Test Spec	

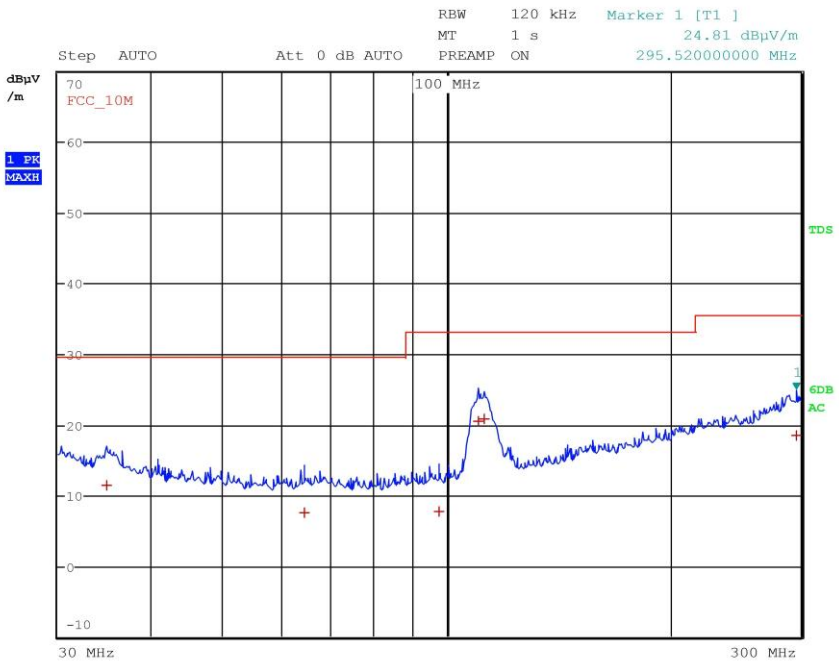

Final Measurement

Meas Time: 1 s
Margin: 6 dB
Subranges: 6

Trace	Frequency	Level (dBµV/m)	Detector	Delta Limit/dB
1	34.920000000 MHz	11.50	Quasi Peak	-18.04
1	64.320000000 MHz	7.60	Quasi Peak	-21.94
1	97.720000000 MHz	7.66	Quasi Peak	-25.40
1	110.280000000 MHz	20.43	Quasi Peak	-12.63
1	112.360000000 MHz	20.87	Quasi Peak	-12.19
1	295.520000000 MHz	18.53	Quasi Peak	-17.03

CMC Centro Misure Compatibilità S.r.l.

G161957139

Meas Type	Emission 10m
Equipment under Test	
Manufacturer	
OP Condition	
Operator	Bertezzolo 161957139
Test Spec	

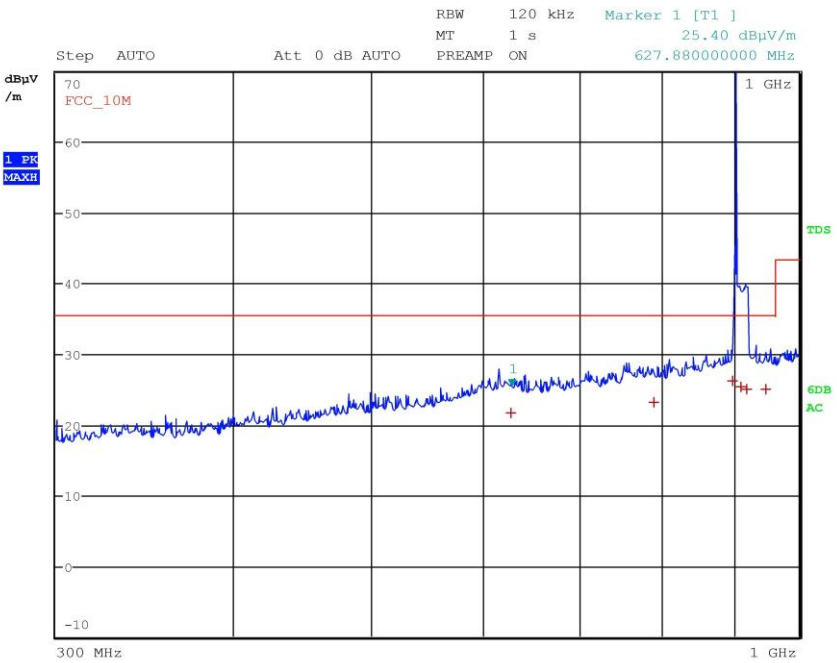

Final Measurement

Meas Time: 1 s
Margin: 6 dB
Subranges: 6

Trace	Frequency	Level (dBµV/m)	Detector	Delta Limit/dB
1	626.640000000 MHz	21.66	Quasi Peak	-13.90
1	789.280000000 MHz	23.16	Quasi Peak	-12.40
1	897.920000000 MHz	26.26	Quasi Peak	-9.30
1	908.520000000 MHz	25.33	Quasi Peak	-10.23
1	918.720000000 MHz	25.07	Quasi Peak	-10.49
1	946.600000000 MHz	24.99	Quasi Peak	-10.57

CMC Centro Misure Compatibilità S.r.l.

G161957140

Meas Type	Emission 10m
Equipment under Test	
Manufacturer	
OP Condition	
Operator	Bertezzolo 161957140
Test Spec	

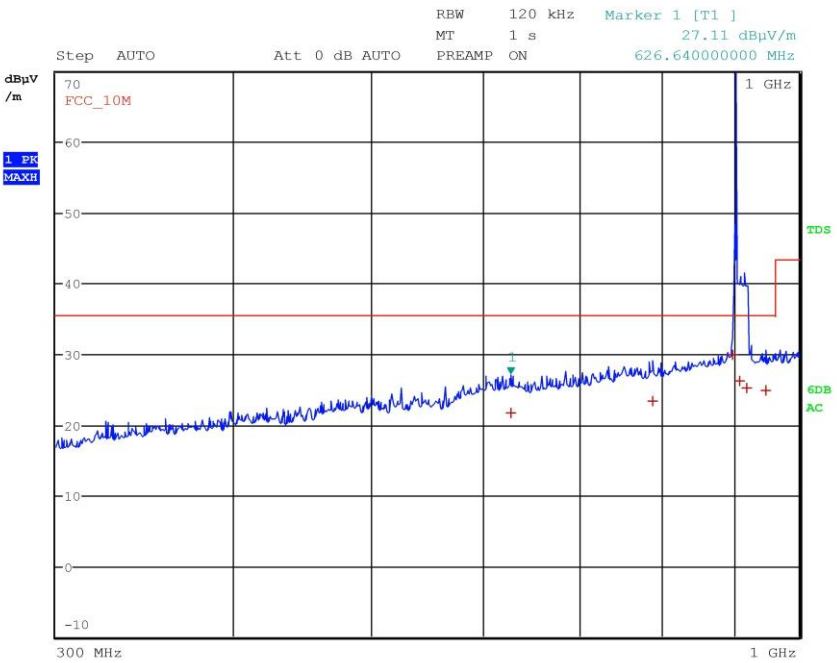

Final Measurement

Meas Time: 1 s
Margin: 6 dB
Subranges: 6

Trace	Frequency	Level (dBµV/m)	Detector	Delta Limit/dB
1	626.640000000 MHz	21.60	Quasi Peak	-13.96
1	789.280000000 MHz	23.42	Quasi Peak	-12.14
1	897.920000000 MHz	29.93	Quasi Peak	-5.63
1	908.520000000 MHz	26.19	Quasi Peak	-9.37
1	918.720000000 MHz	25.22	Quasi Peak	-10.34
1	946.600000000 MHz	24.89	Quasi Peak	-10.67

CMC Centro Misure Compatibilità S.r.l.

G161957141

Meas Type	Emission 10m
Equipment under Test	
Manufacturer	
OP Condition	
Operator	Bertezzolo 161957141
Test Spec	

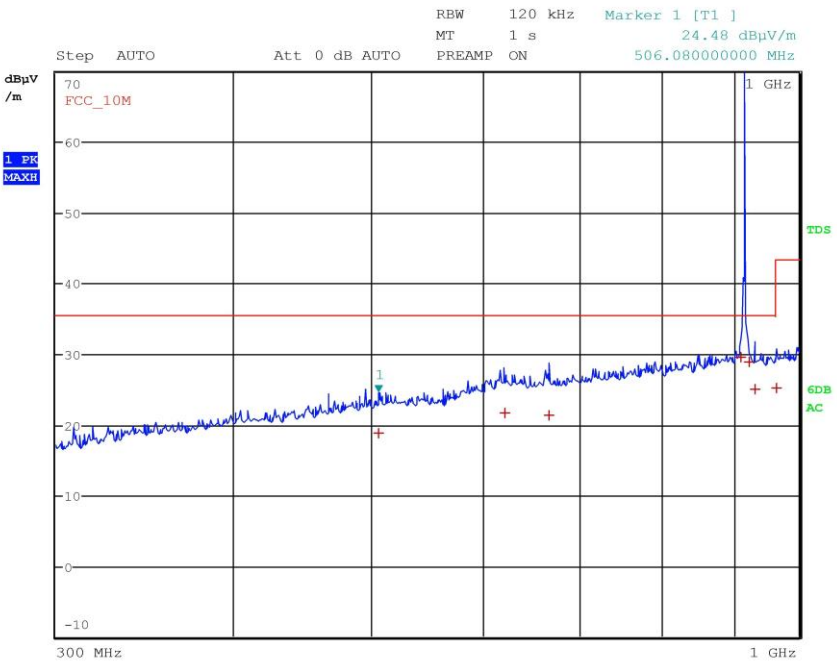

Final Measurement

Meas Time: 1 s
Margin: 6 dB
Subranges: 7

Trace	Frequency	Level (dBµV/m)	Detector	Delta Limit/dB
1	506.080000000 MHz	18.88	Quasi Peak	-16.68
1	621.240000000 MHz	21.65	Quasi Peak	-13.91
1	666.520000000 MHz	21.42	Quasi Peak	-14.14
1	909.520000000 MHz	29.66	Quasi Peak	-5.90
1	921.240000000 MHz	28.91	Quasi Peak	-6.65
1	930.840000000 MHz	24.98	Quasi Peak	-10.58
1	964.440000000 MHz	25.28	Quasi Peak	-18.24

CMC Centro Misure Compatibilità S.r.l.

G161957142

Meas Type	Emission 10m
Equipment under Test	
Manufacturer	
OP Condition	
Operator	Bertezzolo 161957142
Test Spec	

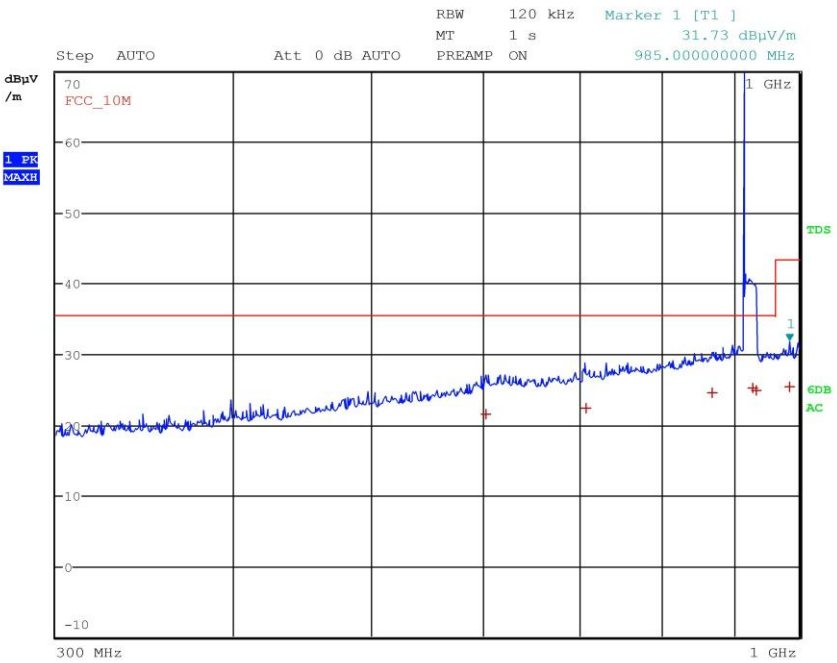

Final Measurement

Meas Time: 1 s
Margin: 6 dB
Subranges: 6

Trace	Frequency	Level (dBµV/m)	Detector	Delta Limit/dB
1	602.080000000 MHz	21.49	Quasi Peak	-14.07
1	707.720000000 MHz	22.30	Quasi Peak	-13.26
1	869.360000000 MHz	24.47	Quasi Peak	-11.09
1	927.040000000 MHz	25.16	Quasi Peak	-10.40
1	932.520000000 MHz	24.92	Quasi Peak	-10.64
1	985.000000000 MHz	25.45	Quasi Peak	-18.07

CMC Centro Misure Compatibilità S.r.l.

G161957143

Meas Type	Emission 10m
Equipment under Test	
Manufacturer	
OP Condition	
Operator	Bertezzolo 161957143
Test Spec	

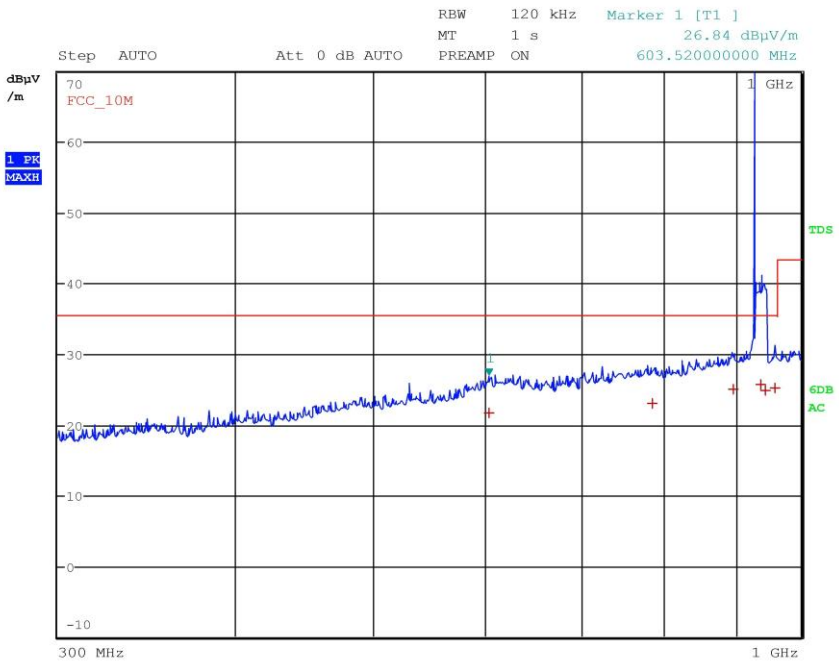

Final Measurement

Meas Time:	1 s
Margin:	6 dB
Subranges:	6

Trace	Frequency	Level (dBµV/m)	Detector	Delta Limit/dB
1	603.520000000 MHz	21.64	Quasi Peak	-13.92
1	786.320000000 MHz	23.11	Quasi Peak	-12.45
1	895.880000000 MHz	25.03	Quasi Peak	-10.53
1	935.600000000 MHz	25.71	Quasi Peak	-9.85
1	943.960000000 MHz	24.92	Quasi Peak	-10.64
1	957.560000000 MHz	25.13	Quasi Peak	-10.43

CMC Centro Misure Compatibilità S.r.l.

G161957144

Meas Type	Emission 10m
Equipment under Test	
Manufacturer	
OP Condition	
Operator	Bertezzolo 161957144
Test Spec	

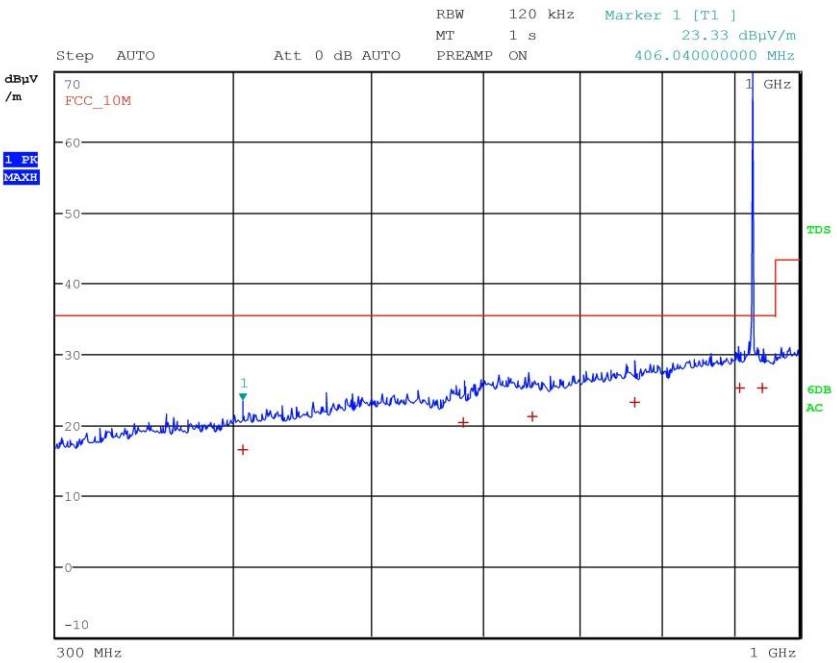

Final Measurement

Meas Time: 1 s
Margin: 6 dB
Subranges: 6

Trace	Frequency	Level (dBµV/m)	Detector	Delta Limit/dB
1	406.040000000 MHz	16.52	Quasi Peak	-19.04
1	580.400000000 MHz	20.26	Quasi Peak	-15.30
1	649.040000000 MHz	21.19	Quasi Peak	-14.37
1	765.680000000 MHz	23.19	Quasi Peak	-12.37
1	908.080000000 MHz	25.17	Quasi Peak	-10.39
1	942.560000000 MHz	25.23	Quasi Peak	-10.33

CMC Centro Misure Compatibilità S.r.l.

G161957145

Meas Type	Emission 10m
Equipment under Test	
Manufacturer	
OP Condition	
Operator	Bertezzolo 161957145
Test Spec	

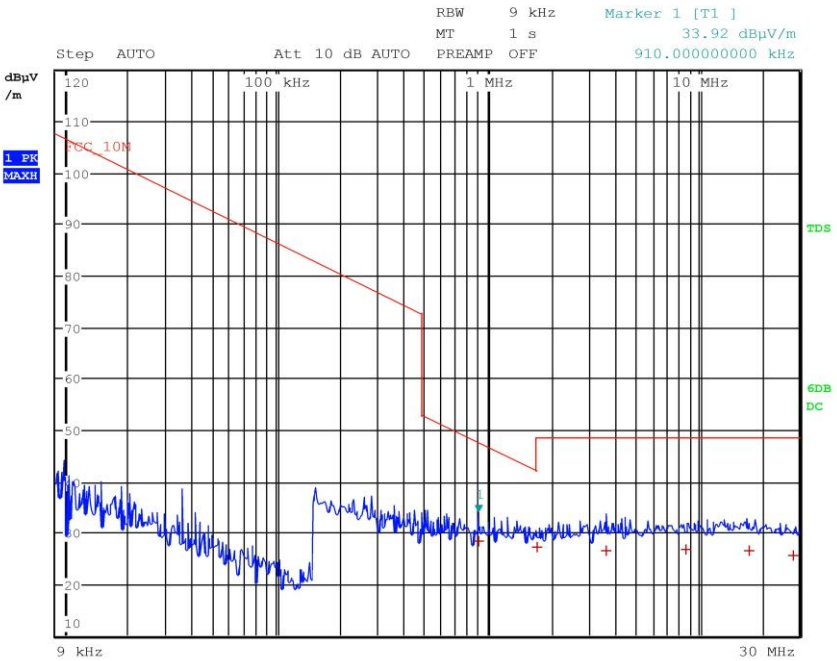

Final Measurement

Meas Time: 1 s
Margin: 6 dB
Subranges: 6

Trace	Frequency	Level (dBµV/m)	Detector	Delta Limit/dB
1	910.000000000 kHz	28.33	Quasi Peak	-19.17
1	1.714000000 MHz	27.19	Quasi Peak	-21.44
1	3.630000000 MHz	26.63	Quasi Peak	-22.00
1	8.734000000 MHz	26.68	Quasi Peak	-21.95
1	17.418000000 MHz	26.55	Quasi Peak	-22.08
1	27.946000000 MHz	25.54	Quasi Peak	-23.09

Result: The requirements are met

CMC Centro Misure Compatibilità S.r.l.

11.4 20 dB bandwidth

Test set-up and execution

- FCC Rules and Regulation; Titles 47 Part 15.247
- DA 00-705
- Internal procedure PM001
- See clause 4 of this test report

Test configuration and test method

Test site:
Laboratory

Auxiliary equipment:
See clause 4 of this test report

EUT exercising

See clause 4 of this test report

Test equipment used

CMC S108, CMC S136, CMC S227
Measurement uncertainty: See clause 7 of this test report

Test specification

See FCC Part 15.247

Environmental conditions

Temperature (°C)	*Atmospheric pressure (kPa)*	*Relative humidity (%)*
22	100	45

Acceptance limits: The maximum allowed 20 dB bandwidth of the hopping channel is 500 kHz

CMC Centro Misure Compatibilità S.r.l.

Setup

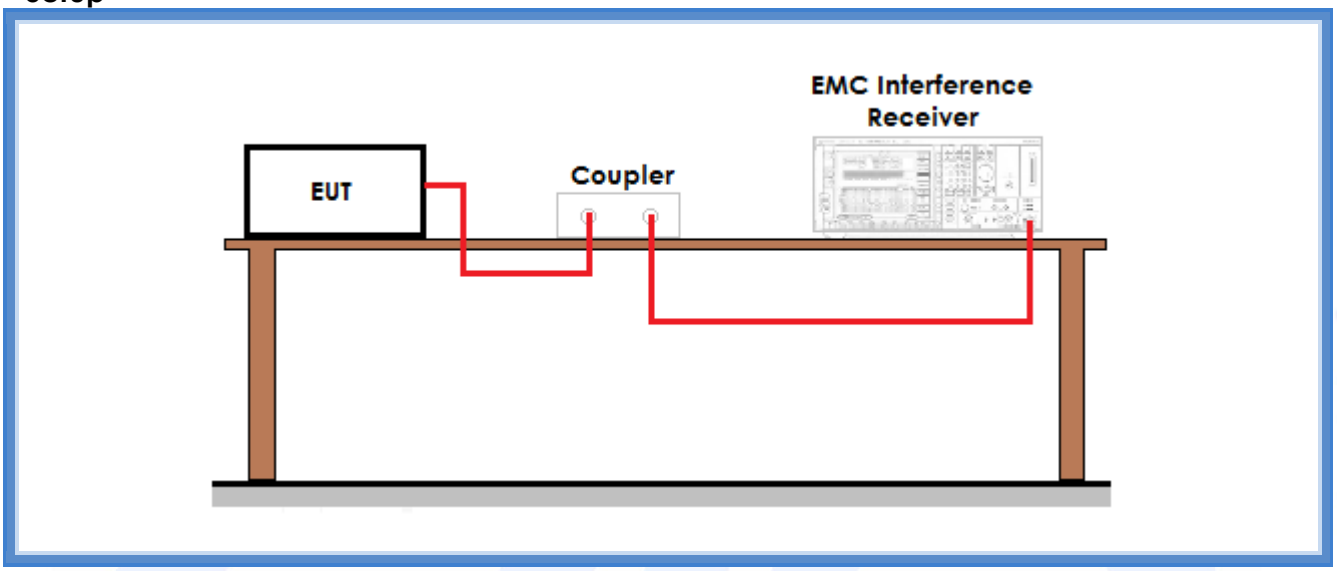

Result

Frequency (MHz)	*Graphs*	*20 dB bandwidth (kHz)*	*Maximum 20 dB bandwidth allowed (kHz)*	*Results*
902,42	G161957100	104,39	500	Complies
915,00	G161957103	105,89	500	Complies
927,58	G161957105	106,39	500	Complies

CMC Centro Misure Compatibilità S.r.l.

Graphs

G161957100

Bertezzolo 161957100

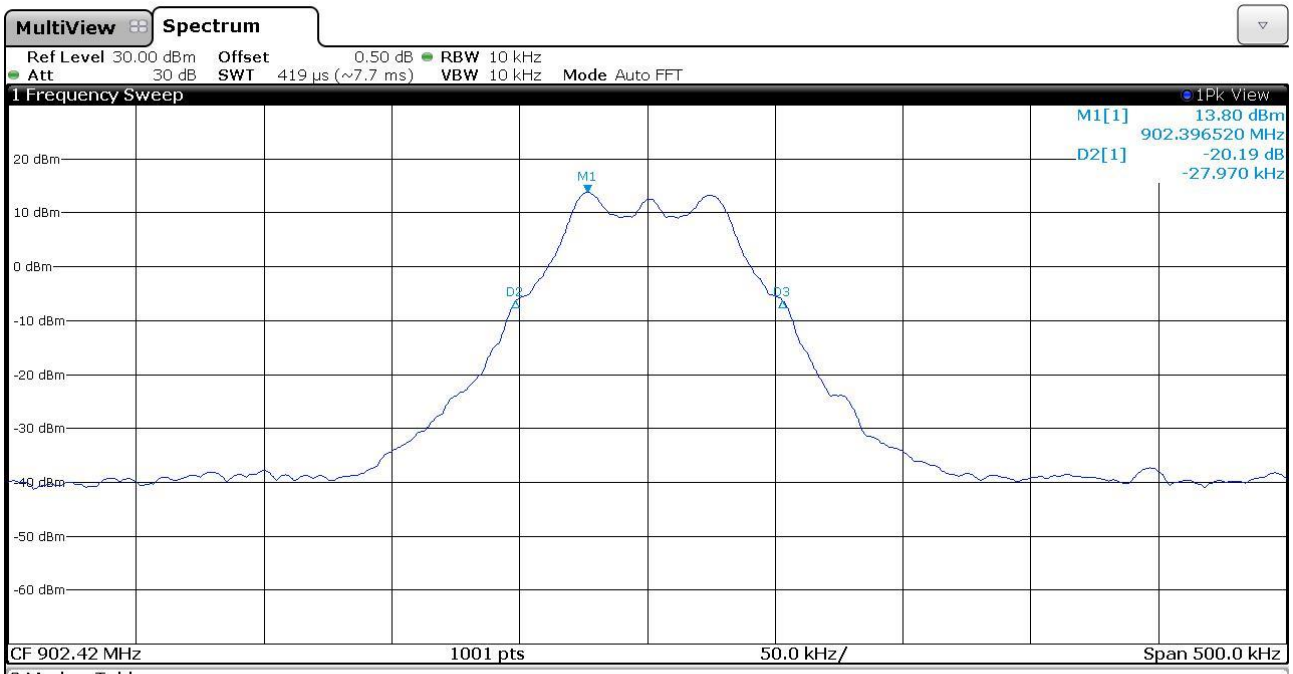

2 Marker Table

Type	Ref	Trc	X-Value	Y-Value	Function	Function Result
M1		1	902.39652 MHz	13.80 dBm		
D2	M1	1	-27.97 kHz	-20.19 dB		
D3	M1	1	76.42 kHz	-20.07 dB		

G161957103

Bertezzolo 161957103

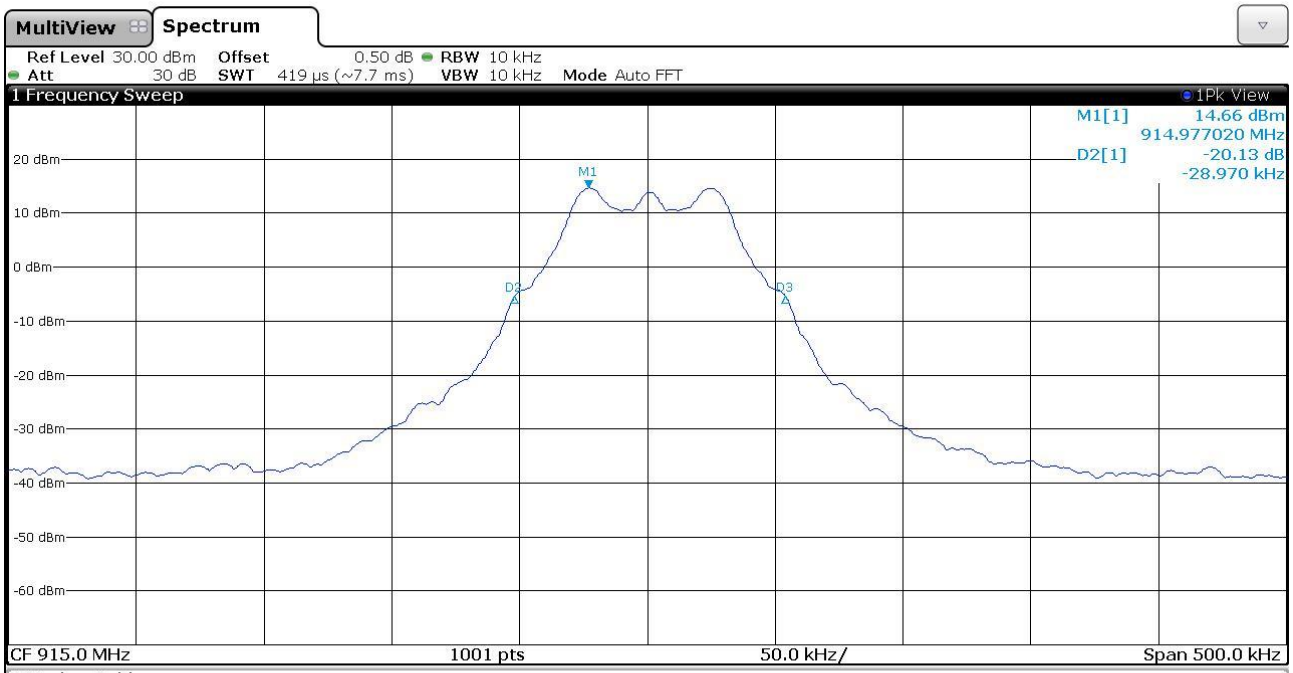

2 Marker Table

Type	Ref	Trc	X-Value	Y-Value	Function	Function Result
M1		1	**914.97702 MHz**	**14.66 dBm**		
D2	M1	1	**-28.97 kHz**	**-20.13 dB**		
D3	M1	1	**76.92 kHz**	**-20.04 dB**		

CMC Centro Misure Compatibilità S.r.l.

G161957105

Bertezzolo 161957105

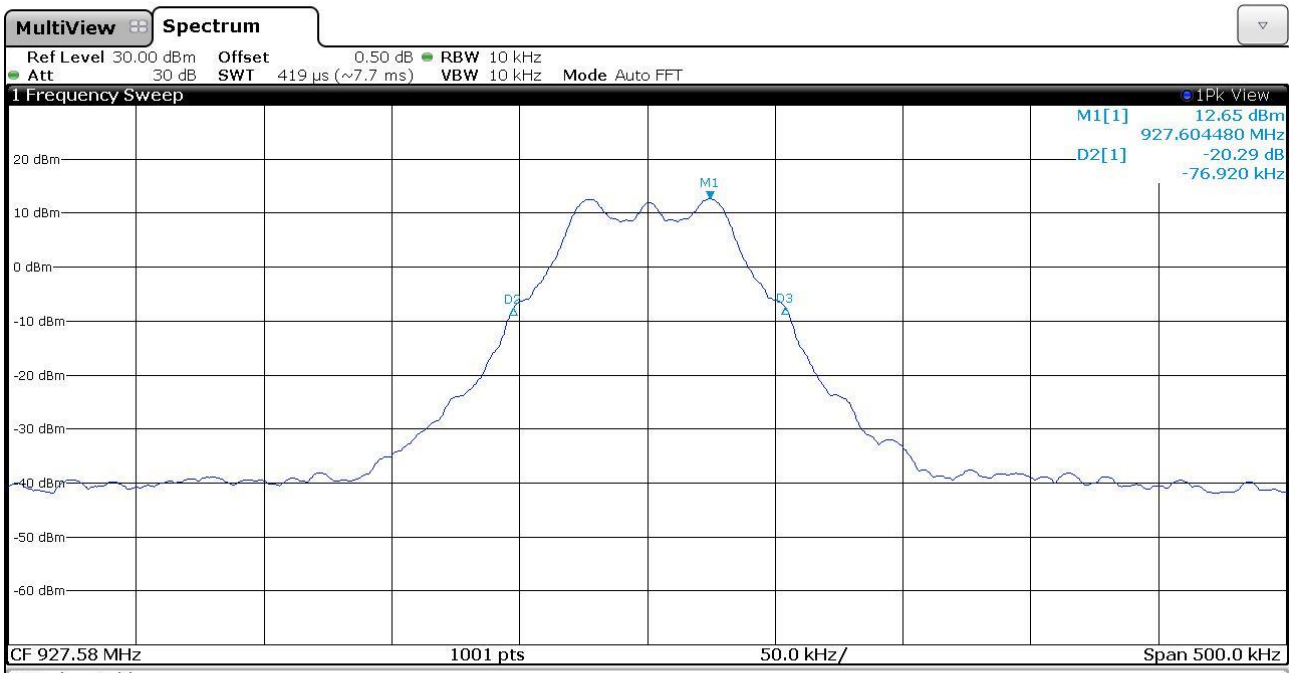

2 Marker Table

Type	Ref	Trc	X-Value	Y-Value	Function	Function Result
M1		1	927.60448 MHz	12.65 dBm		
D2	M1	1	-76.92 kHz	-20.29 dB		
D3	M1	1	29.47 kHz	-20.16 dB		

Result: The requirements are met

CMC Centro Misure Compatibilità S.r.l.

11.5 Channel separation

Test set-up and execution

- FCC Rules and Regulation; Titles 47 Part 15.247
- DA 00-705
- Internal procedure PM001
- See clause 4 of this test report

Test configuration and test method

Test site:
Laboratory

Auxiliary equipment:
See clause 4 of this test report

EUT exercising

See clause 4 of this test report

Test equipment used

CMC S108, CMC S136, CMC S227
Measurement uncertainty: See clause 7 of this test report

Test specification

See FCC Part 15.247

Environmental conditions

Temperature (°C)	*Atmospheric pressure (kPa)*	*Relative humidity (%)*
20	100	42

Acceptance limits: frequency hopping systems shall have hopping channel carrier frequencies separated by a minimum of 25 kHz or the 20 dB bandwidth of the hopping channel, whichever is greater. Alternatively, frequency hopping systems operating in the 2400–2483,5 MHz band may have hopping channel carrier frequencies that are separated by 25 kHz or two-thirds of the 20 dB bandwidth of the hopping channel, whichever is greater, provided the systems operate with an output power no greater than 125 mW

CMC Centro Misure Compatibilità S.r.l.

Setup

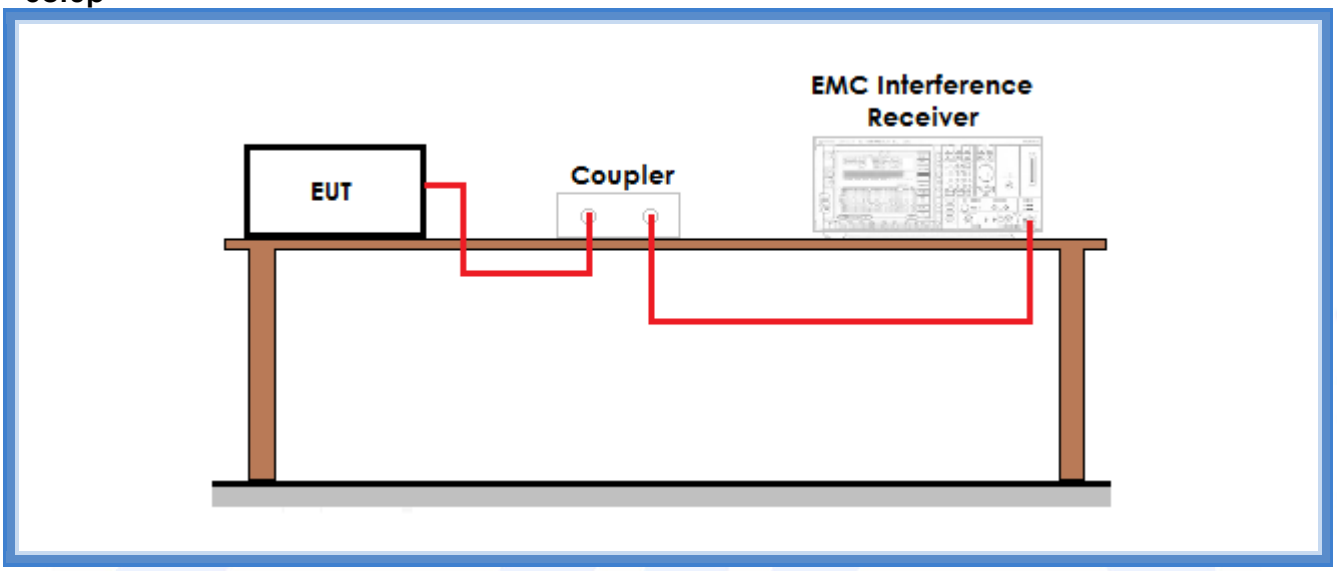

Result

Frequency band (MHz)	*Graphs*	*Channel separation (kHz)*	*Minimum channel separation required (kHz)*	*Results*
902,42 – 927,58	G161957119	339,86	25 kHz or the 20 dB bandwidth of the hopping channel, whichever is greater	Complies

Graphs

G161957119

Bertezzolo 161957119

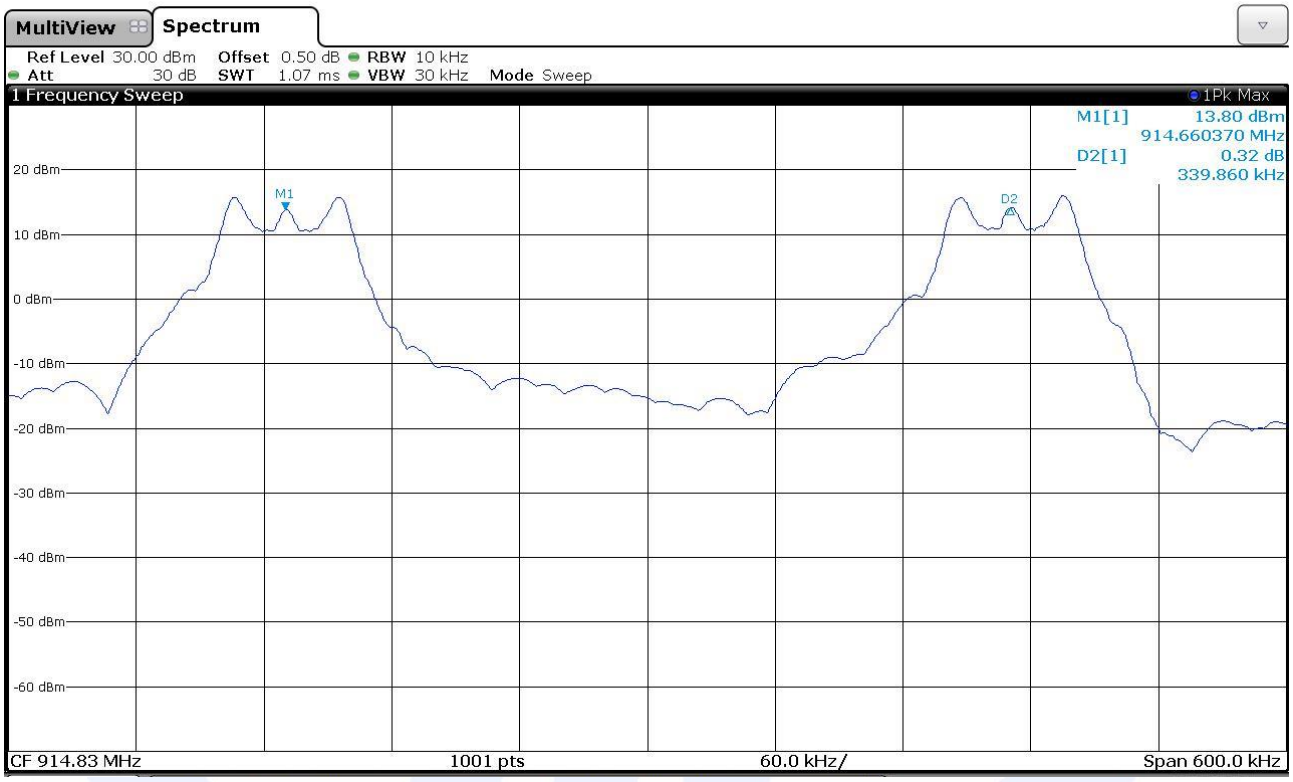

Result: The requirements are met

CMC Centro Misure Compatibilità S.r.l.

11.6 Number of hopping channels

Test set-up and execution

- FCC Rules and Regulation; Titles 47 Part 15.247
- DA 00-705
- Internal procedure PM001
- See clause 4 of this test report

Test configuration and test method

Test site:
Laboratory

Auxiliary equipment:
See clause 4 of this test report

EUT exercising

See clause 4 of this test report

Test equipment used

CMC S108, CMC S136, CMC S227
Measurement uncertainty: See clause 7 of this test report

Test specification

See FCC Part 15.247

Environmental conditions

Temperature (°C)	*Atmospheric pressure (kPa)*	*Relative humidity (%)*
20	100	42

Acceptance limits: for frequency hopping systems operating in the 902–928 MHz band: if the 20 dB bandwidth of the hopping channel is less than 250 kHz, the system shall use at least 50 hopping frequencies. If the 20 dB bandwidth of the hopping channel is 250 kHz or greater, the system shall use at least 25 hopping frequencies. Frequency hopping systems in the 2400–2483.5 MHz band shall use at least 15 channels.

CMC Centro Misure Compatibilità S.r.l.

Setup

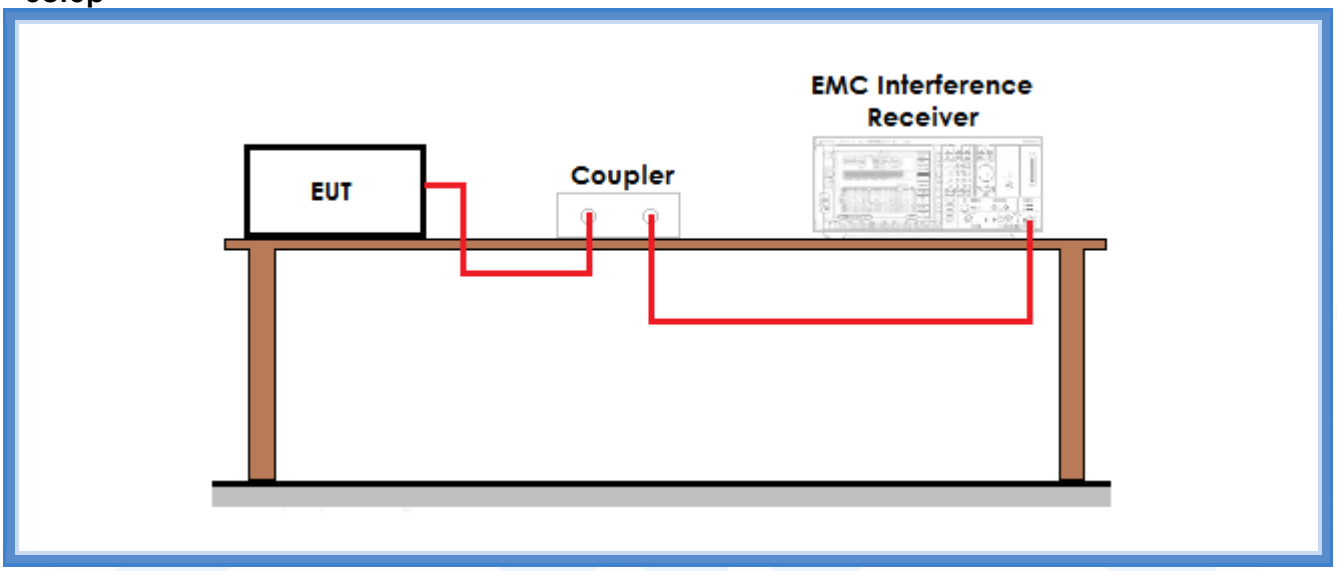

Result

Frequency band (MHz)	*Graphs*	*Number of hopping channels*	*Minimum number of hopping channels required*	*Results*
902,42 – 927,58	G161957122	75	50 if the 20 dB bandwidth is less than 250 kHz 25 if the 20 dB bandwidth is 250 kHz or greater	Complies

CMC Centro Misure Compatibilità S.r.l.

Graphs

G161957122

Bertezzolo 161957122

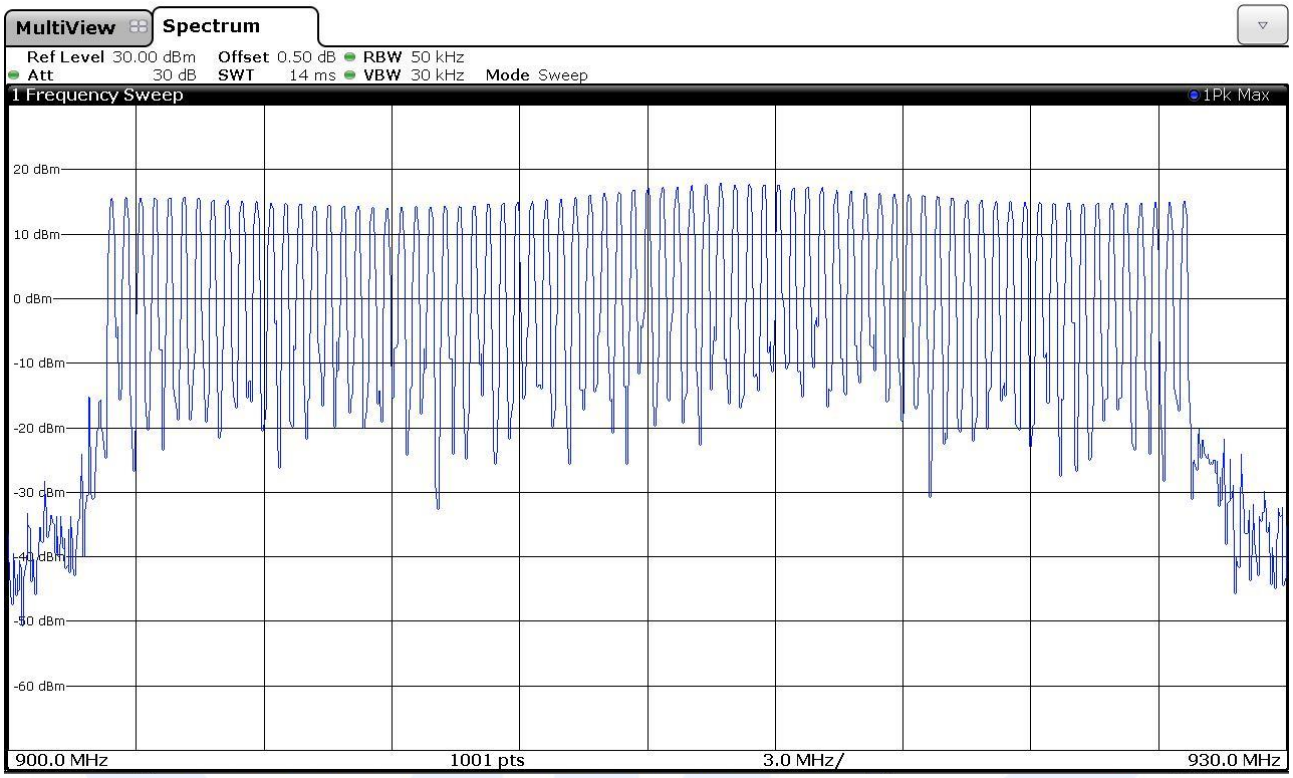

Result: The requirements are met

CMC Centro Misure Compatibilità S.r.l.

11.7 Time of occupancy

Test set-up and execution

- FCC Rules and Regulation; Titles 47 Part 15.247
- DA 00-705
- Internal procedure PM001
- See clause 4 of this test report

Test configuration and test method

Test site:
Laboratory

Auxiliary equipment:
See clause 4 of this test report

EUT exercising

See clause 4 of this test report

Test equipment used

CMC S108, CMC S136, CMC S227
Measurement uncertainty: See clause 7 of this test report

Test specification

See FCC Part 15.247

Environmental conditions

Temperature (°C)	*Atmospheric pressure (kPa)*	*Relative humidity (%)*
22	100	42

Acceptance limits:
For frequency hopping systems operating in the 902–928 MHz band: if the 20 dB bandwidth of the hopping channel is less than 250 kHz, the system shall use at least 50 hopping frequencies and the average time of occupancy on any frequency shall not be greater than 0,4 seconds within a 20 second period; if the 20 dB bandwidth of the hopping channel is 250 kHz or greater, the system shall use at least 25 hopping frequencies and the average time of occupancy on any frequency shall not be greater than 0,4 seconds within a 10 second period

CMC Centro Misure Compatibilità S.r.l.

Setup

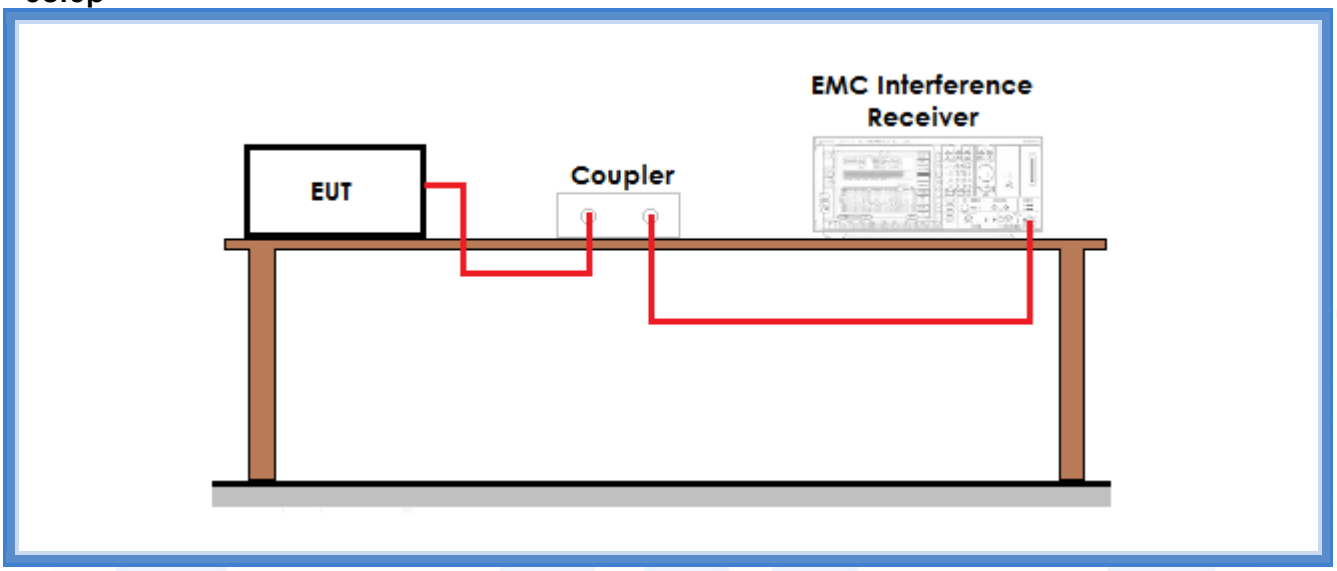

Result

Dwell time of transmission

Frequency (MHz)	*Graphs*	*Dwell time (ms)*
927,58	G161957123	257,7

Frequency (MHz)	*Transmission duration on 1 channel*	
927,58	G161957125	379,5 ms

Frequency (MHz)	*Time between 2 transmission on different channels*	
927,58	G161957125	13,15 ms

CMC Centro Misure Compatibilità S.r.l.

Graphs

G161957123

Bertezzolo 161957123

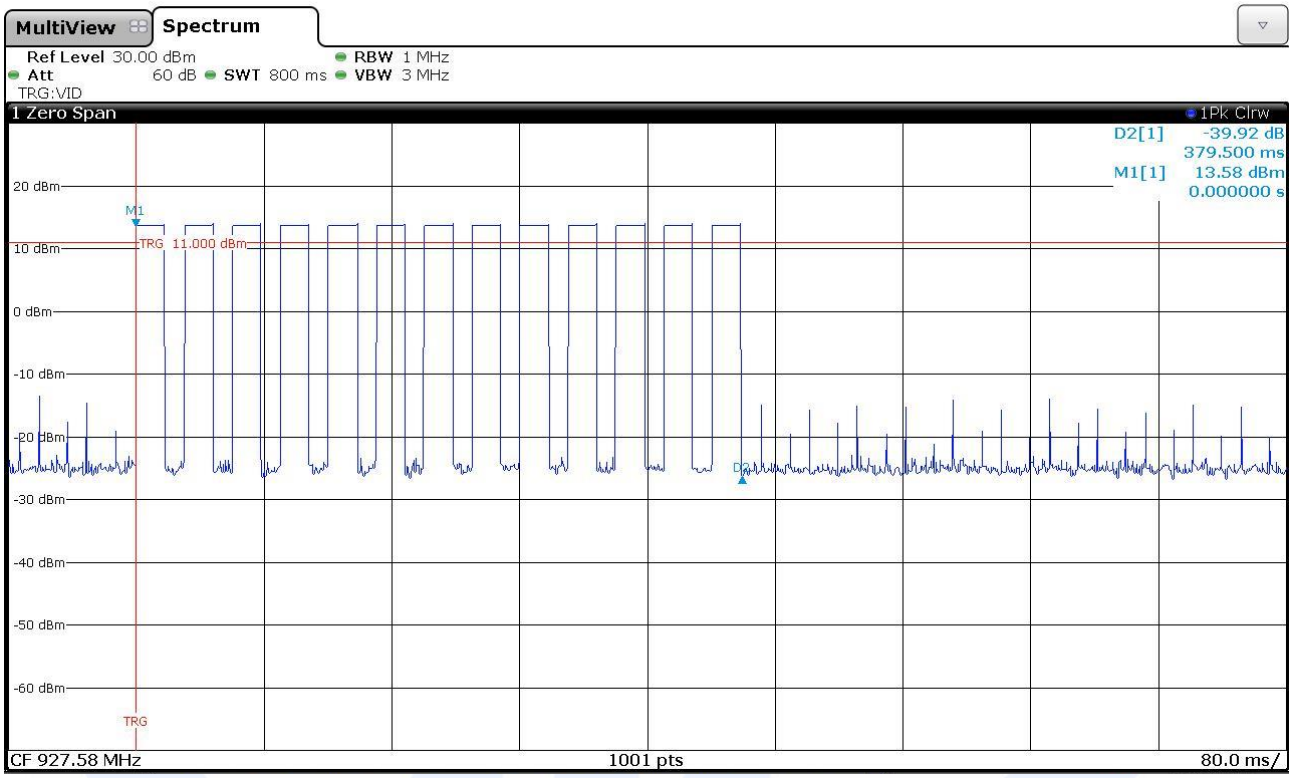

G161957125

Bertezzolo 161957125

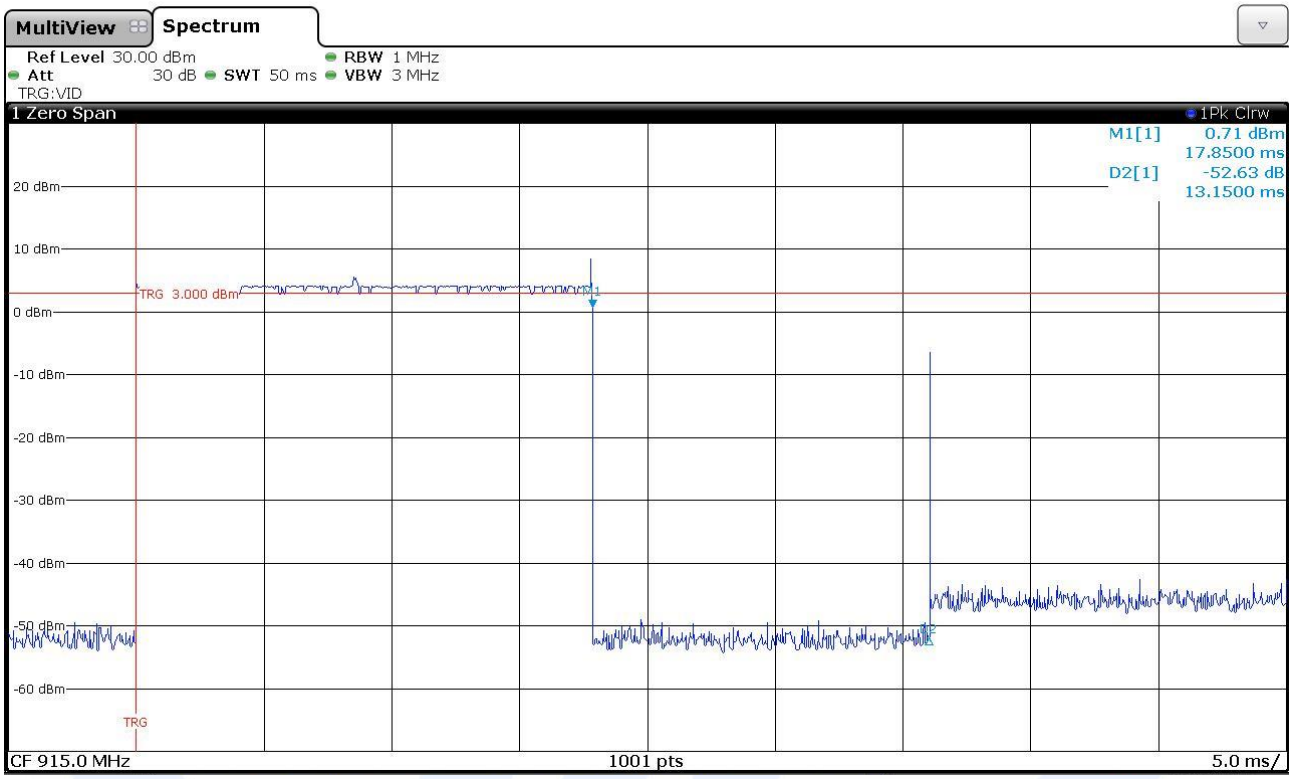

Result: The requirements are met

11.8 Band edge

Test set-up and execution

- FCC Rules and Regulation; Titles 47 Part 15.247
- DA 00-705
- Internal procedure PM001
- See clause 4 of this test report

Test configuration and test method

Test site:
Laboratory

Auxiliary equipment:
See clause 4 of this test report

EUT exercising

See clause 4 of this test report

Test equipment used

CMC S108, CMC S136, CMC S227
Measurement uncertainty: See clause 7 of this test report

Test specification

See FCC Part 15.247

Environmental conditions

Temperature (°C)	*Atmospheric pressure (kPa)*	*Relative humidity (%)*
22	100	45

Acceptance limits: operation within the band 902 – 928 MHz

CMC Centro Misure Compatibilità S.r.l.

Setup

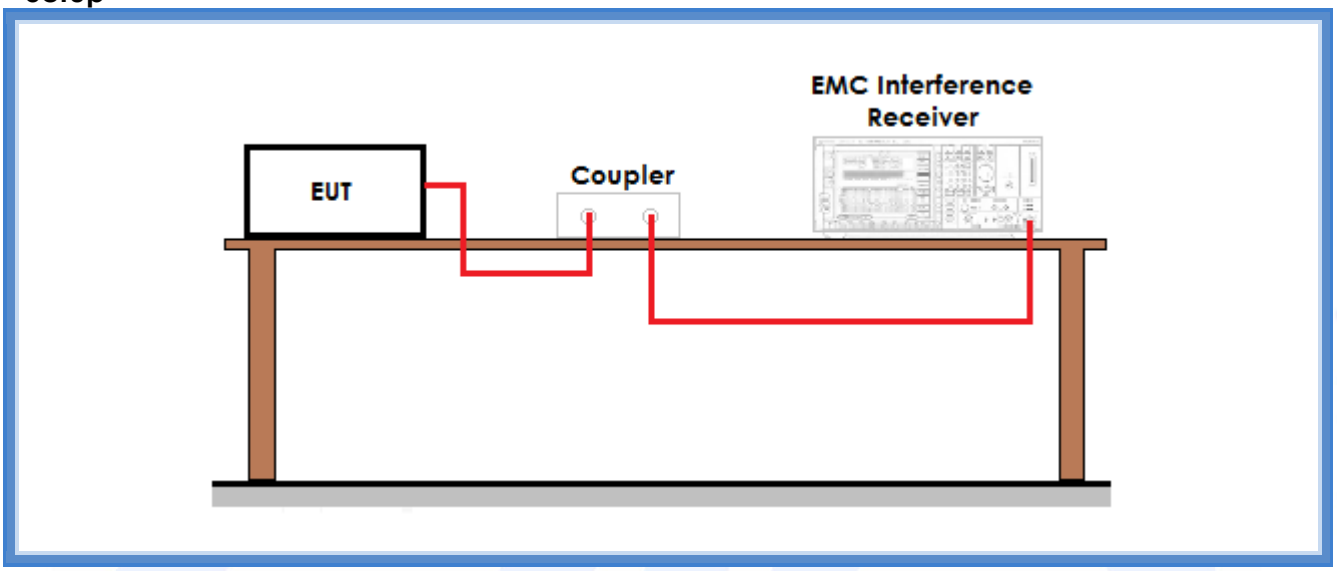

Result

Frequency (MHz)	*Graph(s) – Hopping*	*Results*	
902,42	G161957118	F_L: 902,2957 MHz	Complies
927,58	G161957115	F_H: 927,7203 MHz	Complies

Frequency (MHz)	*Graph(s) – No hopping*	*Results*	
902,42	G161957117	F_L: 902,3517 MHz	Complies
927,58	G161957116	F_H: 927,6504 MHz	Complies

CMC Centro Misure Compatibilità S.r.l.

Graphs

G16195715

Bertezzolo 161957115

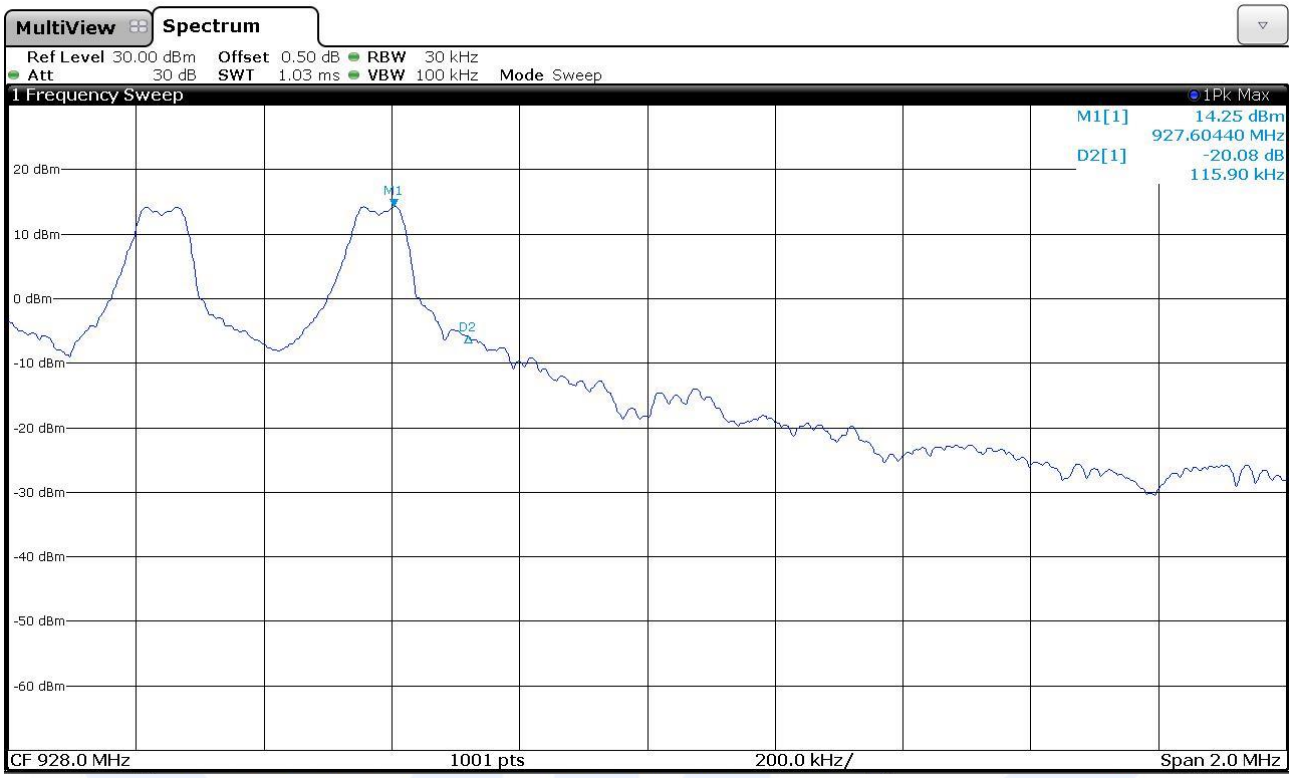

G16195716

Bertezzolo 161957116

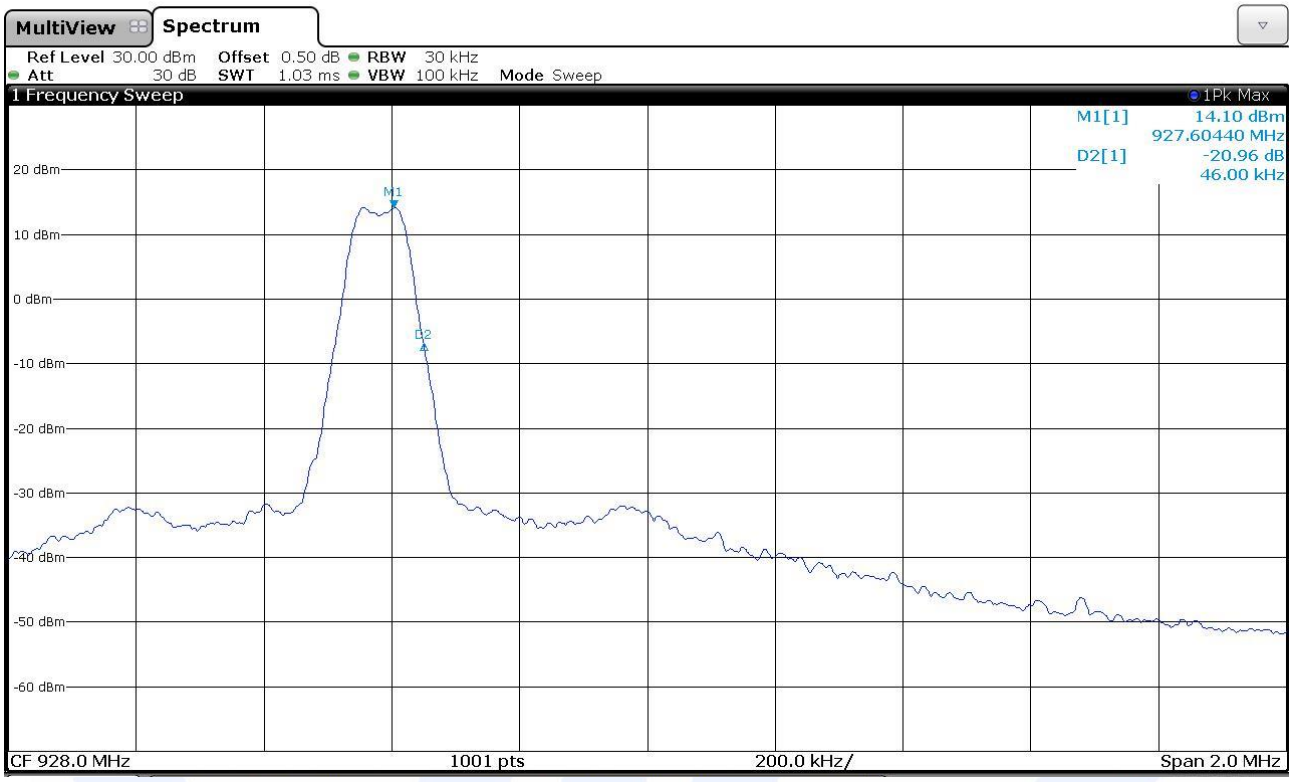

G16195717

Bertezzolo 161957117

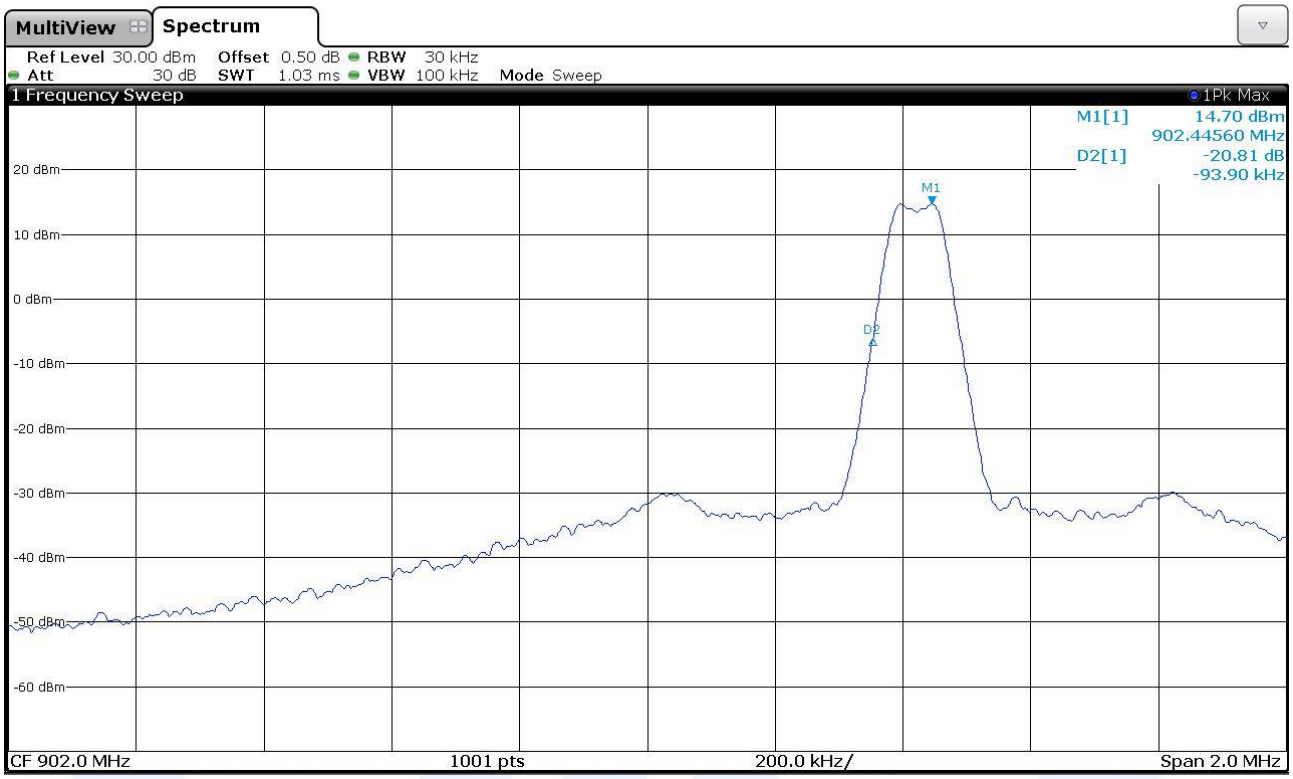

G16195718

Bertezzolo 161957118

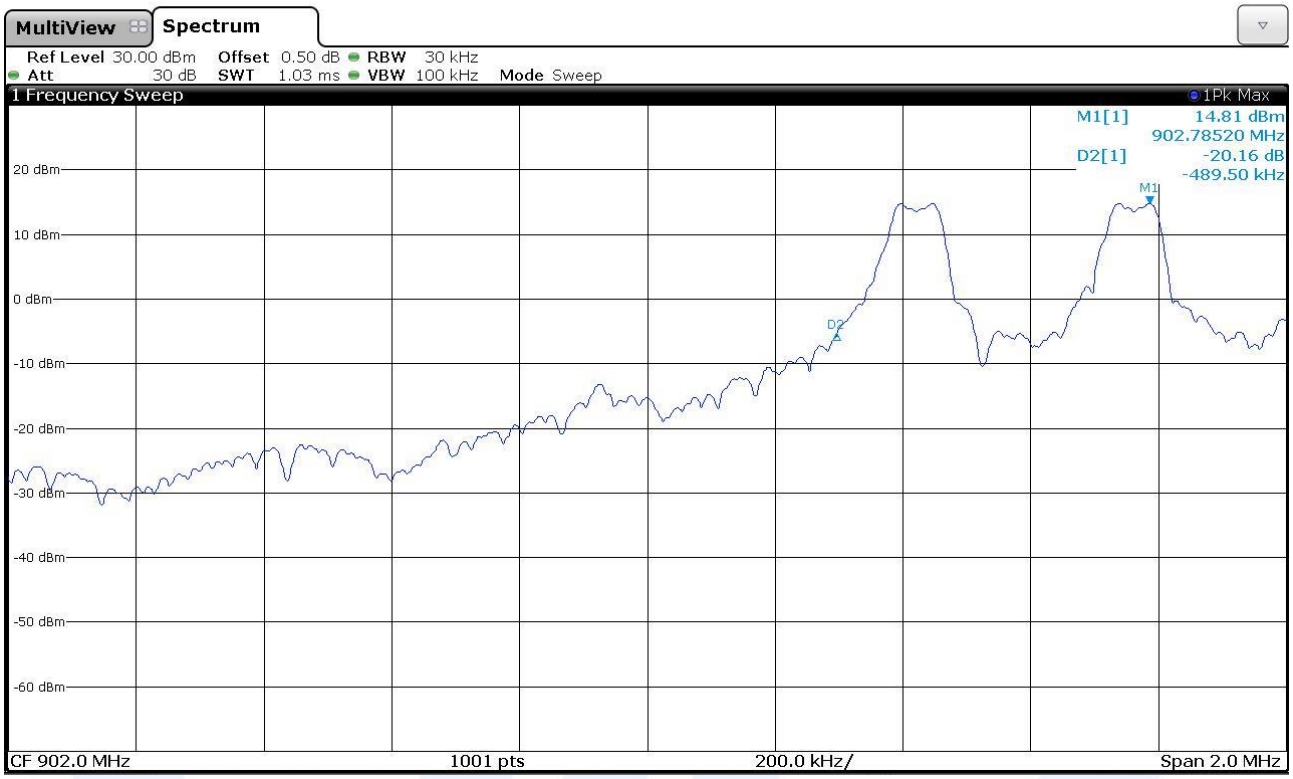

Result: The requirements are met

11.9 Peak Output Power

Test set-up and execution

- FCC Rules and Regulation; Titles 47 Part 15.247
- DA 00-705
- Internal procedure PM001
- See clause 4 of this test report

Test configuration and test method

Test site:
Laboratory

Auxiliary equipment:
See clause 4 of this test report

EUT exercising

See clause 4 of this test report

Test equipment used

CMC S108, CMC S136, CMC S164
Measurement uncertainty: See clause 7 of this test report

Test specification

Port: Antenna

Environmental conditions

Temperature (°C)	*Atmospheric pressure (kPa)*	*Relative humidity (%)*
20	100	45

For frequency hopping systems operating in the 2400–2483,5 MHz band employing at least 75 non-overlapping hopping channels, and all frequency hopping systems in the 5725–5850 MHz band: 1 watt. For all other frequency hopping systems in the 2400–2483,5 MHz band: 0,125 watts. For frequency hopping systems operating in the 902–928 MHz band: 1 watt for systems employing at least 50 hopping channels; and, 0,25 watts for systems employing less than 50 hopping channels, but at least 25 hopping channels.

CMC Centro Misure Compatibilità S.r.l.

Setup

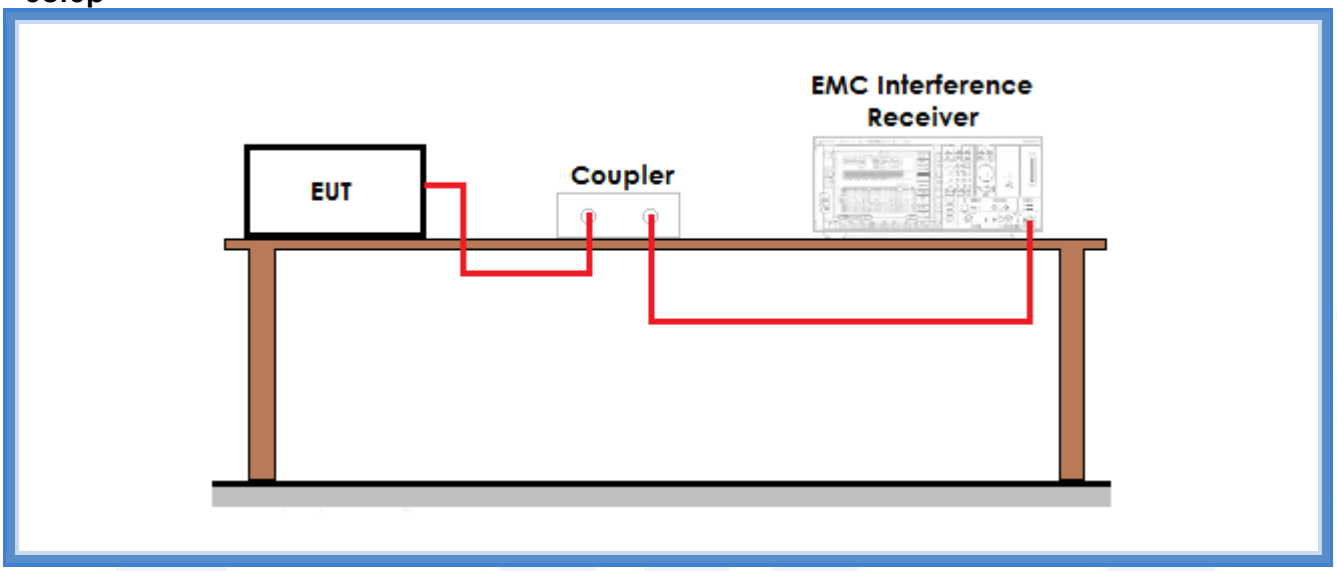

Result

Frequency (MHz)	*Graphs*	*Conducted measured level (dBm)*	*Conducted power level (mW)*	*Calculated radiated level (dBµV/m)*
902,42	G161957106	14,56	28,58	111,94
915,00	G161957107	15,84	38,37	113,22
927,58	G161957108	13,92	24,66	111,30

CMC Centro Misure Compatibilità S.r.l.

Graphs

G161957106

Bertezzolo 161957106

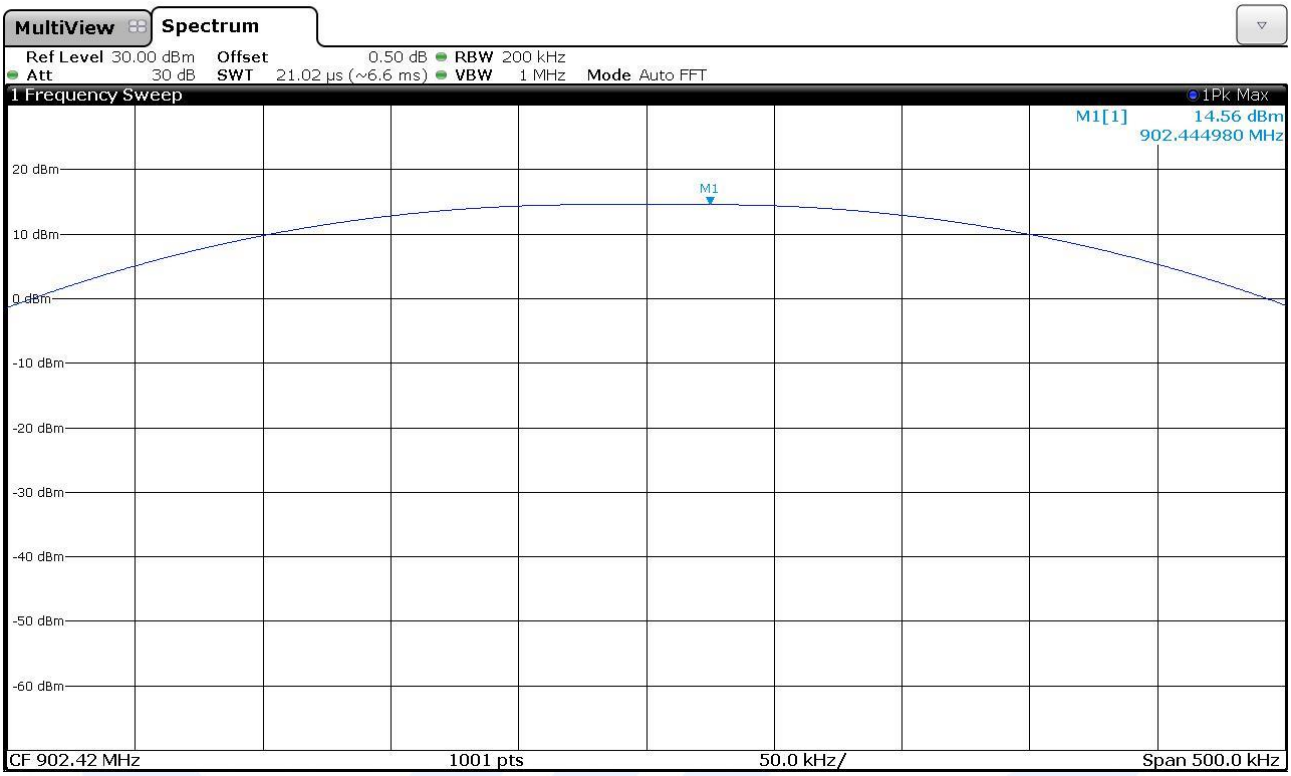

G161957107

Bertezzolo 161957107

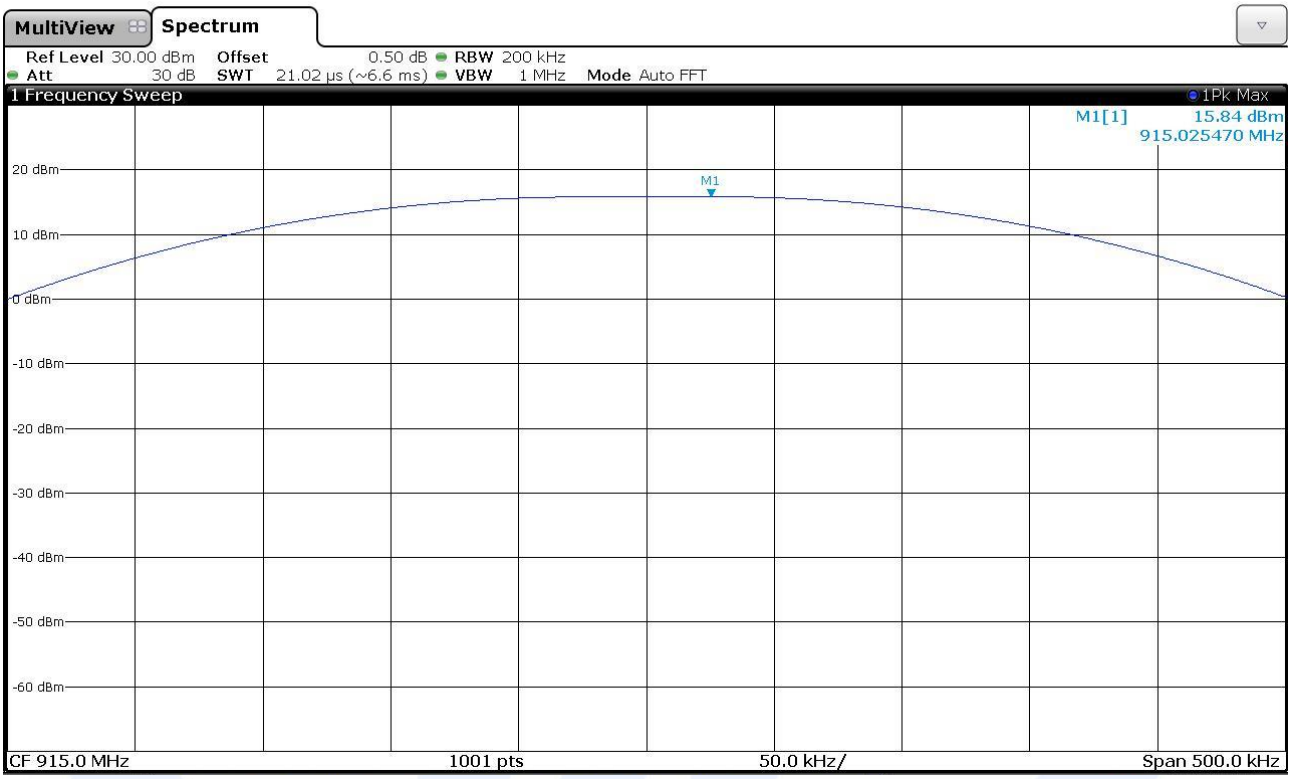

G161957108

Bertezzolo 161957108

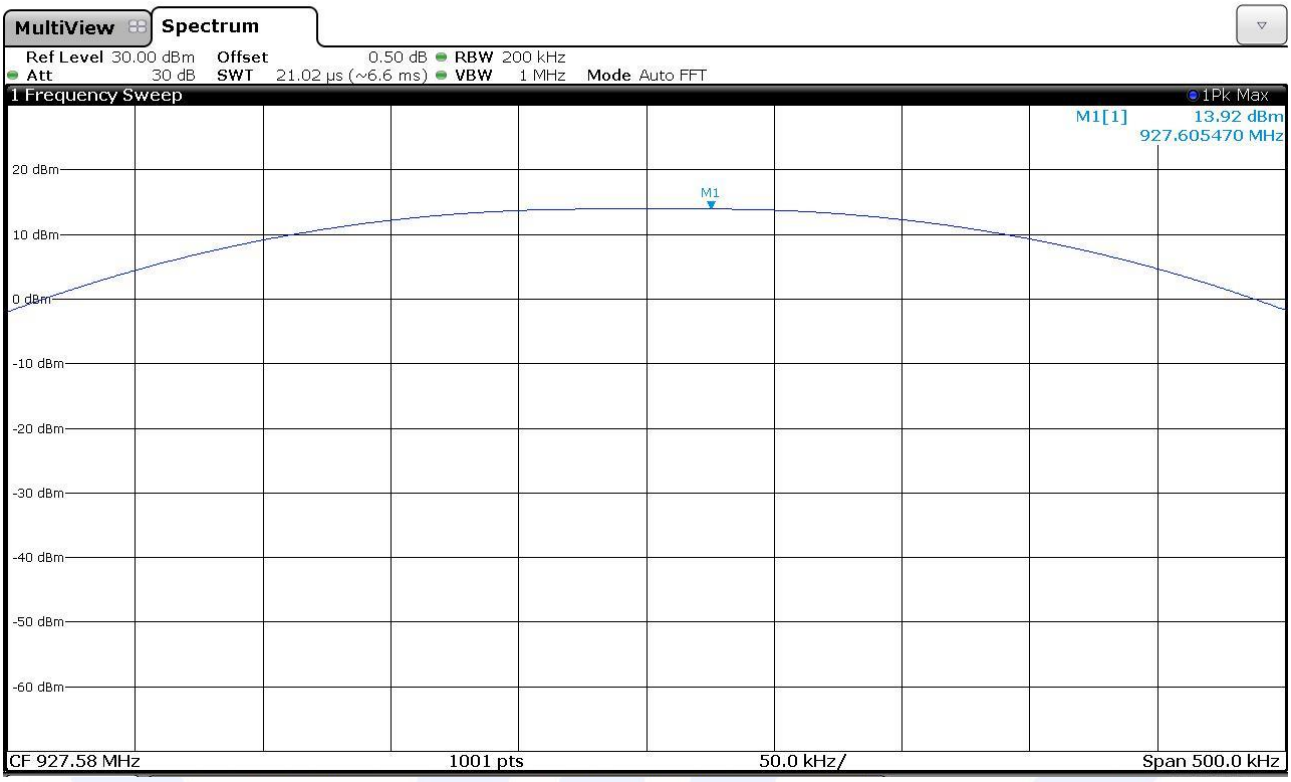

Result: The requirements are met

CMC Centro Misure Compatibilità S.r.l.

11.10 Spurious Emission

Test set-up and execution

- FCC Rules and Regulation; Titles 47 Part 15.209
- DA 00-705
- Internal procedure PM001
- See clause 4 of this test report

Test configuration and test method

Test site:
Semi-anechoic chamber

Auxiliary equipment:
See clause 4 of this test report

EUT exercising

See clause 4 of this test report

Test equipment used

CMC S108, CMC S136, CMC S164
Measurement uncertainty: See clause 7 of this test report

Test specification

Port: Enclosure
Antenna polarization: Horizontal (H) – Vertical (V)
EUT – Antenna distance: 3 m
Detector AV + Peak

Environmental conditions

Temperature (°C)	*Atmospheric pressure (kPa)*	*Relative humidity (%)*
22	100	45

Acceptance limits

Acceptance limits for emissions in restricted frequency bands		
Frequency (MHz)	*AV limits [dB(µV/m)]*	*Peak limits [dB(µV/m)]*
> 1000	54	74

CMC Centro Misure Compatibilità S.r.l.

The restricted frequency bands are listed in the following table

MHz	MHz	MHz	GHz
0,090 – 0,110	16,42 – 16,423	399,9 – 410	4,5 – 5,15
0,495 – 0,505	16,69475 – 16,69525	608 – 614	5,35 – 5,46
2,1735 – 2,1905	16,80425 – 16,80475	960 – 1240	7,25 – 7,75
4,125 – 4,128	25,5 – 25,67	1300 – 1427	8,025 – 8,5
4,17725 – 4,17775	37,5 – 38,25	1435 – 1626,5	9,0 – 9,2
4,20725 – 4,20775	73 – 74,6	1645,5 – 1646,5	9,3 – 9,5
6,215 – 6,218	74,8 – 75,2	1660 – 1710	10,6 – 12,7
6,26775 – 6,26825	108 – 121,94	1718,8 – 1722,2	13,25 – 13,4
6,31175 – 6,31225	123 – 138	2200 – 2300	14,47 – 14,5
8,291 – 8,294	149,9 – 150,05	2310 – 2390	15,35 – 16,2
8,362 – 8,366	156,52475 – 156,52525	2483,5 – 2500	17,7 – 21,4
8,37625 – 8,38675	156,7 – 156,9	2690 – 2900	22,01 – 23,12
8,41425 – 8,41475	162,0125 – 167,17	3260 – 3267	23,6 – 24,0
12,29 – 12,293	167,72 – 173,2	3332 – 3339	31,2 – 31,8
12,51975 – 12,52025	240 – 285	3345,8 – 3358	36,43 – 36,5
12,57675 – 12,57725	322 – 335,4	3600 – 4400	Above 38,6
13,36 – 13,41			

Acceptance limits for emissions in non-restricted frequency bands
In any 100 kHz bandwidth outside the frequency band in which the spread spectrum or digitally modulated intentional radiator is operating, the radio frequency power that is produced by the intentional radiator shall be at least 20 dB below that in the 100 kHz bandwidth within the band that contains the highest level of the desired power, based on either an RF conducted or a radiated measurement, provided the transmitter demonstrates compliance with the peak conducted power limits.

CMC Centro Misure Compatibilità S.r.l.

Setup

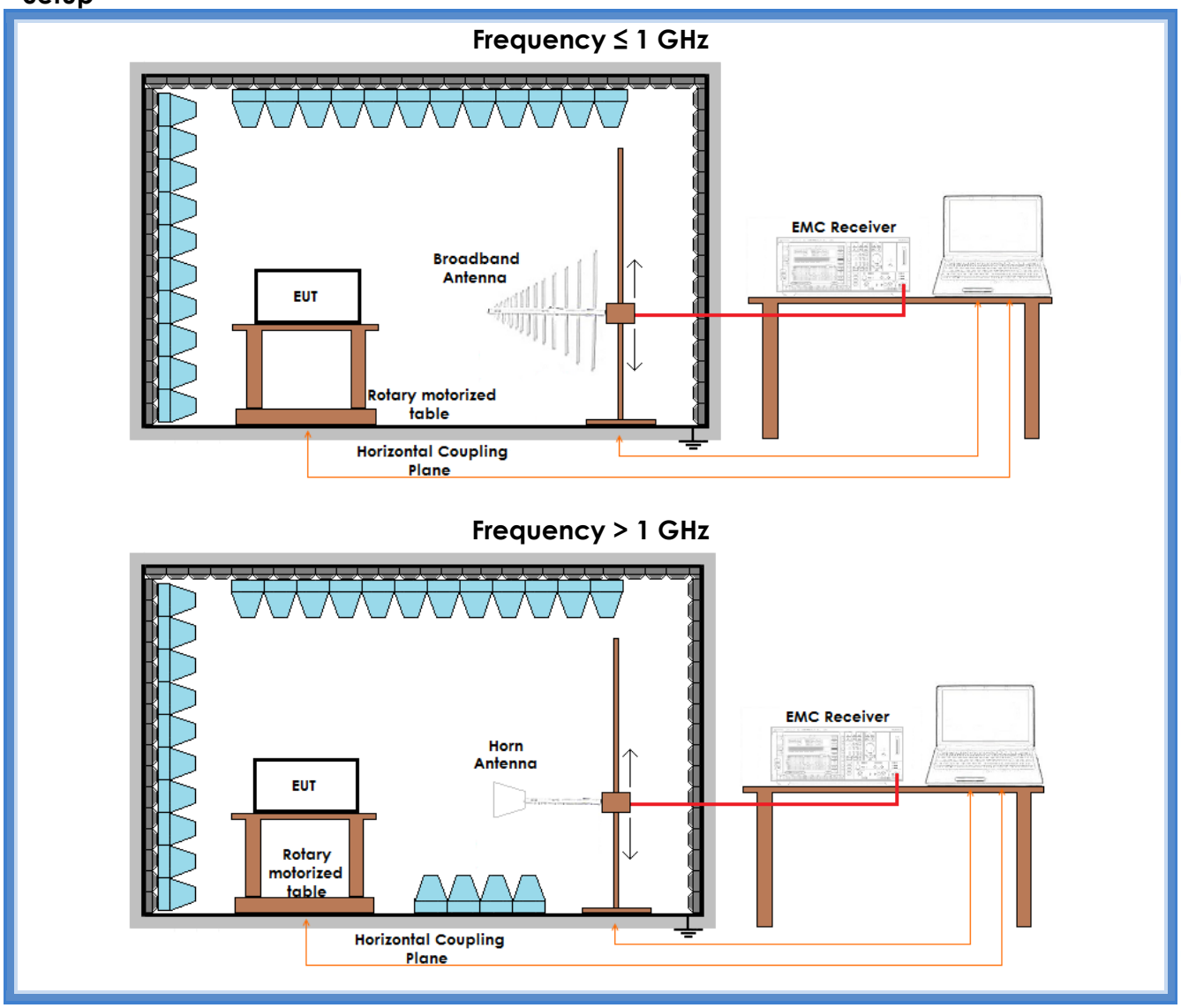

Graphs:	G161957131, G161957132, G161957133, G161957134, G161957135 and G161957136

CMC Centro Misure Compatibilità S.r.l.

Result – AV detector

Harmonic	Lowest channel		Medium channel		Highest channel		Results
	Level (dBµV/m)	Limits (dBµV/m)	Level (dBµV/m)	Limits (dBµV/m)	Level (dBµV/m)	Limits (dBµV/m)	
II	50,16*	54,00	51,41*	54,00	49,00*	54,00	Complies
III	44,69	54,00	47,26	54,00	44,86	54,00	Complies
IV	40,82	54,00	37,71	54,00	34,63	54,00	Complies
V	38,58	54,00	36,88	54,00	35,37	54,00	Complies
VI	41,17	54,00	42,35*	54,00	41,25*	54,00	Complies
VII	41,46*	54,00	46,83*	54,00	45,21*	54,00	Complies
VIII	42,82*	54,00	44,84	54,00	More than 20 dB below limit	54,00	Complies
IX	More than 20 dB below limit	54,00	More than 20 dB below limit	54,00	More than 20 dB below limit	54,00	Complies
X	More than 20 dB below limit	54,00	More than 20 dB below limit	54,00	More than 20 dB below limit	54,00	Complies

Remarks: EUT was tested in 3 orthogonal planes. The results in this table show the highest values. The emission values marked with * have been detected in non-restricted frequency bands. In these bands the limits have been always considered 54 dBµV/m as worst case.

Result – Peak detector

Harmonic	Lowest channel		Medium channel		Highest channel		Results
	Level (dBµV/m)	Limits (dBµV/m)	Level (dBµV/m)	Limits (dBµV/m)	Level (dBµV/m)	Limits (dBµV/m)	
II	54,49*	74,00	54,50*	74,00	52,85*	74,00	Complies
III	55,59	74,00	56,16	74,00	54,54	74,00	Complies
IV	53,03	74,00	50,96	74,00	47,96	74,00	Complies
V	51,17	74,00	47,74	74,00	48,26	74,00	Complies
VI	51,07	74,00	51,60*	74,00	50,87*	74,00	Complies
VII	51,70*	74,00	51,38*	74,00	52,54*	74,00	Complies
VIII	53,46*	74,00	53,71	74,00	More than 20 dB below limit	74,00	Complies
IX	More than 20 dB below limit	74,00	More than 20 dB below limit	74,00	More than 20 dB below limit	74,00	Complies
X	More than 20 dB below limit	74,00	More than 20 dB below limit	74,00	More than 20 dB below limit	74,00	Complies

Remarks: EUT was tested in 3 orthogonal planes. The results in this table show the highest values. The emission values marked with * have been detected in non-restricted frequency bands. In these bands the limits have been always considered 74 dBµV/m as worst case.

CMC Centro Misure Compatibilità S.r.l.

Graphs

G161957131

Meas Type	Emission 3m
Equipment under Test	
Manufacturer	
OP Condition	
Operator	Bertezzolo 161957131
Test Spec	

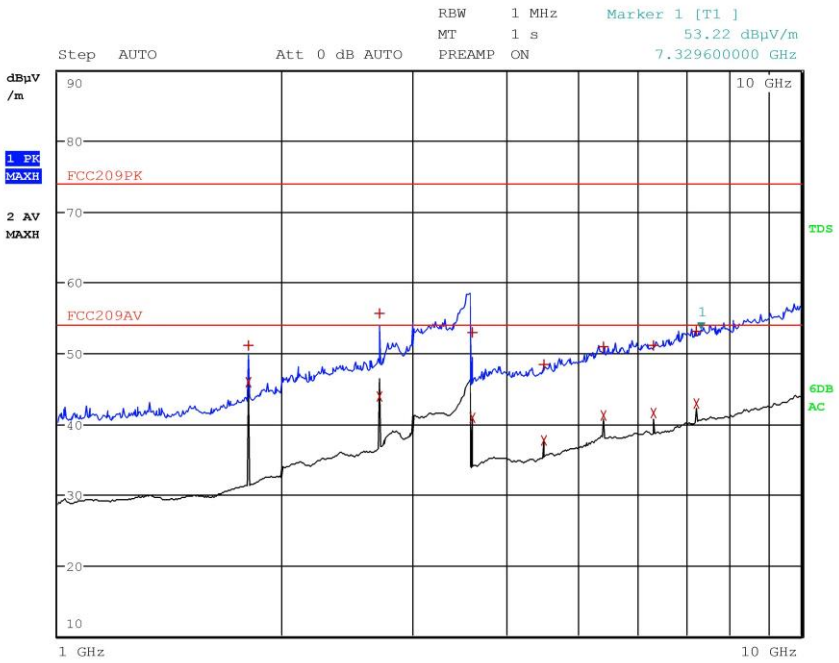

CMC Centro Misure Compatibilità S.r.l.

Meas Type	Emission 3m
Equipment under Test	
Manufacturer	
OP Condition	
Operator	Bertezzolo 161957131
Test Spec	

Final Measurement

Meas Time: 1 s
Margin: 6 dB
Subranges: 14

Trace	Frequency	Level (dBµV/m)	Detector	Delta Limit/dB
1	1.804800000 GHz	51.15	Max Peak	-22.83
2	1.804800000 GHz	45.83	Average	-8.15
1	2.707600000 GHz	55.59	Max Peak	-18.39
2	2.707600000 GHz	43.79	Average	-10.19
1	3.610000000 GHz	53.01	Max Peak	-20.97
2	3.610000000 GHz	40.82	Average	-13.16
1	4.511600000 GHz	48.34	Max Peak	-25.64
2	4.512000000 GHz	37.72	Average	-16.26
1	5.409600000 GHz	50.90	Max Peak	-23.08
2	5.414400000 GHz	41.17	Average	-12.81
2	6.316800000 GHz	41.46	Average	-12.52
1	6.338000000 GHz	51.16	Max Peak	-22.82
2	7.219200000 GHz	42.82	Average	-11.16
1	7.229200000 GHz	53.07	Max Peak	-20.91

CMC Centro Misure Compatibilità S.r.l.

G161957132

Meas Type	Emission 3m
Equipment under Test	
Manufacturer	
OP Condition	
Operator	Bertezzolo 161957132
Test Spec	

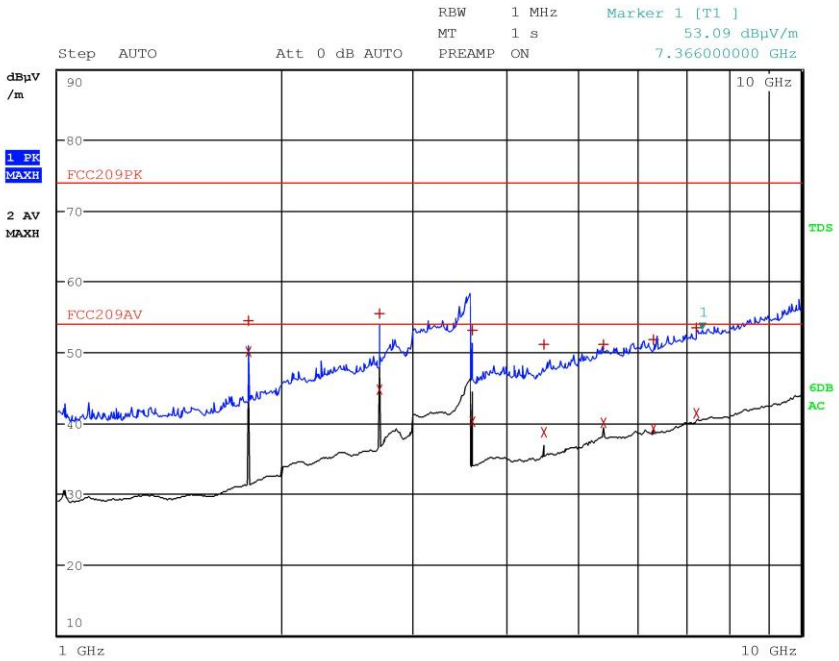

CMC Centro Misure Compatibilità S.r.l.

Meas Type	Emission 3m
Equipment under Test	
Manufacturer	
OP Condition	
Operator	Bertezzolo 161957132
Test Spec	

Final Measurement

Meas Time: 1 s
Margin: 6 dB
Subranges: 14

Trace	Frequency	Level (dBµV/m)	Detector	Delta Limit/dB
1	1.804800000 GHz	54.49	Max Peak	-19.49
2	1.804800000 GHz	50.16	Average	-3.82
1	2.707600000 GHz	55.44	Max Peak	-18.54
2	2.707600000 GHz	44.69	Average	-9.29
1	3.610000000 GHz	53.03	Max Peak	-20.95
2	3.610000000 GHz	40.09	Average	-13.89
1	4.511600000 GHz	51.17	Max Peak	-22.81
2	4.512000000 GHz	38.58	Average	-15.40
1	5.409600000 GHz	51.07	Max Peak	-22.91
2	5.414400000 GHz	40.06	Average	-13.92
2	6.316800000 GHz	39.23	Average	-14.75
1	6.338000000 GHz	51.70	Max Peak	-22.28
2	7.219200000 GHz	41.32	Average	-12.66
1	7.229200000 GHz	53.46	Max Peak	-20.52

CMC Centro Misure Compatibilità S.r.l.

G161957133

Meas Type	Emission 3m
Equipment under Test	
Manufacturer	
OP Condition	
Operator	Bertezzolo 161957133
Test Spec	

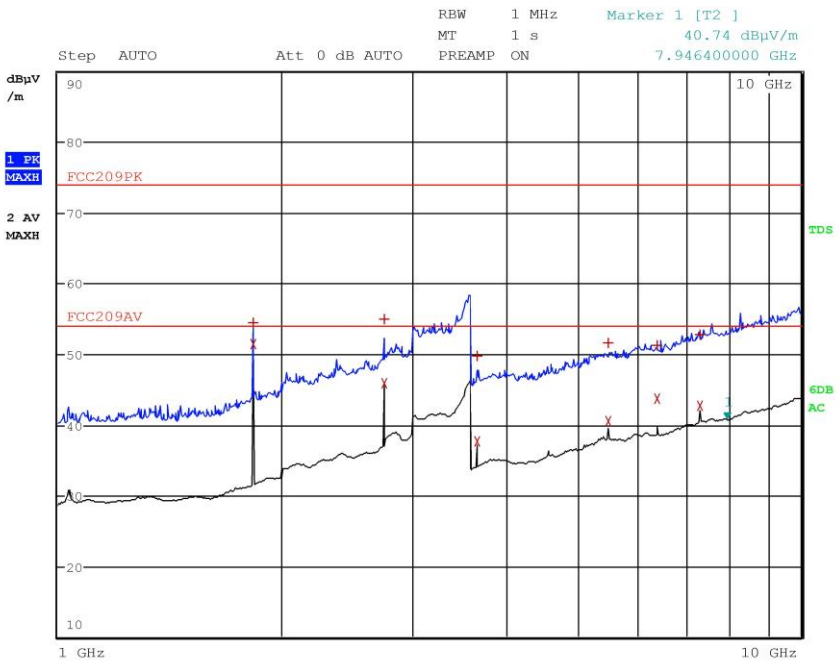

CMC Centro Misure Compatibilità S.r.l.

Meas Type	Emission 3m
Equipment under Test	
Manufacturer	
OP Condition	
Operator	Bertezzolo 161957133
Test Spec	

Final Measurement

Meas Time: 1 s
Margin: 6 dB
Subranges: 12

Trace	Frequency	Level (dBµV/m)	Detector	Delta Limit/dB
1	1.830000000 GHz	54.50	Max Peak	-19.48
2	1.830000000 GHz	51.41	Average	-2.57
1	2.745200000 GHz	54.90	Max Peak	-19.08
2	2.745200000 GHz	45.80	Average	-8.18
1	3.660000000 GHz	49.69	Max Peak	-24.29
2	3.660000000 GHz	37.71	Average	-16.27
2	5.490000000 GHz	40.54	Average	-13.44
1	5.510000000 GHz	51.60	Max Peak	-22.38
1	6.388400000 GHz	51.34	Max Peak	-22.64
2	6.405200000 GHz	43.66	Average	-10.32
1	7.319600000 GHz	52.77	Max Peak	-21.21
2	7.320000000 GHz	42.68	Average	-11.30

CMC Centro Misure Compatibilità S.r.l.

G161957134

Meas Type	Emission 3m
Equipment under Test	
Manufacturer	
OP Condition	
Operator	Bertezzolo 161957134
Test Spec	

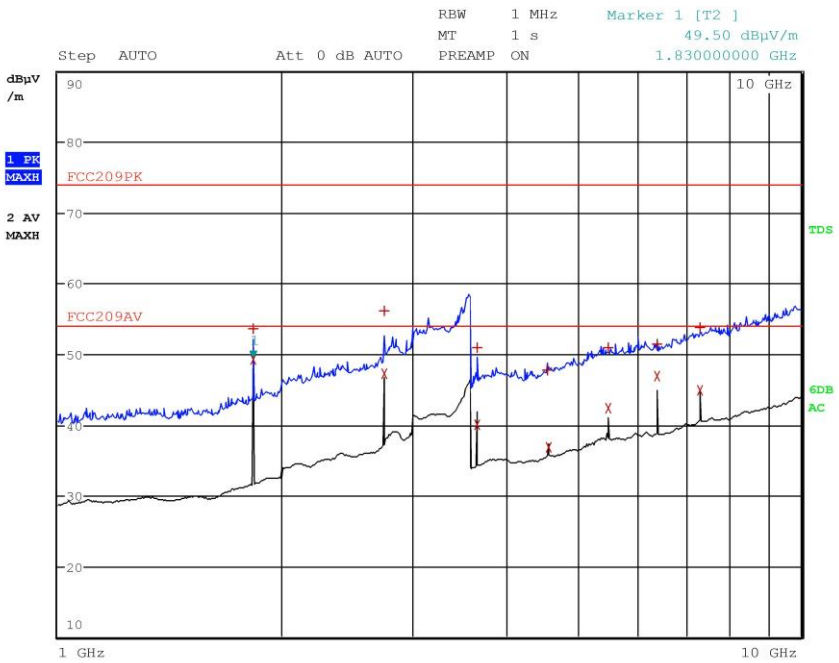

CMC Centro Misure Compatibilità S.r.l.

Meas Type	Emission 3m
Equipment under Test	
Manufacturer	
OP Condition	
Operator	Bertezzolo 161957134
Test Spec	

Final Measurement

Meas Time: 1 s
Margin: 6 dB
Subranges: 14

Trace	Frequency	Level (dBµV/m)	Detector	Delta Limit/dB
2	1.830000000 GHz	49.17	Average	-4.81
1	1.830000000 GHz	53.60	Max Peak	-20.38
2	2.745200000 GHz	47.26	Average	-6.72
1	2.745200000 GHz	56.16	Max Peak	-17.82
1	3.659600000 GHz	50.96	Max Peak	-23.02
2	3.660000000 GHz	39.96	Average	-14.02
1	4.559600000 GHz	47.74	Max Peak	-26.24
2	4.574800000 GHz	36.88	Average	-17.10
2	5.490000000 GHz	42.35	Average	-11.63
1	5.490400000 GHz	50.99	Max Peak	-22.99
1	6.404800000 GHz	51.38	Max Peak	-22.60
2	6.405200000 GHz	46.83	Average	-7.15
1	7.320000000 GHz	53.71	Max Peak	-20.27
2	7.320000000 GHz	44.84	Average	-9.14

CMC Centro Misure Compatibilità S.r.l.

G161957135

Meas Type	Emission 3m
Equipment under Test	
Manufacturer	
OP Condition	
Operator	Bertezzolo 161957135
Test Spec	

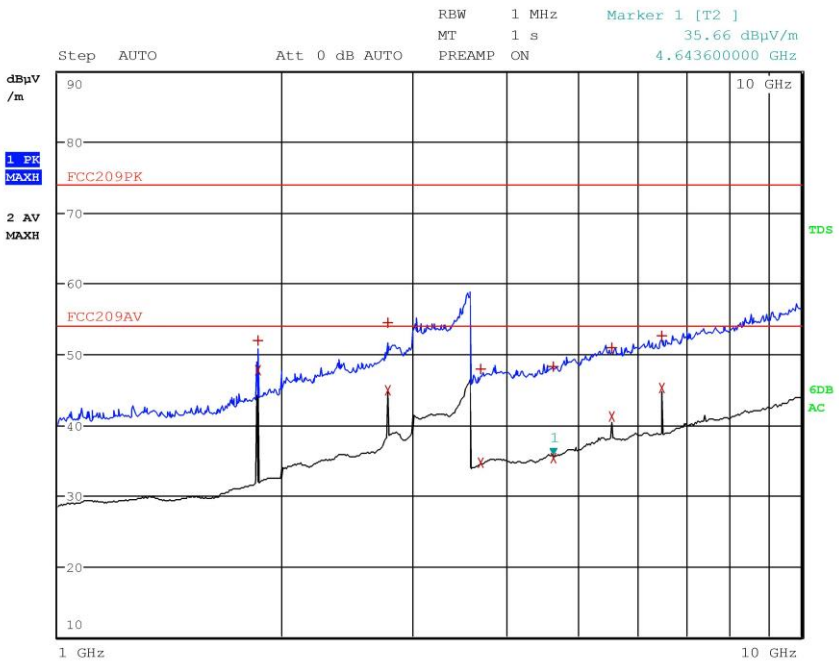

CMC Centro Misure Compatibilità S.r.l.

Meas Type	Emission 3m
Equipment under Test	
Manufacturer	
OP Condition	
Operator	Bertezzolo 161957135
Test Spec	

Final Measurement

Meas Time: 1 s
Margin: 6 dB
Subranges: 12

Trace	Frequency	Level (dBµV/m)	Detector	Delta Limit/dB
1	1.855200000 GHz	51.90	Max Peak	-22.08
2	1.855200000 GHz	47.78	Average	-6.20
1	2.782800000 GHz	54.54	Max Peak	-19.44
2	2.782800000 GHz	44.86	Average	-9.12
1	3.704000000 GHz	47.96	Max Peak	-26.02
2	3.710400000 GHz	34.63	Average	-19.35
1	4.635600000 GHz	48.26	Max Peak	-25.72
2	4.643600000 GHz	35.37	Average	-18.61
1	5.565600000 GHz	50.87	Max Peak	-23.11
2	5.565600000 GHz	41.25	Average	-12.73
1	6.493200000 GHz	52.54	Max Peak	-21.44
2	6.493200000 GHz	45.21	Average	-8.77

CMC Centro Misure Compatibilità S.r.l.

G161957136

Meas Type	Emission 3m
Equipment under Test	
Manufacturer	
OP Condition	
Operator	Bertezzolo 161957136
Test Spec	

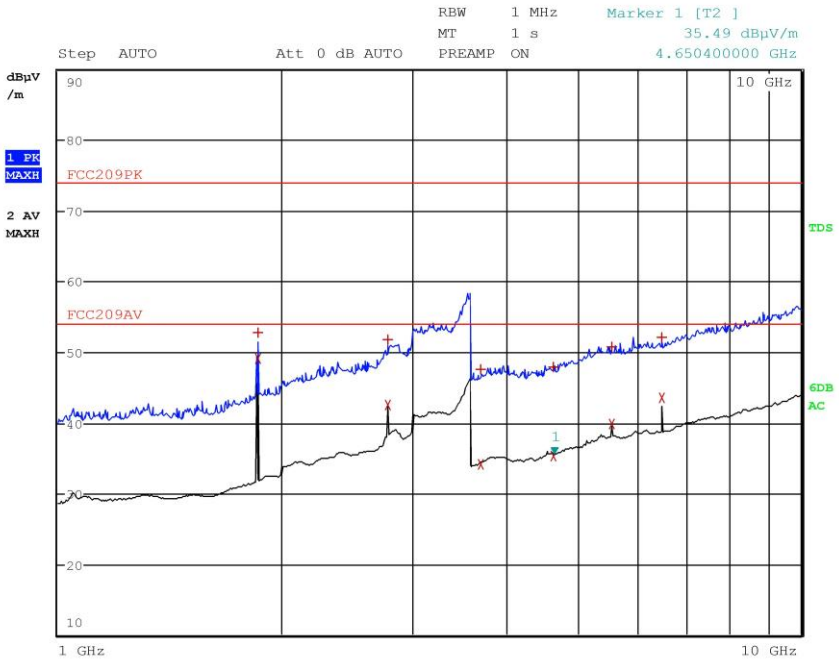

CMC Centro Misure Compatibilità S.r.l.

Meas Type	Emission 3m
Equipment under Test	
Manufacturer	
OP Condition	
Operator	Bertezzolo 161957136
Test Spec	

Final Measurement

Meas Time: 1 s
Margin: 6 dB
Subranges: 12

Trace	Frequency	Level (dBµV/m)	Detector	Delta Limit/dB
1	1.855200000 GHz	52.85	Max Peak	-21.13
2	1.855200000 GHz	49.00	Average	-4.98
1	2.782800000 GHz	51.70	Max Peak	-22.28
2	2.782800000 GHz	42.49	Average	-11.49
1	3.704000000 GHz	47.63	Max Peak	-26.35
2	3.710400000 GHz	34.04	Average	-19.94
1	4.635600000 GHz	47.92	Max Peak	-26.06
2	4.643600000 GHz	35.37	Average	-18.61
1	5.565600000 GHz	50.80	Max Peak	-23.18
2	5.565600000 GHz	39.79	Average	-14.19
1	6.493200000 GHz	52.15	Max Peak	-21.83
2	6.493200000 GHz	43.47	Average	-10.51

Result: The requirements are met

CMC Centro Misure Compatibilità S.r.l.

11.11 Maximum permissible exposure

Test set-up and execution

- FCC Rules and Regulation; Titles 47 Part 1.1310
- Internal procedure PM001
- See clause 4 of this test report

Test configuration

Test site:
Laboratory

Auxiliary equipment:
See clause 4 of this test report

EUT exercising

See clause 4 of this test report

Test equipment used

CMC S108, CMC S136, CMC S164
Measurement uncertainty: See clause 7 of this test report

Test specification

Port: Antenna

Acceptance limits	1 mW/cm^2 max at 20 cm of distance

Result

Power Density Limit (mW/cm2)	*Maximum Output Power (mW)*	*Antenna Gain (G)*	*Power Density at 20 cm (mW/cm2)*	*Remarks*
1,00	38,37	2,15 dBi	0,016	Measured
Remarks: Power Density = (P x G) / (4πR^2)				

Result: The requirements are met

CMC Centro Misure Compatibilità S.r.l.