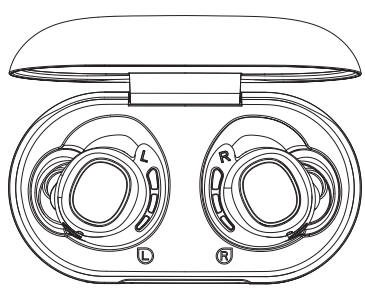

TWS U-Air

01 产品概览

耳机

① 耳翼
② 充电触点
③ 耳帽
④ 触摸感应区
(功能键;触摸有效即亮灯)
⑤ 耳机指示灯
⑥ 麦克风

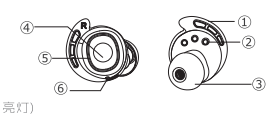

充口盒

① 充电盒盖
② 充电触针
③电量显示灯
④ Type C充电口

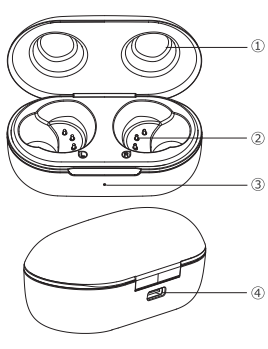

◎ 产品规格

产品名称：	U-Air	待机时间：	约70小时
支持模式：	HFP/HSP/A2DP	耳机电池容量：	35mAh /3.7V
蓝牙版本：	5.0	充电盒电池容量：	500mAh /3.7V
传输距离：	≥10米	工作时间：	2.5-3小时

02 功能操作

功能	操作
开机	开盒自动开机 / 手动开机，长触功能键5秒
关机	耳机放入充电盒并合盖自动关机 / 手动关机，长按功能键5秒
播放/暂停	打开音乐APP，轻触功能键2下
唤醒Siri	长触功能键2秒（待机状态）
接听/挂断	来电时/通话中轻触功能键2下
拒接	来电时长触功能键2秒
上一曲	播放音乐时，轻触左耳功能键3下
下一曲	播放音乐时，轻触右耳功能键3下

03 如何充电

首次使用，请确认耳机已充满电。

给耳机充电时请关盒

1）耳机充电
当充电盒给耳机充电时，A、蓝灯亮75%-100%电量，B、蓝/绿灯同时亮35%-75%电量，C、绿灯亮0-35%电量，当耳机充电满电约20秒后灯灭，充电盒自动关闭电源输出。

2）充电盒充电
请使用Type C接口的充电线，连接充电盒与电源即可充电。当适配器给充电盒充电时，A、蓝灯闪亮75%-100%电量，B、蓝/绿灯同时闪亮35%-75%电量，C、绿灯闪亮0-35%电量。充满后蓝灯长亮。

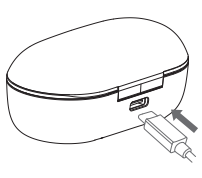

※请使用5V/1A的电源适配器。

04 佩戴示意

05 如何配对

1）首次使用
开盒自动开机并进入配对模式（左耳机蓝、绿灯交替闪烁，右耳机不闪灯），打开设备蓝牙功能，搜索"U-Air "点击配对，配对成功后即可使用

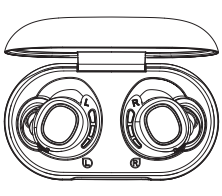

2）已有配对记录

打开设备蓝牙功能，开盒自动开机并回连设备，连接成功后即可使用

※请在5分钟内完成蓝牙配对，超时未完成耳机将自动关机。您需要将耳机放入盒内并关盒，重新操作请参照步骤（1）。

06 Q & A

Q: 耳机不能充电?
A: 充电时请盖上充电盒的盖子，并保持充电触点清洁。
Q: 为什么我的耳机不能开机?
A: 请重新充电并确保耳机有足够的电量，将耳机放入充电盒看耳机是否亮绿灯
Q: 其中一只耳机无声音?
A: 将两只耳机放回充电盒，合盖关机，再开盖开机，重新进行配对操作
Q: 无线耳机信号不好?
A: 蓝牙是一种短距离无线通讯技术，当我们说他能有10米的传输距离时，并不包括各种使用环境和特殊情况，请检查周围是否有电磁干扰。
Q: 为什么打电话时不能听到对方声音，或者听音乐?
A: 请确认如下几点:
1) 当你打电话时，请选择扬声器模式为"U-Air"。
2) 当有电话打入时，请双击耳机来接听。
3) 无线耳机的连接模式包括"手机音频"、"多媒体音频"，请在你手机上确认两个都被允许。
Q: 为什么耳机不能和我设备配对?
A: 请确认如下几点:
1) 请确认耳机是否有电并且进入了配对模式（左耳机白绿灯交替闪烁，右耳不闪灯）。

2) 请确认耳机是否已经连接上了别的设备，如果是，请断开连接并关闭该设备蓝牙。
3) 请确认耳机是否在设备10米范围内。
4) 如果以上步骤还是不能解决问题，请联系我们的售后服务。

1、注意

· 请根据当地法律法规使用此耳机。
· 请将耳机放置在儿童接触不到的地方，吞咽部分零件可能会导致窒息等严重后果。
· 请不要将耳机放置在过冷或者过热的地方，(0℃(32℉)以下, 高于45℃(113℉)),这可能会导致设备变形，减小设备充电电量，缩短使用寿命。、
· 请不要用很高的音量长时间使用，因为这会损伤你的听觉，请用适当的音量听音乐或打电话。
· 请至少一个月给此产品充一次电以延长产品电池寿命。
· 请使用5V/1A以上的适配器来给充电盒充电。
· 请知悉,产品如果长时间不用，电量会缓慢流失。

2、警告
本产品所用的电池如果使用不当，有可能导致火灾或化学灼伤。请根据当地的法规来处置电池。如果可能的话，请循环利用。不要将电池作为家庭垃圾处理或扔入火中。

3、保障
· 此保障包含任何生产制作技术上的缺陷问题。
· 此保障不包括因操作疏忽或不按说明书使用而导致的问题。
· 如果你有任何问题，请随时联系我们!

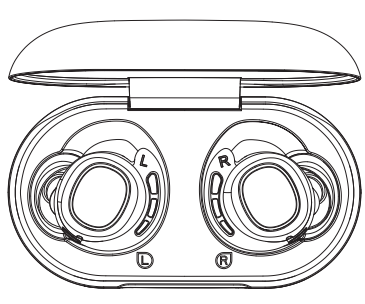

TWS U-Air

01 Product Overview

◎Earphone

①Ear-flag
②Charging contacts
③Ear-cap
④Touch sensing area
(function key;Lights when the touch is active)
⑤Indicator light
⑥Microphone

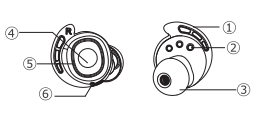

◎Charging box

①Charging box's lid
②Charging thimble
③Battery indicator
④Type-c charging port

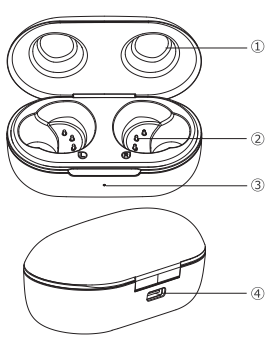

◎Specification

Product name : U-Air	Standby time : 70H
Support profile : HFP/HSP/A2DP	Earphone capacity :3 5mAh/3.7V
Bluetooth version : 5.0	Charging box capacity : 500mAh/3.7V
Transmission distance : ≧10m	Working time : 2.5-3H

02 Function & Operate

Function	Operate
Power on：	Auto power on by opening the charging box/Long touch function key for 5 seconds
Power off：	The earphone is turned off after the earphone is placed in the charging box and closed./Long touch function key for 5 seconds
Play/Pause：	Open music, touch the function key twice
Wake up Siri：	Long touch the function key for two seconds（standby）
Answer/hang up：	Touch the function key twice
Reject a call：	Long touch the function key for 2 seconds when call coming
Last song：	When playing music, touch the left ear function button three times
Next song：	When playing music, tap the right ear function button three times

03 How to charge

When using for the first time, it is recommended to fully charge the earphones before use.Please cover the lid when charging.

1)Charge the earphone
When the charging box charges the earphones, A. blue light flashes to represent 75%-100% power; B. blue/green light flashes same time to represent 35%-75% power; C. green light flashes to represent 0-35% power. When earphones are full, charge box automaticallyturns off the output.

2)Charge the charging box
Use the charging cable of the Type-c to connect the charging box and the power supply. When the adapter charges the charging box, A. blue light flashes to represent75%-100% power; B. blue/green light flashes to represent 35%-75% power; C. green light flashes to represent 0-35% power. When it is full, the blue light will be bright.

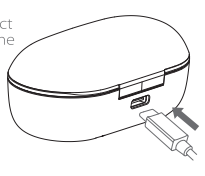

※Please use a 5V/1A power adapter

04 How to wear

05 How to match

1)first time using
Open the charging charging box, and the two earphones will be auto turned on and interconnected. After the connection is successful, the left earphone enters the pairing mode as the host of the binaural mode (the left earphone enters the blue and green lights alternately, and the right earphone does not flash)Open your phone bluetooth, search for "U-Air",click and connect.

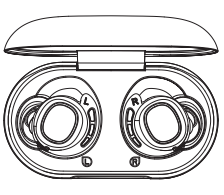

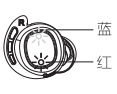

2)Already have a pairing record
Turn on your device's Bluetooth and earphone, and they will automatically connect without having to enter pairing mode.

※ Please complete the pairing within 5 minutes, otherwise the earphone will automatically shut down, you need to put the earphone back into the charging box. Please refer to step 1) for re-operation.

06 Q & A

Q: Why cant' my earphone be charged?.
A: Please cover the charging box's lid and keep the charging contact clean.
Q: Why can't my headset be powered on?
A: Please recharge and make sure the headset has enough power. Put the headset into the charging box to see if the headset is lit green.
Q: One of the headphones has no sound?
A: Put the two earphones back into the charging box and charge them for 5 minutes to reset and re-install them.
Q: The wireless headset's signal is not good?
A: Bluetooth is a short-range wireless communication technology. When we say that it has a transmission range of 10 meters, such range does not include all kinds of environment and special circumstances.Please check whether there is any electromagnetic interference around.
Q: Why can't I hear the other when I'm on the phone, or listening to music?
A: Please confirm the following points:
1) When you're on the phone, please select the speaker mode as "U-Air".
2) When there is a call in, please double-click the earphone to answer it.
3) The connection modes of this wireless headset include "mobile audio" and "multimedia audio". Please confirm that both are allowed on your mobile phone.
Q: Why can't the headset pair with my device?
A: Please confirm the following points:
1) Please confirm whether the headset is powered on and enters into the pairing mode (the right headphone is red and blue alternately flashing; and the left headphone is slowly flashing blue light).
2) Please confirm whether the headset has been connected to other devices. If so, please disconnect and close the Bluetooth of that device.

3)Please confirm whether the headset is within the range of 10 meters.
4)If the above steps cannot solve the problem, please contact our after-sales service.

1.Notes
- Please use this headset according to local laws and regulations.
- Please place the headset in places where children can't reach them. Swallowing some parts can result in severe consequences such as suffocation.
- Please don't place the headset in an extreme cold or heat (below 0 °C (32 °F) higher than 45 °C (113 °F)) place; it will lead to let this device have deformation, reduce its battery'scharging capacity and shorten its service life.
- Please don't keep in a high sound volume for long hours, as this will damage your hearing. Please listen to music or make phone calls at the lowest volume.
- Please charge this product at least one month to extend the battery life.
- Standard 5pin USB interface, please use the charger of 5V1A to charge the charging box.
- Please note that if the product is not used for a long time, the battery capacity will slowly drain away.

2.Warning
If the battery used in this product is not used properly, it may cause fire or chemical burns. Dispose of the battery in accordance with local regulations. If possible, please recycle. Do not dispose of the battery as household waste or throw it into the water.

3.Warranty
- This warranty covers any defects in production techniques.
- This warranty does not include problems caused by negligence or failure to follow this User Manual.
- If you have any questions, please feel free to contact us!

FCC Caution:

This device complies with part 15 of the FCC Rules. Operation is subject to the following two conditions: (1) This device may not cause harmful interference, and (2) this device must accept any interference received, including interference that may cause undesired operation.

Any Changes or modifications not expressly approved by the party responsible for compliance could void the user's authority to operate the equipment.

Note: This equipment has been tested and found to comply with the limits for a Class B digital device, pursuant to part 15 of the FCC Rules. These limits are designed to provide reasonable protection against harmful interference in a residential installation. This equipment generates uses and can radiate radio frequency energy and, if not installed and used in accordance with the instructions, may cause harmful interference to radio communications. However, there is no guarantee that interference will not occur in a particular installation. If this equipment does cause harmful interference to radio or television reception, which can be determined by turning the equipment off and on, the user is encouraged to try to correct the interference by one or more of the following measures:

-Reorient or relocate the receiving antenna.

-Increase the separation between the equipment and receiver.

-Connect the equipment into an outlet on a circuit different from that to which the receiver is connected.

-Consult the dealer or an experienced radio/TV technician for help.

The device has been evaluated to meet general RF exposure requirement. The device can be used in portable exposure condition without restriction.