GURUGEAR™

the path to happiness.

OWNER'S MANUAL

GuruGear 2.45" UHD 4K Touch Screen Wi-Fi Action Camera

MODEL NO .: NOXPM

Made In China

Introduction

Action Camera is a high-definition digital motion video recording device, created to reach market demand. It has a wide variety of the leading features for digital video recording, photo shooting, audio recording with screen display and detachable battery. Best suitable for vehicle recording, outdoor sports, home security, diving and more related activities. Allowing you to enjoy the moments while capturing every scene anytime, anywhere.

Warning

1. Keep it safe from falling and dropping.
2. Keep it distant from any strong magnetic interference objects like an electrical machine to avoid strong radio waves that might be damaging the product and affect the sound or image quality.
3. Don’t expose the product directly to high temperatures and strong sunlight.
4. We recommend using a high quality Micro SD Card for the best results.
5. Don’t place your Micro SD card near strong magnetic objects to avoid data error.
6. In case of overheating, unwanted smoke, or unpleasant smell from the device, unplug it immediately from the power outlet to prevent hazardous fire.

7. Keep it safety from children while charging.
8. Store the device in a cool, dry, and dust free location.

Product Features

1. With a water proof case, it allows you to film 30 meters under water scene.
2. 2.45 inch HD screen display for convenient videos and image playback.
3. 1000MAH removable battery, easy to replace the battery, safe and durable, longer life.
4. 7 glass A+ 170°high precision lens.
5. HD 12M pixel wide angle lens .
6. Support the highest 64G storage card.
7. Kinds of video recording format 4K30, 2K60,1080P120, 720P240.
8. MP4 format video recording, H.264/H.265 compression format.
9. Consecutive pictures, compressed video, video photo and other slow shooting modes.
10. Proprietary underwater shooting mode.
11. 6 Axis gyroscope anti-shake Technology HDR Photo.
12. Super WIFI, APP Internet, can share the wonderful picture in real time.
13. Dual channel stereo sound, listen to the most clear voice.

Camera Illustration

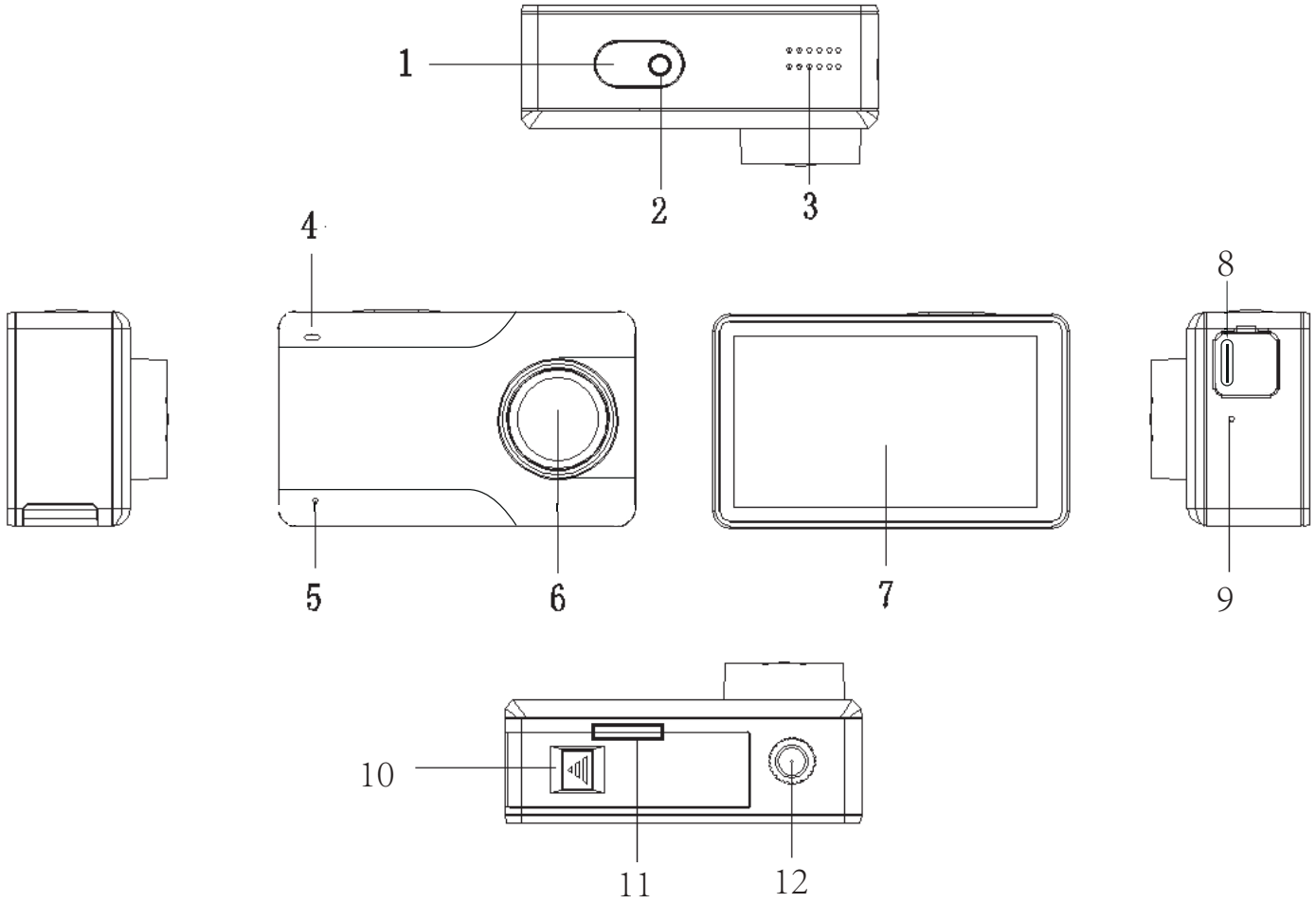

1. Shutter/ON/OFF
2. Video Indicator
3. Speaker
4. Work Indicator
5. MIC
6. Camera
7. Screen
8. Type-C
9. MIC
10. Battery switch
11. SD card slot (need to open the battery compartment)
12. Self timer or a three tripod interface

Waterproof case

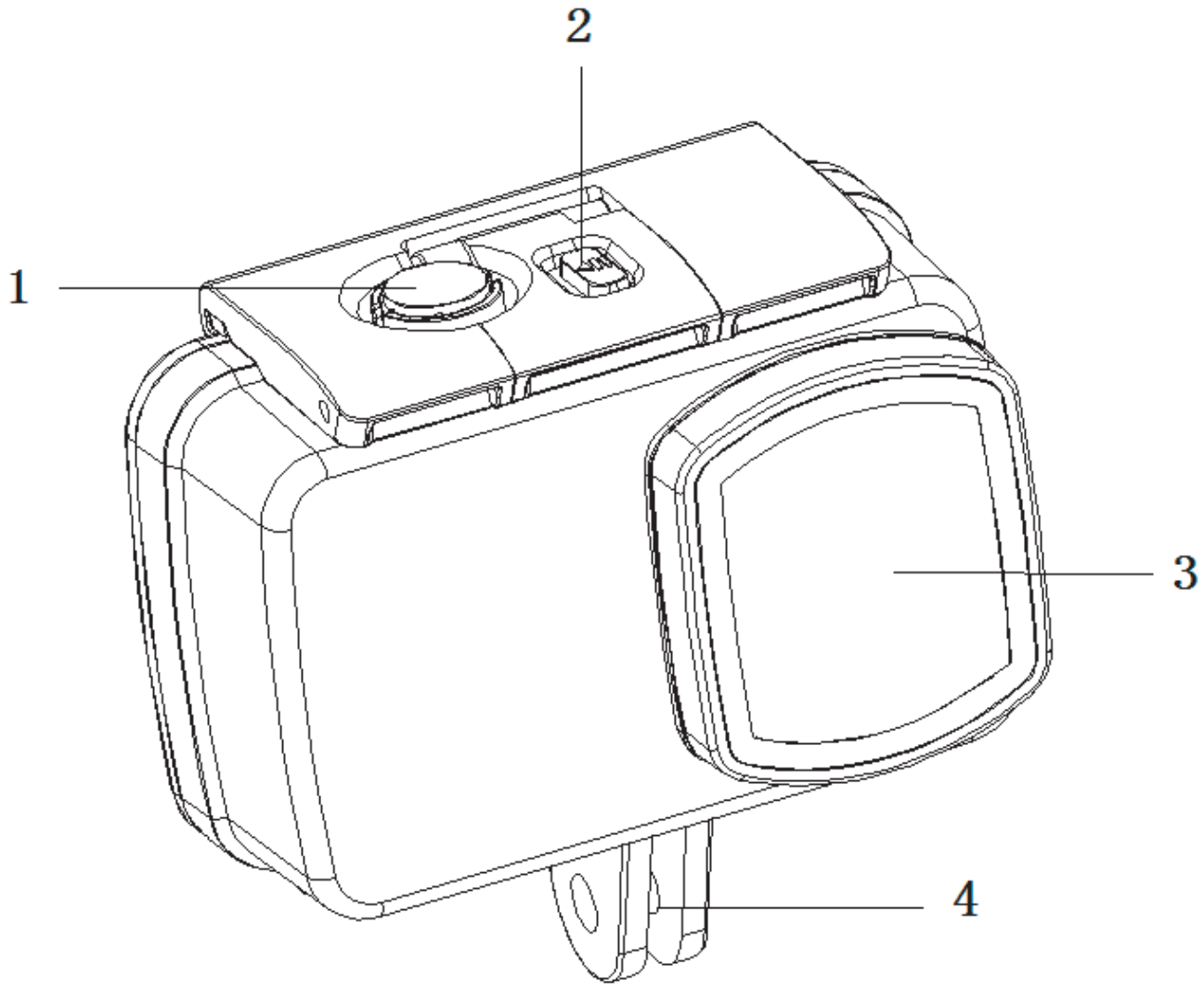

1. Shutter/ON/OFF
2. Case security lock
3. Camera
4. Bracket buckle

Operation

1. Installing Micro SD Card

A. In accordance with the direction of the arrow battery cover, open the battery cover, and insert the SD card card into the card slot.

B. Note: Please choose a branded Micro SD card, and then format it with the computer before use. We suggest a high quality SD card for the perfect result.

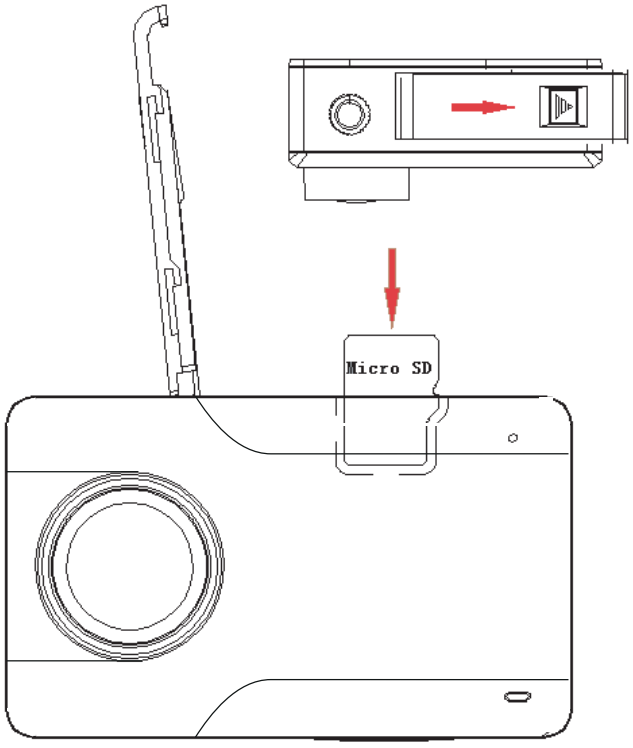

2. Installing and removing the batteries

A. Press the switch of the battery, and the battery cover in the direction of the arrow, slide the battery cover, a battery cover can be opened up.

B. The battery is installed and removed in accordance with the positive and negative signs and arrows indicated on the battery.

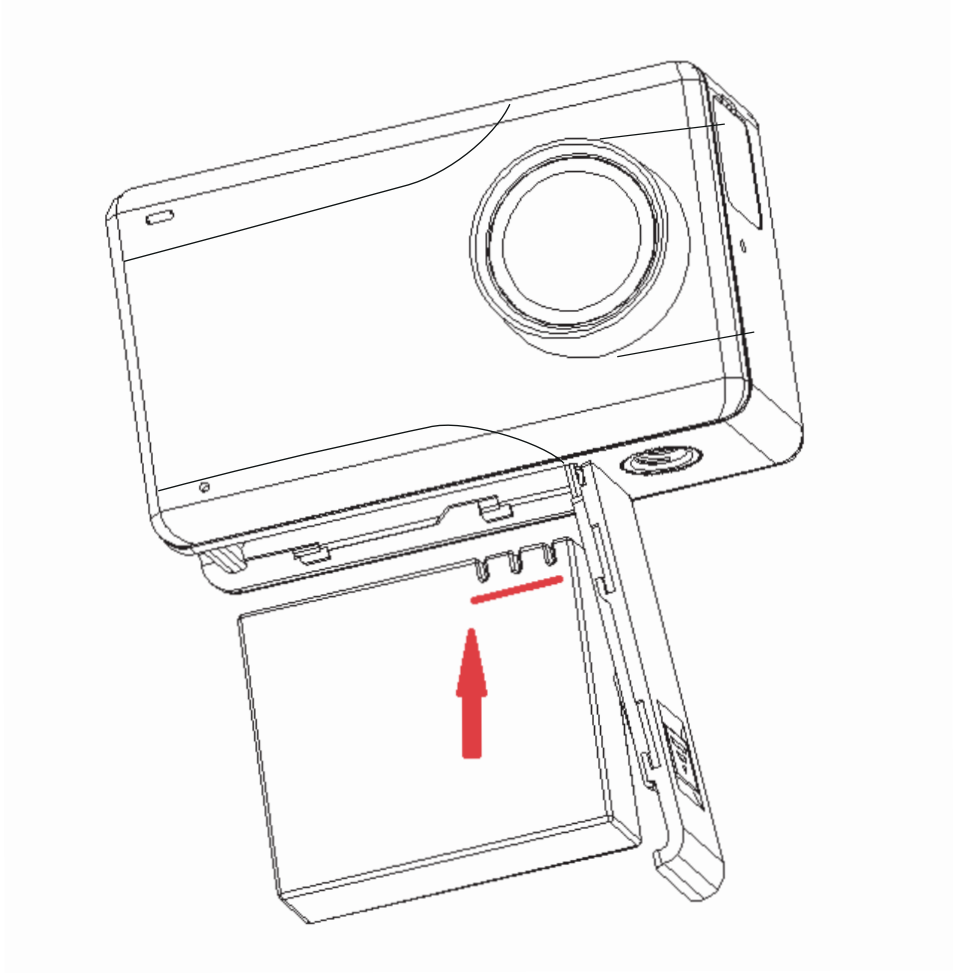

3. Charging

A. You can recharge this Action Camera by connecting it directly to the computer or with the power adapter.

B. Action Camera can record the video while charging (Switch to Vehicle-mounted Mode in the “Menu”).

C. The camera can be charged even when the power is switch off.

D. The Action Camera will automatically charge until full. When charging, you can see the status indicator light up. Once fully charged, the indicator will be turned off.

4. Switching the camera on and off

A. Press and hold the ON/OFF switch for 1 second to turn it on.

B. Press and hold the ON/OFF switch for 3 seconds to turn it off.

5. Mode Change

A. At the Main Interface, touch the bottom of the screen to access the recording mode interface.

NormalVideo	VideoLapse	SlowRec
NormalPhoto	PhotoLapse	BurstMode
CarMode	TimerPhoto	Video+Photo

6. Menu setting

A. Select the shooting mode, click on the lower right corner of the screen settings Icon , you can enter the menu settings.

B. In the menu, settings can be set on the shooting mode in different modes, and menu options will be different.

C. Shooting mode menu: resolution, color, white balance, exposure settings.

D. System menu: time settings, language, screen protection, formatting, etc.

7. Photo shooting mode

A. In the shooting mode, select the photo mode, press the shutter button to take pictures.

8. Video recording mode

A. Choose the video mode in shooting mode, press the shutter button for recording, press the shutter button again, you can stop the video.

B. Video indicator 2, will be flashing.

9. Playback

A. In the bottom left corner of the screen, click on the replay icon ▶, you can review your pictures and videos in this mode.

10. Date storage

A. Using Micro USB data cable, the date files will be copied to the computer to play, or you can also take the Micro SD out, and use the card reader to read the image data.

1. Shortcut key mode

A. Boot, slide down from the screen, there will be a shortcut menu, you can quickly operate.

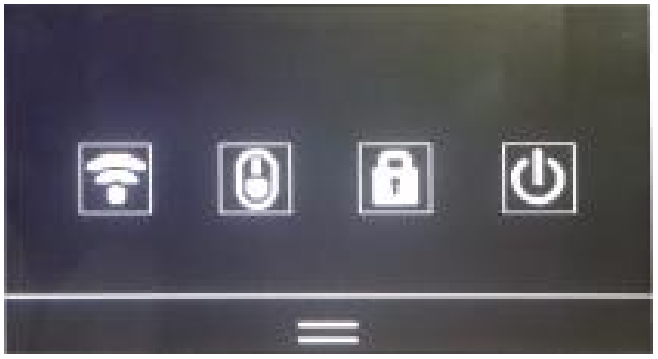

12. WIFI connection

A. Install the “YUTUPRO” App on your phone/tablet (Android system can be searched on the Google Play and download. Apple's system can be downloaded from the APPStore, the china mainland market. Android users can search in the application treasure load).

B . Open the camera, open the WIFI, the camera screen will display the WIFI logo, and then appear 4K Sports DV_..... .....

C . On the phone or tablet PC, to open the WIFI function, in the settings, search and connect 4K Sports DV..... ,The initial password is: 12345678; after the connection is successful, the camera screen will display WIFI connection ready.

D . After the success of the connection, which can be on the phone or tablet PC, open the APP "YUTUPRO" for the corresponding operation or image sharing.

E . WIFI indicator light

WIFI application and connecting the camera and mobile device

iOS

Android

Specifications

CPU	Hisilicon3559
Sensor	Sony IMX 377
Lens	170°A+High resolution wide angle
Screen	2.45 inch LCD touch screen
Video/Compression format	MP4/H.265
Video resolution	4k (3840*2160) 30FPS / 2K(2560*1440)60FPS 1080P(1920*1080) 120/60FPS 720P(1280*720)240/120/60FPS / VGA(640*480)240FPS
Picture format	JPG
Picture resolution	16M/14M/12M/10M/8M/5M/3M/2M
Visual angle	Standard / wide / narrow angle
Storage format	Micro SD card, maximum support 64G
USB	Micro 5pin 2.0USB
Waterproof depth	30M
Audio frequency	stereo
Battery	3.7V/1000mAh
Battery autonomy	85Minutes
Measurement	64*40*30mm
Weight	88g
Video mode	Video/Time-lapse/Slow motion
Photo mode	Photo/ Photo lapse/Sequence/Video+Photo
Operating system	Windows XP /Mac OS
Language	English/French/German/Spanish/Italian/Portuguese/Simple Chinese/Japanese/Traditional Chinese/ Russian

Note: Specifications may be upgraded, updated, and other reasons to make changes in order to prevail in kind.

FCC Statement

This equipment has been tested and found to comply with the limits for a Class B digital device, pursuant to part 15 of the FCC Rules. These limits are designed to provide reasonable protection against harmful interference in a residential installation. This equipment generates, uses and can radiate radio frequency energy and, if not installed and used in accordance with the instructions, may cause harmful interference to radio communications. However, there is no guarantee that interference will not occur in a particular installation. If this equipment does cause harmful interference to radio or television reception, which can be determined by turning the equipment off and on, the user is encouraged to try to correct the interference by one or more of the following measures:

- Reorient or relocate the receiving antenna.
- Increase the separation between the equipment and receiver.
- Connect the equipment into an outlet on a circuit different from that to which the receiver is connected.
- Consult the dealer or an experienced radio/TV technician for help.

Caution: Any changes or modifications to this device not explicitly approved by manufacturer could void your authority to operate this equipment.

This device complies with part 15 of the FCC Rules. Operation is subject to the following two conditions: (1) This device may not cause harmful interference, and (2) this device must accept any interference received, including interference that may cause undesired operation.

RF Exposure Information

The device has been evaluated to meet general RF exposure requirement. The device can be used in portable exposure condition without restriction.

Distributed by
Bluestem Brands Inc.,
7075 Flying Cloud Drive, Eden
Prairie, MN 55344
Tel: 1-800-208-2500
(Monday - Friday 8:00am - 8:00pm Central time)

GURUGEAR™

the path to happiness.