DX-SMART

DX-BT24-S

MODULE SPECIFICATION

Version：2.2

Date：2022-01-06

Update record

Version	Date	Illustrate	Author
V2.1	2018/10/1	initial version	DL
V2.2	2022/01/06	new version	DL

Contact Us

Shenzhen DX-SMART Technology Co., Ltd.

Email：sales@szdx-smart.com

Tel：0755-29978125

Web：www.szdx-smart.com

Add：Room 601, Block A1, Huafeng Zhigu, Hangkong Road, Baoan District, Shenzhen

Contents

1. Introduction - 5 -
1.1. Overview - 5 -
1.2. Key Features - 5 -
1.3. Application - 6 -
1.4. Block Diagram - 6 -
1.5. Basic Parameters - 7 -
2. Application Interface - 7 -
2.1. Module Pin Definition - 7 -
2.2. Pin Definition Description - 8 -
2.3. Operating Mode - 9 -
2.4. Energy-saving Mode - 10 -
2.4.1. Low Power Mode - 10 -
2.4.2. Hibernation Mode - 10 -
2.5. Power Design - 11 -
2.5.1. Power Interface - 11 -
2.5.2. Power Supply Stability Requirements - 11 -
2.5.3. Power Down Requirements - 12 -
2.5.4. RST Reset Pin Description - 12 -
2.5.5. KEY Pin Definition - 14 -
2.6. Hardware Physical Interface - 15 -
2.6.1. UART Interface - 15 -
2.6.2. Universal Digital IO Port - 16 -
2.6.3. I2C Interface - 16 -
2.6.4. Analog-to-digital Converter（ADC） - 16 -
2.7. Reference Connection Circuit - 17 -
3. Electrical Characteristics & Reliability - 18 -
3.1. Maximum Rating - 18 -
3.2. Working And Storage Temperature - 19 -
3.3. Power Consumption - 19 -
3.4. RF Characteristics - 20 -
3.5. Static Protection - 20 -
4. Mechanical Size And Layout Recommendations - 20 -
4.1. Module Mechanical Size - 21 -
4.2. Recommend Encapsulation - 22 -
4.3. Module Top View & Bottom View - 22 -
4.4. Hardware Design Layout Recommendations - 23 -
5. Patch Requirements - 24 -
5.1. Storage Conditions - 24 -
5.2. Module Baking Treatment - 24 -
5.3. Reflow Soldering - 25 -

5.4. Packing Specification ..... - 26 -

Table index

Table 1 : Basic parameter table ..... - 7 -
Table 2 : Pin definition description table ..... - 8 -
Table 3 : Work mode table ..... - 9 -
Table 4 : Power interface pin definition table ..... - 11 -
Table 5 : RST pin definition table ..... - 12 -
Table 6 : RST pin definition ..... - 13 -
Table 7 : KEY Pin definition table ..... - 14 -
Table 8 : KEY pin function definition table ..... - 14 -
Table 9 : Absolute maximum rating table ..... - 18 -
Table 10 : Working voltage table ..... - 19 -
Table 11 : Working and storage temperature table ..... - 19 -
Table 12 : Power consumption table ..... - 19 -
Table 13 : RF characteristics table ..... - 20 -
Table 14 : Table of ESD withstand voltage of module pins ..... - 20 -
Table 15 : Recommended reflow soldering temperature ..... - 26 -

Picture index

Figure 1 : Functional block diagram ..... - 6 -
Figure 2 : Module pin definition ..... - 8 -
Figure 3 : Energy-saving mode control diagram ..... - 11 -
Figure 4 : Burst transmission power supply requirements ..... - 12 -
Figure 5 : powered reference circuit ..... - 12 -
Figure 6 : Reset reference circuit ..... - 13 -
Figure 7 : Key reset reference circuit ..... - 13 -
Figure 8 : Open-collector drive wake-up reference circuit ..... - 14 -
Figure 9 : Key reset reference circuit ..... - 15 -
Figure 10 : IIC communication sequence diagram ..... - 16 -
Figure 11 : Typical application circuit ..... - 17 -
Figure 12 : Reference circuit for serial port level conversion ..... - 18 -
Figure 13 : Module top and side dimension drawing ..... - 21 -
Figure 14 : Bottom view size of the module ..... - 21 -
Figure 15 : Recommended package dimensions ..... - 22 -
Figure 16 : Top and bottom views of the module ..... - 22 -
Figure 17 : Reference position for module placement ..... - 23 -
Figure 18 : Recommended reflow soldering temperature profile ..... - 26 -
Figure 19 : Pallet size (unit: mm) ..... - 27 -
Figure 20 : Packing box size (unit: mm) ..... - 27 -

1. Introduction

1.1. Overview

DX-BT24-S Bluetooth module is built by Shenzhen DX-SMART Technology Co., Ltd. for intelligent wireless data transmission, It uses the DIALOG 14531 chip and follows the Bluetooth BLE 5.1 specification. Support AT commands, users can change the serial port baud rate, device name and other parameters according to their needs, flexible to use。This module supports UART, I2C and other interfaces, supports IO port control, ADC acquisition, It has the advantages of low cost, low power consumption, high receiving sensitivity, etc, Only a few peripheral components are required to realize its powerful functions, and various projects can be customized and developed according to customer needs.

1.2. Key Features

- DIALOG 14531 main control chip
- Bluetooth BLE 5.1
- Power consumption can be as low as 2 uA
- Slave module Visible distance 90 M
- Master module Visible distance 20M
- Transmission rate 10K Byte/s
- Optional on-board antenna or external antenna
- Working temperature -40-+85 ℃
- Support UART, IIC, GPIO hardware interface
- Optional iBeacon mode program
- Optional direct drive mode program
- Optional single master mode program
- Optional one-master multi-slave mode program
- Customizable Bluetooth gateway

1.3. Application

- Smart home
- Smart education equipment
- Medical equipment monitoring and wireless control
- Measurement and monitoring system
- Industrial sensors and controls
- Tracking and positioning

1.4. Block Diagram

The following figure shows the functional block diagram of the DX-BT24-S Bluetooth module，Explains the following main functions：

- Power section
- Baseband part
- Memory
- RF part
- Peripheral interface

Figure 1：Functional block diagram

1.5. Basic Parameters

Table 1: Basic parameter table

Parameter	Details	Parameter	Details
Chip model	DA14531	Module model	DX-BT24-S
Bluetooth specifications	BLE 5.1	Module size	14.5(L) x 12 (W) x 2.2(H) mm
Operating Voltage	3.3V	Working current	270 uA
protocol	GATT，ATT，GAP	MTU value	253 bytes
Sensitivity	-94dBm@0.1%BER	Transmit power	-19.5~+2.5dBm
Modulation	GFSK	Frequency band	2.402GHz -2.480GHz ISM band
RF input impedance	50Ω	Frequency hopping and channel	1600hops/s 2MHz space 40 channels
Antenna interface	Onboard antenna / external antenna (optional)	Hardware interface	UART I2C GPIO
Operating temperature	MIN:-40℃ - MAX:+85℃	Humidity	10%-95% non-condensing

2. Application Interface

2.1. Module Pin Definition

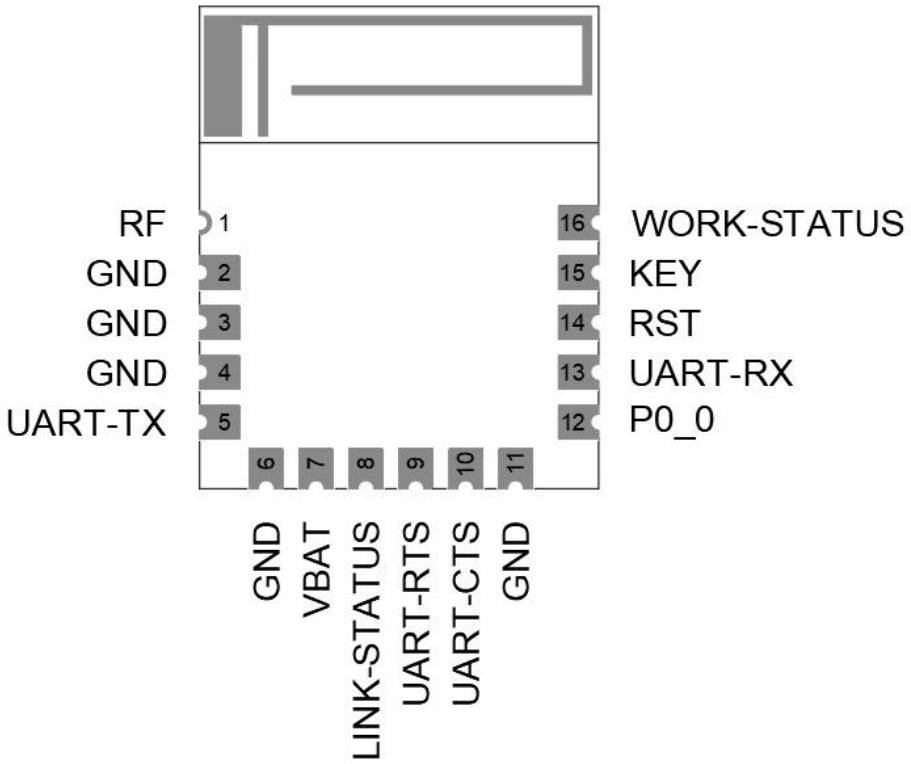

Figure 2: Module pin definition

2.2. Pin Definition Description

Table 2: Pin definition description table

Pin number	Pin name	Pin function	illustrate
1	RF	External antenna pin	
2,3,4,6,11	GND	Power Ground	
5	UART-TX	Serial data output	Corresponding chip P0_6 pin
7	VBAT	Power input pin	3.3V(Typical value)
8	LINK-STATUS	Bluetooth connection status pin	Not connected: Output low level Connection Status: Output high level Corresponding chip P0_11 pin
9	UART-RTS /SWDIO	UART request to send, active low/debug data port	Programmable input/output line Corresponding chip P0_10 pin
10	UART-CTS /SWCLK	UART clear to send, active low/debug clock port	Programmable input/output line Corresponding chip P0_2 pin

12	P0_0	NC		Corresponding chip P0_0 pin
13	UART-RX	Serial data input		Corresponding chip P0_7 pin
14	RST	Reset		
		Wake up from hibernation mode		For details, please refer to 2.5.4
				Corresponding chip P0_5 pin
15	KEY	Disconnect pin		For details, please refer to 2.5.5
		Low power mode wake up		For details, please refer to 2.5.5 Corresponding chip P0_9 pin
		Enter pairing mode		For details, please refer to 2.5.5
16	WORK-STATUS	Module working status pin	Slave module	Not connected: 1s high 1s low Connection Status：3s high 50ms low Always low in low power consumption and hibernation mode Corresponding chip P0_8 pin
			Maser module	Searching and connecting: 300ms high 300ms low Connection status: always high

2.3. Operating Mode

Table 3：Work mode table

mode	Function
Normal working mode	All functions and peripheral interfaces can be used normally
Low power mode	When not connected, Only open broadcast, all peripheral interfaces are closed
	In the connected state, all functions and peripheral interfaces can be used normally
Hibernation mode	All running RAM blocks of the module are closed, and only the tick clock inside the chip is reserved for wake-up. Broadcasting and all peripheral interfaces are closed

2.4. Energy-saving Mode

2.4.1. Low Power Mode

When the host and the module are connected through the serial port, the module can enter the low power consumption mode through the following steps;

- Use AT+PWRM command to enable low power consumption function. For more information about AT commands, Please refer to "DX-BT24&BT24-S&BT24-PA Bluetooth Module_Serial UART_Application Guide".
- In low power consumption mode, the module can be found and connected.
- Send a 200ms low-level pulse to the 15-pin KEY of the module to wake up the module to normal working mode.
- To enter low power mode again:
  When connected: disconnected, the module automatically enters low power consumption mode;
  When it is not connected after waking up: You need to send the AT+PWRM command again to enter the low power consumption mode or reset, power off and restart to enter.
- For hardware, please refer to 2.5.5 wake-up circuit below.

2.4.2. Hibernation Mode

When the host and the module are connected through the serial port, the module can enter the hibernation mode through the following steps;

- Use the AT+PWRM command to enable the hibernation function. For detailed information about the AT command, Please refer to "DX-BT24&BT24-S&BT24-PA Bluetooth Module_Serial UART_Application Guide".
- In hibernation mode, the module cannot be found and connected.
- Send a 200ms low-level pulse to the 14-pin reset pin to reset and wake up the module to normal working mode.
- After waking up, if you need to enter the hibernation mode again, you need to send the AT+PWRM command;
- For hardware, please refer to 2.5.4 reset circuit below.

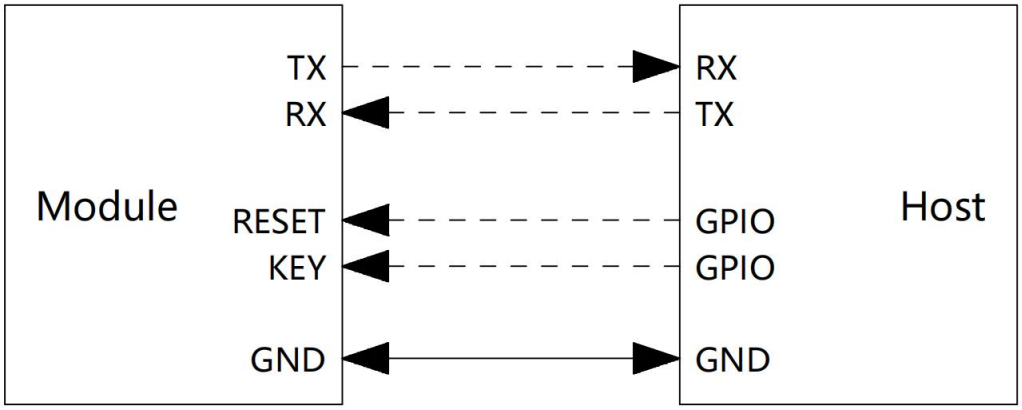

Figure 3: Energy-saving mode control diagram

2.5. Power Design

2.5.1. Power Interface

Power interface pin definition

Table 4: Power interface pin definition table

Pin name	Pin number	describe	Minimum	Typical value	Max	unit
VBAT	7	Module power	2.8	3.3	3.6	V
GND	2,3,4,6,11	Land	-	0	-	V

2.5.2. Power Supply Stability Requirements

The power supply range of DX-BT24-S is 2.8~3.6V. It is necessary to ensure that the input voltage is not lower than 2.8V. The following figure shows the voltage drop of VBAT during radio frequency burst transmission.

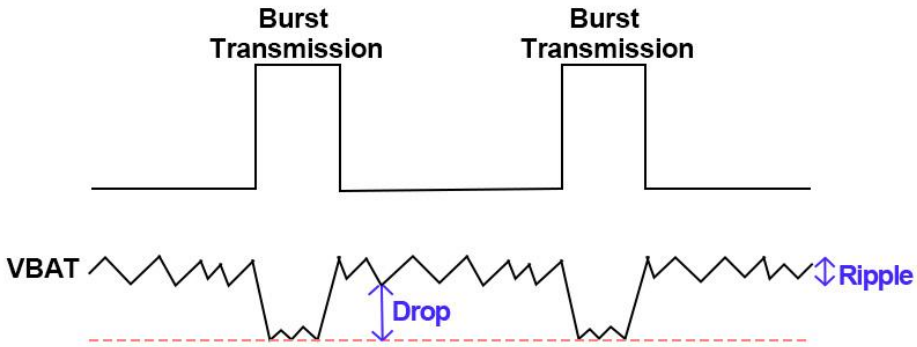

Figure 4: Burst transmission power supply requirements

In order to reduce the voltage drop, it is recommended to reserve 2 (22uF, 0.1uF) chip multilayer ceramic capacitors (MLCC) with the best ESR performance for VBAT, and the capacitors should be placed close to the VBAT pin. The reference circuit is as follows:

Figure 5: powered reference circuit

2.5.3. Power Down Requirements

Since the working current of the chip of this module is very low, when the power is disconnected, if the IO port of the peripheral MCU has a weak current supplying the module, the module is likely to be in an abnormal working state at this time, so after disconnecting the power of the module, the MCU is connected to the module All IO ports must be configured as pull-down.

2.5.4. RST Reset Pin Description

Table 5: RST pin definition table

Pin name	Pin number	I/O	describe	Remark
RST	14	DI	Module reset	Active low ; NC if not used

Table 6: RST pin definition

Module status	Method of operation	Result
Hibernation	Pull down the RST pin for at least 200ms and then release	Reset wake
Other status	Pull down the RST pin for at least 200ms and then release	Reset

Remark

The RST signal is more sensitive to interference, so it is recommended that the trace should be as short as possible, and it needs to be handled with ground.

Figure 6: Reset reference circuit

Figure 7: Key reset reference circuit

2.5.5. KEY Pin Definition

Table 7: KEY Pin definition table

Pin name	Pin number	I/O	describe	Remark
KEY	15	DI		

Table 8: KEY pin function definition table

Program	State	Method of operation	result
Slave module	Connection Status	Pull down the KEY pin for at least 200ms and then release	disconnect
	Low power state	Pull down the KEY pin for at least 200ms and then release	wake
	standby mode	Pull the KEY pin low for at least 100ms (can be released after being connected)	pairing mode
Master module	Connection Status	Pull down the KEY pin for at least 200ms and then release	disconnect
	standby mode	Pull down the KEY pin for at least 200ms and then release	Clear memory address code

Remark

Pairing mode: After the slave module enters pairing mode, after the search mode of the master module is set to pairing mode, the master module will automatically connect to the slave module.This pairing mode is only valid for our main module.

2.6. Hardware Physical Interface

2.6.1. UART Interface

Four signal pins are used to realize UART function. When DX-BT24-S is connected to another digital device, UART_RX and UART_TX transfer data between the two devices. The remaining two pins, UART_CTS and UART_RTS, can be used to implement RS232 hardware flow control, and they are both active at low level, that is, transmission is allowed at low level, and transmission is stopped at high level.

Possible UART settings		
parameter	**probable value**	
BAUD	minimum	2400baud（≤1%Error）
	standard	9600baud（≤1%Error）
	maximum	115200baud（≤1%Error）
flow control		RTS/CTS，or none
Parity check		None, odd or even
Number of stop bits		1/2
Number of bits per channel		8

2.6.2. Universal Digital IO Port

Five general digital IO ports are defined in the module. All these IO ports can be configured through software to realize various functions, such as button control, LED drive or interrupt signal of the main controller, etc. Keep floating when not in use

2.6.3. I2C Interface

- Two-wire I2C serial interface composed of serial data line (SDA) and serial clock (SCL)
- Support two speeds

  standard mode 0-100Kbit/s

  Fast mode ≤400Kbit/s

- 32-position sending and receiving FIFO depth (32x8-bit Rx & 32x 10-bit Tx)
- Support 7-bit and 10-bit addressing mode and regular call addressing mode.

The I2C interface is an internal circuit that allows communication with an external I2C interface. The external I2C interface is an industry standard two-wire serial interface for connecting external hardware. These two serial lines are called serial data line (SDA) and serial clock line (SCL). The I2C module provides two data transmission rates: 100kHz in standard mode and 400kHz in fast mode. The I2C module also has an arbitration detection function to prevent multiple hosts from attempting to transmit data to the I2C bus at the same time.

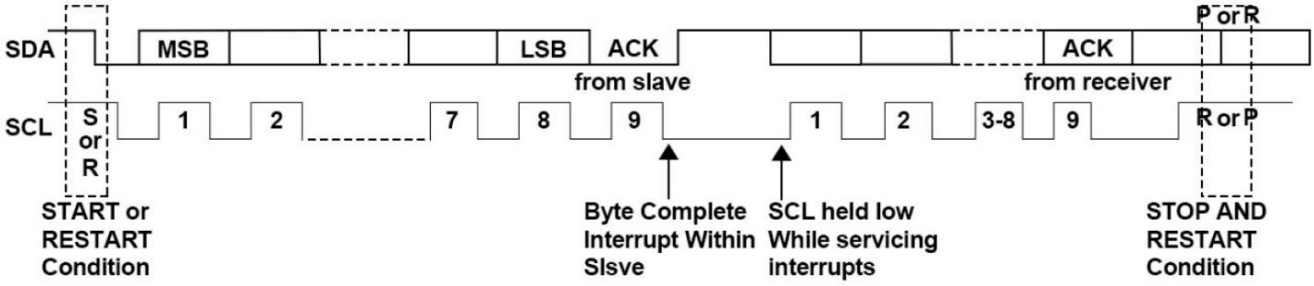

Figure 10: IIC communication sequence diagram

2.6.4. Analog-to-digital Converter (ADC)

- Typical 10-bit dynamic ADC of 125 ns
- Maximum sampling rate was 1 Msample/s

- Ultra-low power consumption (20 uA Typical power supply current, 100 ksample/s)
- Configurable attenuator: 1x, 2x,3x, 4x

The device integrates a 10-bit high-speed and ultra-low-power general-purpose analog-to-digital converter (ADC). It can operate in unipolar (single-ended> mode and bipolar (differential) mode. ADC has its own 0.9v regulator (LDO), which represents the full-scale reference voltage

3. Electrical Characteristics & Reliability

3.1. Maximum Rating

The absolute maximum ratings of the supply voltage and voltage on the digital and analog pins of the module are listed below. Exceeding these values will cause permanent damage. The average GPIO pin output current is defined as the average current value flowing through any corresponding pin in a 100mS period. The total average GPIO pin output current is defined as the average current value flowing through all corresponding pins in a 100ms period. The maximum output current is defined as the peak current value flowing through any corresponding pin.

Table 9: Absolute maximum rating table

Absolute maximum rating			
parameter	**Minimum**	**Max**	**unit**
V_{IN}- I/O power supply voltage (VDDIO)	-0.1	+3.6	V
V_{IN}- Analog digital power/voltage (VDD)	-0.1	+3.6	V

Table 10: Working voltage table

Operating Voltage				
parameter	**Minimum**	**Typical**	**Max**	**unit**
V_{IN}- Core supply voltage (VDD)	2.8	3.3	3.6	V
V_{IN}- I/O power supply/voltage (VDDIO)	2.8	3.3	3.6	V

3.2. Working And Storage Temperature

Table 11: Working and storage temperature table

parameter	Minimum	Typical	Max	unit
Normal working temperature	-40	-	85	ºC
storage temperature	-50	-	150	ºC

3.3. Power Consumption

Table 12: Power consumption table

mode	state	Current	Unit
Hibernation mode	-	2	uA
Low power mode	not connected	19	uA
	connected	341	uA
Normal working mode	not connected	270	uA
	connected	341	uA
When transparently transmitting data	connected	MIN: 341uA MAX: 986uA	MIN is the power consumption when not sending data MAX is the power consumption when the data volume sent by the module is 10626bytes/s

Remark

The power consumption in the above table is measured at a broadcast interval of 540ms, for reference only. The power consumption of this module in different broadcast intervals is different, the specific power consumption is subject to the actual.

3.4. RF Characteristics

Table 13: RF characteristics table

Function	Value
BLE transmit power	-19.5 ~2.5dBm
BLE sensitivity	-94dBm@0.1%BER

3.5. Static Protection

In the application of the module, due to the static electricity generated by human body static electricity and charged friction between microelectronics, it is discharged to the module through various ways, which may cause certain damage to the module, so ESD protection should be taken seriously. In the process of R&D, production, assembly and testing, especially in product design, ESD protection measures should be taken. For example, at the interface of the circuit design and the points that are easily damaged or affected by electrostatic discharge, anti-static protection should be added; anti-static gloves should be worn during production.

Table 14: Table of ESD withstand voltage of module pins

Test interface	Contact discharge	Air discharge	unit
VBAT & GND	+4	+8	kV
Main antenna interface	+2.5	+4	kV

4. Mechanical Size And Layout Recommendations

This section introduces the mechanical dimensions of the module, all dimensions are in millimeters; for all tolerances that are not marked, the tolerance is ±0.3 mm

4.1. Module Mechanical Size

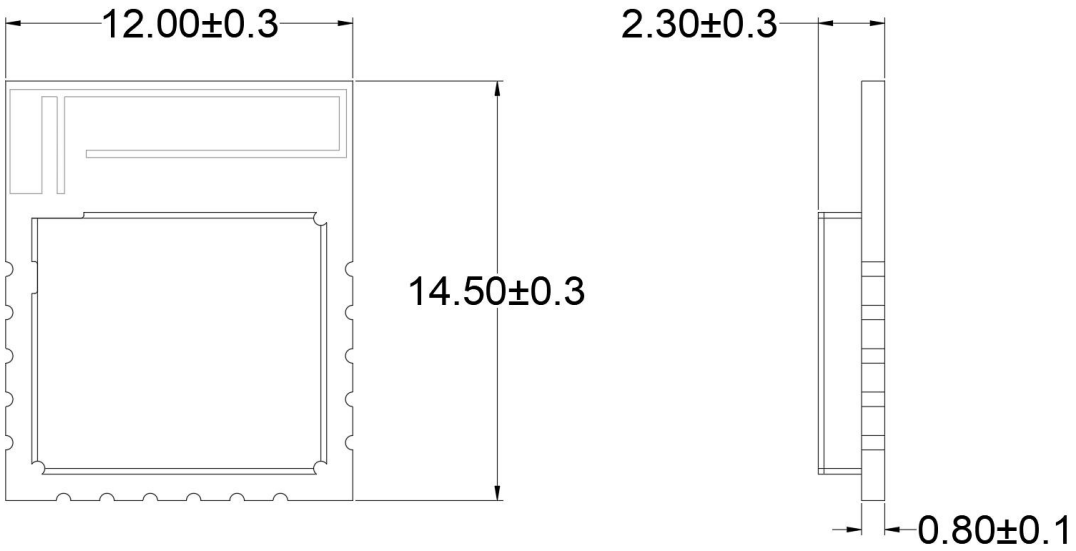

Figure 13: Module top and side dimension drawing

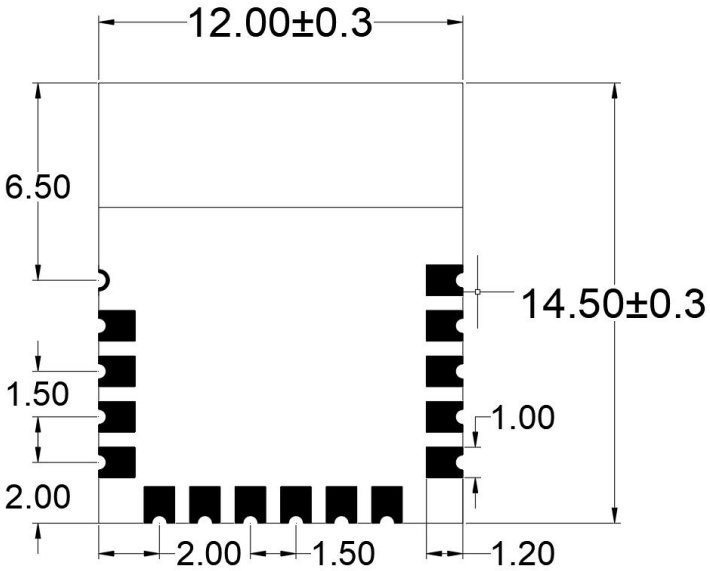

Figure 14: Bottom view size of the module

4.2. Recommend Encapsulation

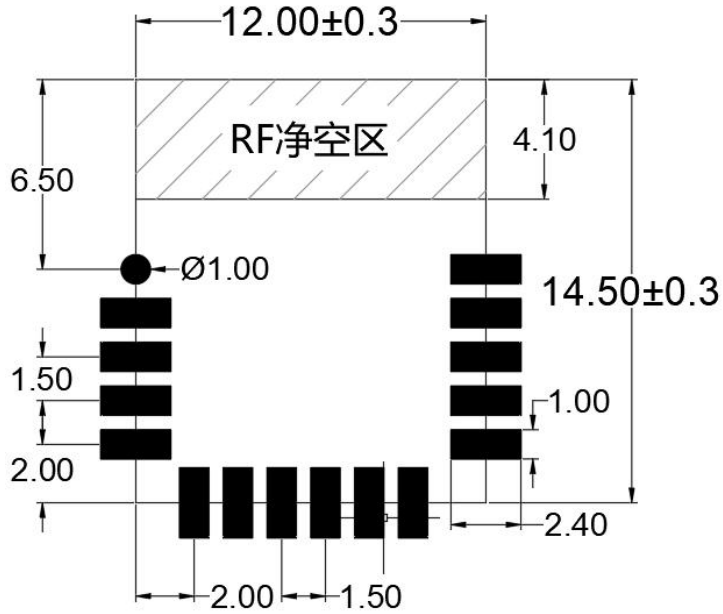

Figure 15: Recommended package dimensions

4.3. Module Top View & Bottom View

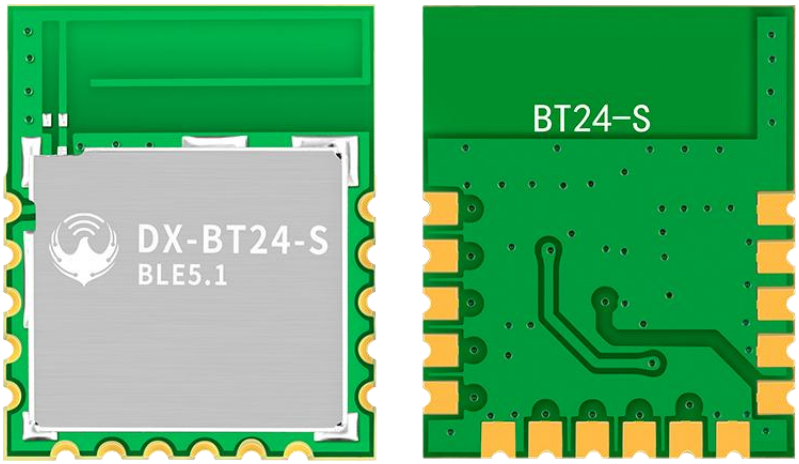

Figure 16: Top and bottom views of the module

Remark

The above picture is for reference only. For the actual product appearance and label information, please refer to the actual module.

4.4. Hardware Design Layout Recommendations

The DX-BT24-S Bluetooth module works in the 2.4G wireless frequency band and uses an on-board antenna. The standing wave ratio (VSWR) and efficiency of the antenna depend on the placement of the patch. Various factors should be avoided as far as possible to the wireless signal transmission and reception. Pay attention to the following What time is it:

1、Avoid using metal for the product shell surrounding the Bluetooth. When using a part of the metal shell, try to keep the antenna part of the module away from the metal part.The metal connecting wire or metal screw inside the product should be as far away as possible from the antenna part of the module。

2、The antenna part of the module should be placed against the edge of the carrier board PCB or directly exposed to the carrier board, and it is not allowed to be placed in the middle of the board，There is at least 5mm of free space in the antenna direction, and the carrier board under the antenna is milled out. Copper and wiring are not allowed in the direction parallel to the antenna。

3、It is recommended to use insulating material to isolate the module mounting position on the substrate, for example, put a whole piece of silk screen at this position（TopOverLay）

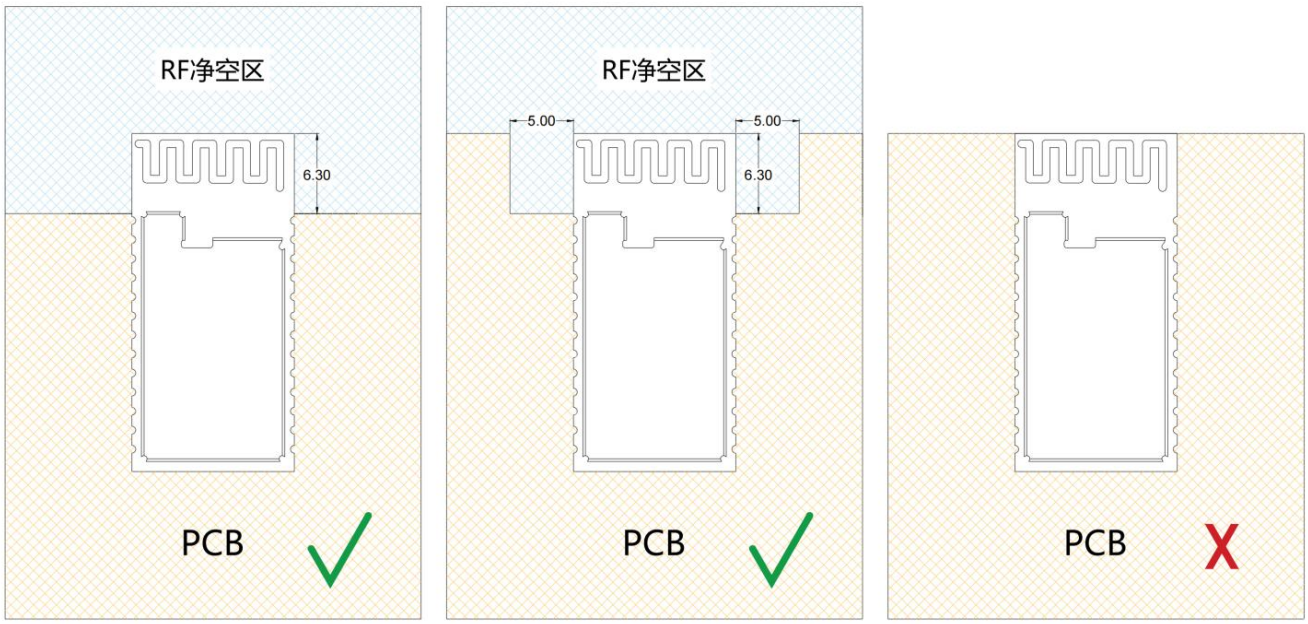

Figure 17：Reference position for module placement

5. Patch Requirements

5.1. Storage Conditions

Modules are shipped in vacuum sealed bags. The humidity sensitivity level of the module is 3 (MSL 3), and its storage must comply with the following conditions:

1. Recommended storage conditions: temperature 23±5°C, and relative humidity 35~60%.
2. Under the recommended storage conditions, the module can be stored in a vacuum sealed bag for 12 months.
3. Under workshop conditions with a temperature of 23±5°C and a relative humidity of less than 60%, the workshop life of the module after unpacking is 168 hours. Under this condition, the module can be directly subjected to reflow production or other high-temperature operations. Otherwise, the module needs to be stored in an environment with a relative humidity of less than 10% (for example, a moisture-proof cabinet) to keep the module dry.
4. If the module is under the following conditions, the module needs to be pre-baked to prevent the PCB from blistering, cracks and delamination that occurs after the module absorbs moisture and gets wet and then solders at a high temperature:

- Storage temperature and humidity do not meet the recommended storage conditions;
- The module failed to complete production or storage according to Article 3 above after unpacking;
- Vacuum packaging leaks, bulk materials;
- Before module repair;

5.2. Module Baking Treatment

- Requires high temperature baking at 120 ±5 °C for 8 hours;
- The second-baked module must be soldered within 24 hours after baking, otherwise it still needs to be stored in a dry box;

Remark

1. In order to prevent and reduce the occurrence of defective welding such as blistering and delamination caused by damp, strict control should be carried out. It is not recommended to expose to the air for a long time after unpacking the vacuum package.
2. Before baking, take the module out of the package and place the bare module on a high temperature resistant appliance to avoid high temperature damage to the plastic tray or reel; The second-baked module must be soldered within 24 hours after baking, otherwise it must be stored in a dry box. Please pay attention to ESD protection when unpacking and placing the module, for example, wear anti-static gloves。

5.3. Reflow Soldering

Use a printing squeegee to print the solder paste on the screen so that the solder paste is printed on the PCB through the opening of the screen. The force of the printing squeegee needs to be adjusted appropriately.In order to ensure the quality of the module printing paste, the thickness of the stencil corresponding to the module pad part is recommended to be 0.1~0.15mm .

The recommended reflow soldering temperature is 235~250 ºC, and the maximum should not exceed 250 ºC。In order to avoid damage to the module due to repeated heating, it is strongly recommended that customers re-attach the module after completing the reflow soldering on the first side of the PCB board. The recommended furnace temperature curve (lead-free SMT reflow soldering) and related parameters are shown in the chart below:

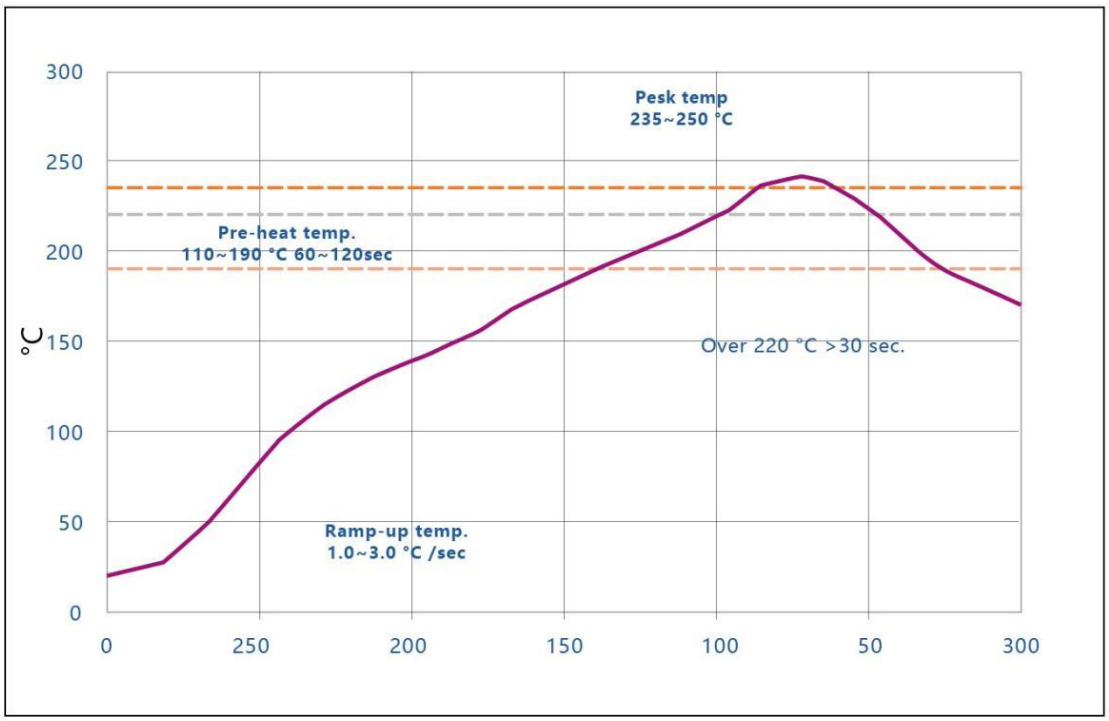

Figure 18: Recommended reflow soldering temperature profile

Table 15: Recommended reflow soldering temperature

Statistics name	Lower limit	Upper limit	unit
Slope 1 (target=2.0) is between 30.0 and 70.0	1	3	Degree/sec
Slope 2 (target=2.0) is between 70.0 and 150.0	1	3	Degree/sec
Slope 3 (target = -2.8) is between 220.0 and 150.0	-5	-0.5	Degree/sec
Constant temperature time 110-190℃	60	120	sec
@220℃ Reflow time	30	65	sec
Peak temperature	235	250	Celsius
@235℃ total time	10	30	sec

5.4. Packing Specification

The DX-BT24-S Bluetooth module is packaged in a pallet and sealed in a vacuum-sealed bag with a desiccant and humidity card in the vacuum-sealed bag. Each tray is long mm * wide mm *

high mm, and 25 modules are placed on each tray. Every 1000 modules are placed in a box with length 250mm*width 200mm*height 70mm, and each box with length 430mm*width 210mm*height 770mm can hold 5000 modules. The specific specifications are as follows

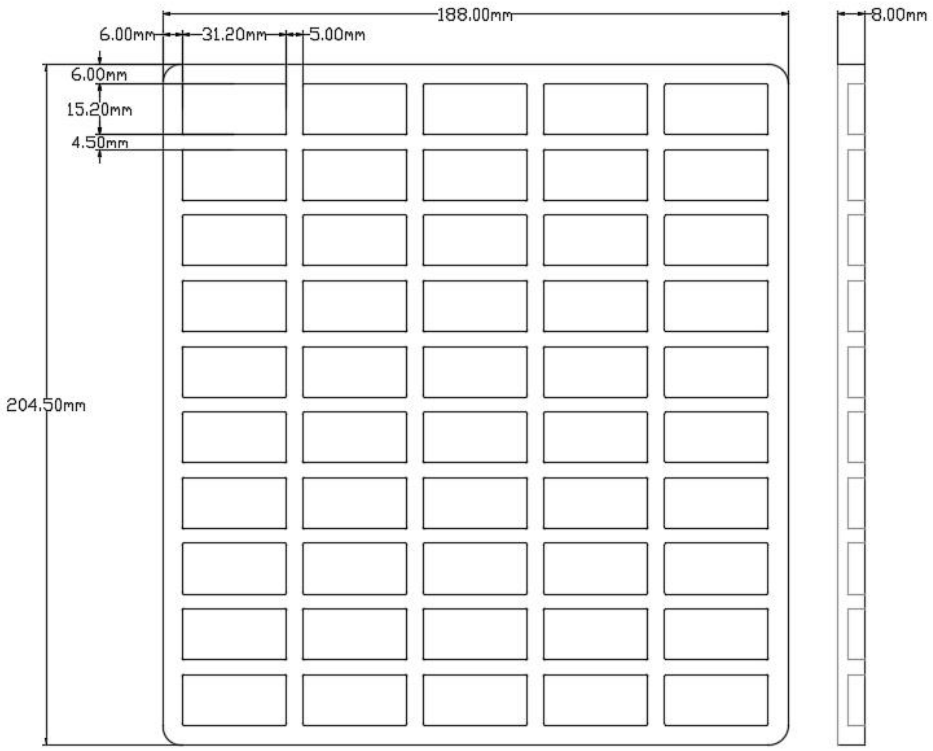

Figure 19：Pallet size (unit: mm)

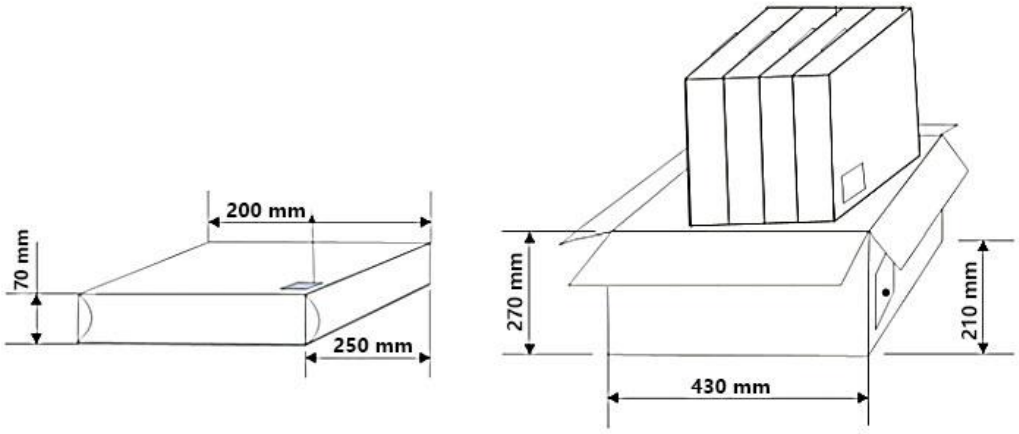

Figure 20：Packing box size (unit: mm)

Single Module

General Statements

1. Antenna List:
   Antenna type: PCB Antenna
   BT Antenna Gain: 0dBi
   Antenna impedance: 50 (Ω)
   Frequency range: 2400-2500MHz
2. Any change of antenna type is not allowed. The module only used PCB antenna.
3. Host containing the modules must comply with FCC Rule requirement

FCC Statement

This device complies with part 15 of the FCC Rules. Operation is subject to the following two conditions:

(1) This device may not cause harmful interference, and

(2) this device must accept any interference received, including interference that may cause undesired operation.

Any Changes or modifications not expressly approved by the party responsible for compliance could void the user's authority to operate the equipment.

The modular can be installed or integrated in mobile or fix devices only. This modular cannot be installed in any portable device.

Note: This equipment has been tested and found to comply with the limits for a Class B digital device, pursuant to part 15 of the FCC Rules. These limits are designed to provide reasonable protection against harmful interference in a residential installation. This equipment generates uses and can radiate radio frequency energy and, if not installed and used in accordance with the instructions, may cause harmful interference to radio communications. However, there is no guarantee that interference will not occur in a particular installation. If this equipment does cause harmful interference to radio or television reception, which can be determined by turning the equipment off and on, the user is encouraged to try to correct the interference by one or more of the following measures:

-Reorient or relocate the receiving antenna.

-Increase the separation between the equipment and receiver.

-Connect the equipment into an outlet on a circuit different from that to which the receiver is connected.

-Consult the dealer or an experienced radio/TV technician for help.

FCC Radiation Exposure Statement

This modular complies with FCC RF radiation exposure limits set forth for an uncontrolled environment. This transmitter must not be co-located or operating in conjunction with any other antenna or transmitter. This modular must be installed and operated with a minimum distance of 20 cm between the radiator and user body.

If the FCC identification number is not visible when the module is installed inside another device, then the outside of the device into which the module is installed must also display a label referring to the enclosed module. This exterior label can use wording such as the following: “Contains Transmitter Module FCC ID: 2AKS8-DX-BT24-S Or Contains FCC ID: 2AKS8-DX-BT24-S”

When the module is installed inside another device, the user manual of the host must contain below warning statements;

1. This device complies with Part 15 of the FCC Rules. Operation is subject to the following two conditions:
(1) This device may not cause harmful interference.
(2) This device must accept any interference received, including interference that may cause undesired operation.
2. Changes or modifications not expressly approved by the party responsible for compliance could void the user's authority to operate the equipment.

The devices must be installed and used in strict accordance with the manufacturer's instructions as described in the user documentation that comes with the product.

OEM INTEGRATION INSTRUCTIONS:

This device is intended only for OEM integrators under the following conditions:

The module must be installed in the host equipment such that 20 cm is maintained between the antenna and users, and the transmitter module may not be co-located with any other transmitter or antenna. The module shall be only used with the internal on-board antenna that has been originally tested and certified with this module. External antennas are not supported. As long as these 3 conditions above are met, further transmitter test will not be required.

However, the OEM integrator is still responsible for testing their end-product for any additional compliance requirements required with this module installed (for example, digital device emissions, PC peripheral requirements, etc.). The end-product may need Verification testing, Declaration of Conformity testing, a Permissive Class II Change or new Certification. Please involve a FCC certification specialist in order to determine what will be exactly applicable for the end-product.

Validity of using the module certification:

In the event that these conditions cannot be met (for example certain laptop configurations or co-location with another transmitter), then the FCC/IC authorization for this module in combination with the host equipment is no longer considered valid and the FCC ID/IC of the module cannot be used on the final product. In these circumstances, the OEM integrator will be responsible for re-evaluating the end product (including the transmitter) and obtaining a separate FCC authorization. In such cases, please involve a FCC/IC certification specialist in order to determine if a Permissive Class II Change or new Certification is required.

Upgrade Firmware:

The software provided for firmware upgrade will not be capable to affect any RF parameters as certified for the FCC/IC for this module, in order to prevent compliance issues.

End product labeling:

This transmitter module is authorized only for use in device where the antenna may be installed such that 20 cm may be maintained between the antenna and users. The final end product must be labeled in a visible area with the following: “Contains FCC ID: 2AKS8-DX-BT24-S”.

Information that must be placed in the end user manual:

The OEM integrator has to be aware not to provide information to the end user regarding how to install or remove this RF module in the user's manual of the end product which integrates this module. The end user manual shall include all required regulatory information/warning as show in this manual.

2.2 List of applicable FCC/IC rules
List the FCC/IC rules that are applicable to the modular transmitter. These are the rules that specifically establish the bands of operation, the power, spurious emissions, and operating fundamental frequencies. DO NOT list compliance to unintentional-radiator rules (Part 15 Subpart B/ICES-003) since

that is not a condition of a module grant that is extended to a host manufacturer. See also Section 2.10 below
concerning the need to notify host manufacturers that further testing is required.3 Explanation:
This module meets the requirements of FCC part 15C(15.247)/RSS-247.

2.3 Summarize the specific operational use conditions
Describe use conditions that are applicable to the modular transmitter, including for example any limits on FCC s, etc. For example, if point-to-point antennas are used that require reduction in power or compensation for cable loss, then this information must be in the instructions. If the use condition limitations extend to professional users, then instructions must state that this information also extends to the host manufacturer's instruction manual. In addition, certain information may also be needed, such as peak gain per frequency band and minimum gain, specifically for master devices in 5 GHz DFS bands.
Explanation: The EUT has a PCB Antenna , and the antenna use a permanently attached antenna which is not replaceable.

2.4 Limited module procedures
If a modular transmitter is approved as a "limited module," then the module manufacturer is responsible for approving the host environment that the limited module is used with. The manufacturer of a limited module must describe, both in the filing and in the installation instructions, the alternative means that the limited module manufacturer uses to verify that the host meets the necessary requirements to satisfy the module limiting conditions.
A limited module manufacturer has the flexibility to define its alternative method to address the conditions that limit the initial approval, such as: shielding, minimum signaling amplitude, buffered modulation/data inputs, or power supply regulation. The alternative method could include that the limited module manufacturer reviews detailed test data or host designs prior to giving the host manufacturer approval.
This limited module procedure is also applicable for RF exposure evaluation when it is necessary to demonstrate compliance in a specific host. The module manufacturer must state how control of the product into which the modular transmitter will be installed will be maintained such that full compliance of the product is always ensured. For additional hosts other than the specific host originally granted with a limited module, a Class II permissive change is required on the module grant to register the additional host as a specific host also approved with the module. Explanation: The Module is not a limited module.

2.5 Trace antenna designs
For a modular transmitter with trace antenna designs, see the guidance in Question 11 of KDB Publication 996369 D02 FAQ – Modules for Micro-Strip Antennas and traces. The integration information shall include for the TCB review the integration instructions for the following aspects: layout of trace design, parts list (BOM), antenna, connectors, and isolation requirements.
a) Information that includes permitted variances (e.g., trace boundary limits, thickness, length, width,shape(s),
dielectric constant, and impedance as applicable for each type of antenna);
b) Each design shall be considered a different type (e.g., antenna length in multiple(s) of frequency,the wavelength, and antenna shape (traces in phase) can affect antenna gain and must be considered); c) The parameters shall be provided in a manner permitting host manufacturers to design the printed circuit (PC) board layout;
d) Appropriate parts by manufacturer and specifications;

e) Test procedures for design verification; and
f) Production test procedures for ensuring compliance.

The module grantee shall provide a notice that any deviation(s) from the defined parameters of the antenna trace, as described by the instructions, require that the host product manufacturer must notify the module grantee that they wish to change the antenna trace design. In this case, a Class II permissive change application is required to be filed by the grantee, or the host manufacturer can take responsibility through the change in FCC ID (new application) procedure followed by a Class II permissive change application.

Explanation: Yes, The module with trace antenna designs, and This manual has been shown the layout of trace design, antenna, connectors, and isolation requirements.

2.6 RF exposure considerations

It is essential for module grantees to clearly and explicitly state the RF exposure conditions that permit a host product manufacturer to use the module. Two types of instructions are required for RF exposure information: (1) to the host product manufacturer, to define the application conditions (mobile, portable – xx cm from a person's body); and (2) additional text needed for the host product manufacturer to provide to end users in their end-product manuals. If RF exposure statements and use conditions are not provided, then the host product manufacturer is required to take responsibility of the module through a change in FCC ID/IC (new application).

Explanation: This module complies with FCC/IC RF radiation exposure limits set forth for an uncontrolled environment, This equipment should be installed and operated with a minimum distance of 20 centimeters between the radiator and your body." This module is designed to comply with the FCC/IC statement, FCC ID: 2AKS8-DX-BT24-S.

2.7 Antennas

A list of antennas included in the application for certification must be provided in the instructions. For modular transmitters approved as limited modules, all applicable professional installer instructions must be included as part of the information to the host product manufacturer. The antenna list shall also identify the antenna types (monopole, PIFA, dipole, etc. (note that for example an "omni-directional antenna" is not considered to be a specific "antenna type")).

For situations where the host product manufacturer is responsible for an external connector, for example with an RF pin and antenna trace design, the integration instructions shall inform the installer that unique antenna connector must be used on the Part 15 authorized transmitters used in the host product. The module manufacturers shall provide a list of acceptable unique connectors.

Explanation: The EUT has a PCB Antenna, and the antenna use a permanently attached antenna which is unique.

2.8 Label and compliance information

Grantees are responsible for the continued compliance of their modules to the FCC/IC rules. This includes advising host product manufacturers that they need to provide a physical or e-label stating "Contains FCC ID" with their finished product. See Guidelines for Labeling and User Information for RF Devices – KDB Publication 784748.

Explanation:The host system using this module, should have label in a visible area indicated the following texts: "Contains FCC ID: 2AKS8-DX-BT24-S."

2.9 Information on test modes and additional testing requirements5

Additional guidance for testing host products is given in KDB Publication 996369 D04 Module Integration Guide. Test modes should take into consideration different operational conditions for a stand-alone modular transmitter in a host, as well as for multiple simultaneously transmitting modules or other transmitters in a host product.

The grantee should provide information on how to configure test modes for host product evaluation for different operational conditions for a stand-alone modular transmitter in a host, versus with multiple, simultaneously transmitting modules or other transmitters in a host.

Grantees can increase the utility of their modular transmitters by providing special means, modes, or instructions that simulates or characterizes a connection by enabling a transmitter. This can greatly simplify a host manufacturer's determination that a module as installed in a host complies with FCC/IC requirements.

Explanation: Top band can increase the utility of our modular transmitters by providing instructions that simulates or characterizes a connection by enabling a transmitter.

2.10 Additional testing, Part 15 Subpart B/ICES-003 disclaimer

The grantee should include a statement that the modular transmitter is only FCC authorized for the specific rule parts (i.e., FCC/IC transmitter rules) listed on the grant, and that the host product manufacturer is responsible for compliance to any other FCC/IC rules that apply to the host not covered by the modular transmitter grant of certification. If the grantee markets their product as being Part 15 Subpart B/ICES-003 compliant (when it also contains unintentional-radiator digital circuity), then the grantee shall provide a notice stating that the final host product still requires Part 15 Subpart B/ICES-003 compliance testing with the modular transmitter installed.

Explanation: The module without unintentional-radiator digital circuity, so the module does not require an evaluation by FCC Part 15 Subpart B/ICES-003. The host shoule be evaluated by the FCC Subpart B/ICES-003.