USER'S MANUAL

# TH-282(4G)

PoC Radio

- **1.44 TFT display**
- **200 friend members**
- **WCDMA/LTE Network**
- **GPS Function optional**
- **Update software off-line**

ANY DISTANCE, ANYWHERE

## Items in the Package

Carefully unpack the radio. We recommend that you identify the items listed in the following table before discarding the packing material. If any items are missing or have been damaged during shipment, file a claim with the carrier immediately.

ACCESSORIES

| ITEM | QUANTITY |
|---|---|
| ANTENNA | 1 |
| USB CABLE | 1 |
| ADAPTOR | 1 |
| Li-Ion BATTERY | 1 |
| BELT CLIP | 1 |
| USER'S MANUAL | 1 |

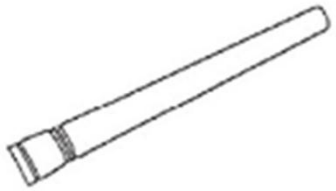

ANTENNA

Li-ion BATTERY

USER'S MANUAL

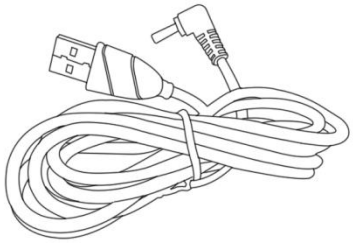

USB CABLE

BELT CLIP

## Product Overview

### Product controls

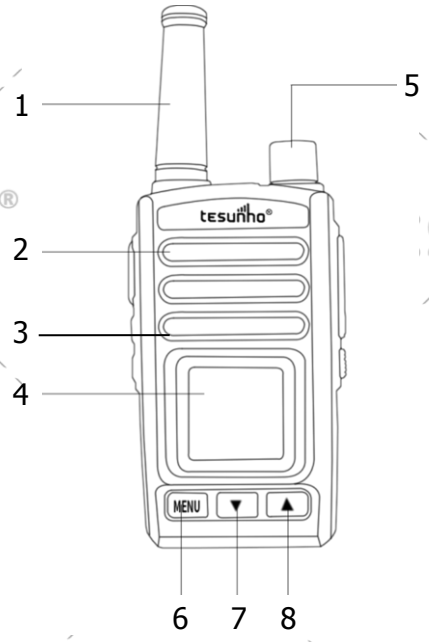


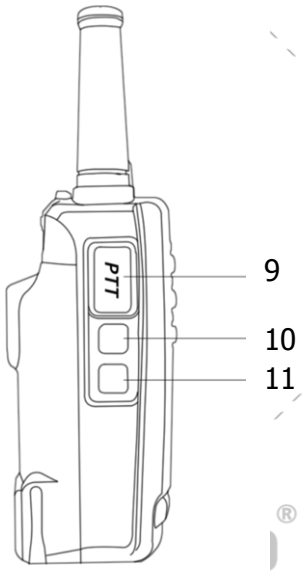


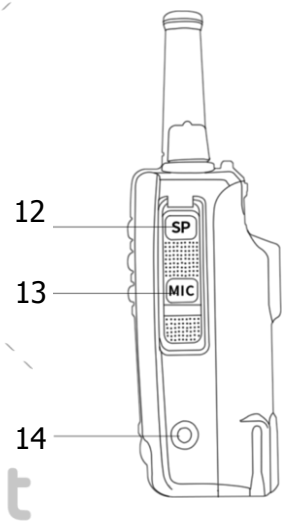


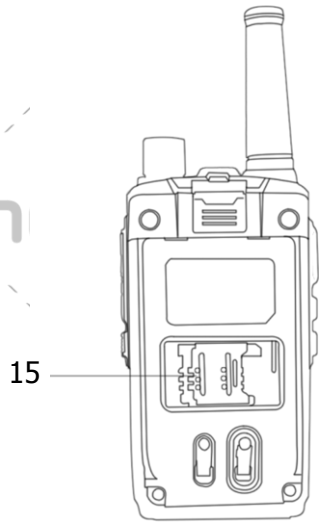


| No. | Part Name | No. | Part Name | No. | Part Name |
|---|---|---|---|---|---|
| 1 | Antenna | 6 | MENU Key | 11 | PF2 |
| 2 | Speaker | 7 | Down Key | 12 | Speaker Jack |
| 3 | Microphone | 8 | Up Key | 13 | Microphone jack |
| 4 | LCD Indicator | 9 | PTT(Push-to-Talk)Switch | 14 | Charging Hole |
| 5 | Power and Volume Control | 10 | PF1 | 15 | SIM Card Slot |

## LCD Icon

| Icon | Name | Status |
|---|---|---|
| | Battery | More bars indicate more battery power. |
| | Battery charging | Red: charging. Green: fully charged. |
| | Signal | More bars indicate stronger signal strength. |
| | SOS | Transmit SOS or receive SOS. |
| | GPS | GPS available, but no positioning success. |
| | GPS | GPS positioning success. |
| | Network availability | Normal network. |
| | Key Lock | Keypad locked. |
| | New Message | New message. |
| | Records | PTT Records is open. |
| | Monitor | Monitor the group which Icon shown at. |

## Basic Operation

| | |
|---|---|
| **N O T E** | **Please check the following two items before using.**<br>a.Please make sure the SIM card has been activated and has started the data service.<br>b.Please make sure the radio has been programmed with the activated platform account and the correct APN information.If not,please contact local dealer for assistance. |

### 1. Power on

A. Insert the SIM card

B. Pack the battery

C. Turn the volume control clockwise to power on.

### 2. Power off

Turn the volume control anticlockwise to power off.

**Caution**：No removing battery directly to power off, otherwise it will lead to the data loss and the walkie-talkie damages.

### 3. Transmitting

Press the PTT button to transmit, keep away from microphone 5cm at least.

**Exception & Talking Priority:**

If there is an advanced user starts to talk when you are transmitting, you will be forced to exit the transmitting mode.

### 4. Receiving

The LED indicator lights blue, LCD screen displays the transmitter's name when it is receiving.

## Menu Introduction

- Press **MENU** Key to enter menu
- Press“▲”or“▼” Key to select items
- Press **PF2** Key to back to the previous menu
- Press **MENU** Key to confirm selecting

| | Step 1 | Step 2 | Function Instruction |
|---|---|---|---|
| Menu | Choose Group | | Choose a group, then you can transmit and receive message within the group. |
| | Friend List | | Enter to make private call with the friend(s) that added on platform |
| | User List | | Enter to make private call with the group member(s) |
| | Dispatcher MSG | | Enter to check dispatcher messages |
| | PTT Records | | Enter to check the voice records. |
| | GPS INF | | Enter to check the local GPS information. |
| | ADV Settings | Network Mode | Auto/ 3G Prefer /3G only/ 4G only |
| | | MIC | Standard +1/+2/-2/-1 |
| | | SPK | Standard +1/+2/-2/-1 |
| | | Sound Quality | STD Mode / HQ Mode |
| | | SOS Mode | **OFF:** Close SOS function.<br>**Normal:** SOS alarm every 30 seconds and will stop after 3 cycles.<br>**HOT MIC:** SOS alarm 30 seconds, auto open MIC for 10 seconds, then close for 20 seconds, and will stop after 3 cycles |
| | | Record Control | Enter to turn on/off the PTT voice record function. |
| | | Time Zone | Enter to choose the correct local Time Zone |
| | | POC Update | Enter to check the current POC version or update it |
| | Settings | Backlight Mode | **Open:** Backlight keeps on.<br>**Auto:** Backlight turns on automatically when operating on keys, transmitting or receiving happens. Backlight off automatically after 10 seconds no operation.<br>**Key:** Backlight on automatically when operating on keys. Backlight off automatically after 10 seconds no operation |
| | | Auto lock | **ON:** Keypad locked automatically after 10 seconds no operation. Only PTT button and Side Keys can use.<br>**OFF:** Long press Side key 2 for 2 seconds to lock/unlock the keypad manually. |

| | | | |
|---|---|---|---|
| | | Language | English / Spanish / CHS |
| | | Key Tone | **ON:**A beep when operating on keys<br>**OFF:** No voice when operating on keys. |
| | | Roger Beep | **ON:**A beep when transmitting.<br>**OFF:** No voice when transmitting. |
| | | Version | Enter to check the software version, network mode, IMEI |

## Advanced Functions

### 1.Multi-members Selective Call

Enter friend or user list, short press “MENU” key to select one or more online friends, press PTT to create temporary group for selective call.

### 2. Monitor Group

Enter choose group, short press “PF1” key to monitor other group(s).Short press again to cancel.

### 3. APRS Function

Enter friend or user list, short press “PF1” key to check the online user’s GPS information..

## AFTERSALES SERVICE

**Warranty Period**

**Main Unit:** Battery, Charger and Adapter: half a year from the date the radio is sold.
(It's invalid without the seal of seller.)

**Free Maintenance**

The seller provides free maintenance for the nature breakups in the warranty period.

**Paid Maintenance**

Under the following conditions, the seller will charge the maintenance fee:

- When the maintenance is beyond the warranty period, the seller will charge reasonable maintenance free.
- The breakups are caused by nature disasters.
- The breakups are cause by customers.(Or their deliberate intentions.)
- The breakups are caused by the mishandling or operation unpermitted.
- The breakups are caused by using the nonstandard battery packs.

| | |
|---|---|
| **Seller:** | **Ser.No:** |
| **Model:** | **Date:** |

| Version | Data | Description |
|---|---|---|

| | | |
|---|---|---|
| 1.0 | 2019-5-21 | 1st releaed version |
| | | |
| | | |
| | | |
| | | |
| | | |
| | | |

Any Changes or modifications not expressly approved by the party responsible for compliance could void the user's authority to operate the equipment. This device complies with part 15 of the FCC Rules. Operation is subject to the following two conditions:

(1) This device may not cause harmful interference, and

(2) this device must accept any interference received, including interference that may cause undesired operation.

**Note:** This equipment has been tested and found to comply with the limits for a Class B digital device, pursuant to part 15 of the FCC Rules. These limits are designed to provide reasonable protection against harmful interference in a residential installation. This equipment generates, uses and can radiate radio frequency energy and, if not installed and used in accordance with the instructions, may cause harmful interference to radio communications. However, there is no guarantee that interference will not occur in a particular installation. If this equipment does cause harmful interference to radio or television reception, which can be determined by turning the equipment off and on, the user is encouraged to try to correct the interference by one or more of the following measures:

—Reorient or relocate the receiving antenna.

—Increase the separation between the equipment and receiver.

—Connect the equipment into an outlet on a circuit different from that to which the receiver is connected.

—Consult the dealer or an experienced radio/TV technician for help.

SAR tests are conducted using standard operating positions accepted by the FCC with the walkie talkie transmitting at its highest certified power level in all tested frequency bands, although the SAR is determined at the highest certified power level, the actual SAR level of the walkie talkie while operating can be well below the maximum value. Before a new model is a available for sale to the public, it must be tested and certified to the FCC that it does not exceed the exposure limit established by the FCC, tests for each product are performed in positions and locations as required by the FCC.

For body worn operation, this device has been tested and meets the FCC RF exposure when used with an accessory designated for this product or when used with an accessory that Contains no metal.

To maintaion compliance with the FCC RF exposure guideline, hold the transimitter and antenna at least 1.0 centimeters from your face and speak in a normal voice,with the antenna pointed up and away from the face.

This equipment comply with FCC radiation exposure limits set forth for an uncontrolled environment.