User manual

Model:SP637

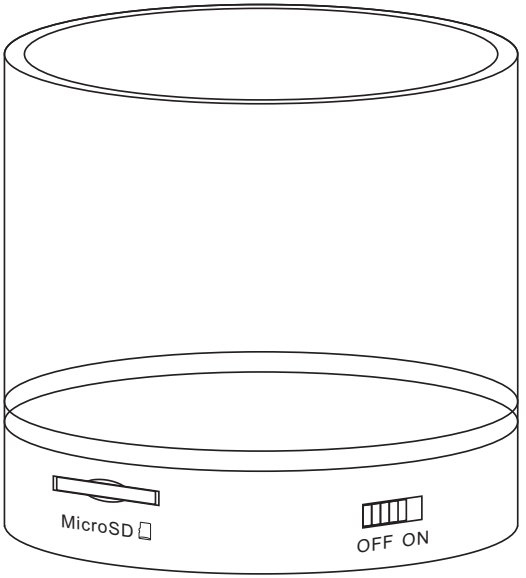

PLEASE READ BEFORE OPERATING THIS EQUIPMENT

Important Safety Instructions

1. **Read Instructions** - All the safety and operating instruction should be read before the product is operated.
2. **Retain Instructions** - The safety and operating instruction should be retained for future reference.
3. **Cleaning** - Unplug this product from the wall outlet before cleaning. Do not use liquid cleaners or aerosol cleaners. Clean only with a dry cloth.
4. **Attachments** - Do not use attachments not recommended by the product manufacturer as they may cause hazards.
5. **Water and Moisture** - Do not use this product near water - for example, near a bath tub, wash bowl, kitchen sink, or laundry tub; in a wet basement, or near a swimming pool, and the like. The apparatus shall not be exposed to dripping or splashing and that no objects filled with liquids, such as vases, shall be placed on apparatus.
6. **Ventilation** - Slots and openings in the cabinet are provided for ventilation and to ensure reliable operation of the product and to protect it from overheating, and these openings must not be blocked or covered. The openings should never be blocked by placing the product on a bed, sofa, rug, or other

similar surface. This product should not be placed in a built-in installation such as a bookcase or rack unless proper ventilation is provided or the manufacturer's instruction have been adhered to.

7. **Power Sources** - This product should be operated only from the type of power source indicated on the marking label. If you are not sure of the type of power supply to your home, consult your product dealer or local power company. For products intended to operate from battery power, or other sources, refer to the operating instruction.
8. **Safety Check** - Upon completion of any service or repairs to this product, ask the service technician to perform safety checks to determine that the product is in proper operating condition.
9. **Heat** - The product should be situated away from heat sources such as radiators, heat registers, stoves, or other products (including amplifiers) that produce heat. Battery shall not be exposed to excessive heat such as sunshine, fire, or the like.
10. Excessive sound pressure from earphones and head-phones can cause hearing loss.

LOCATION OF CONTROLS

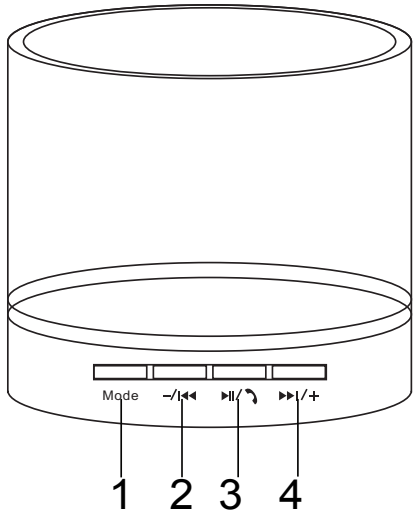

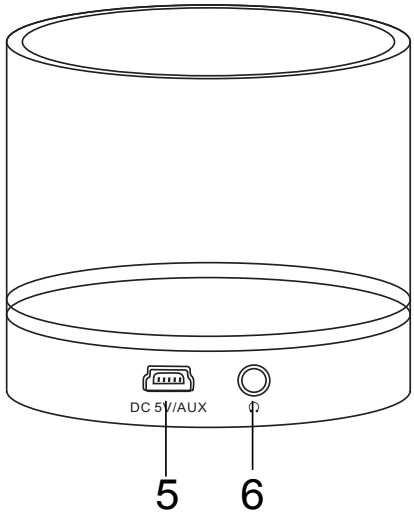

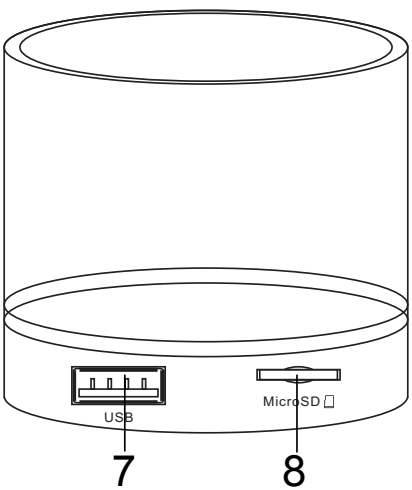

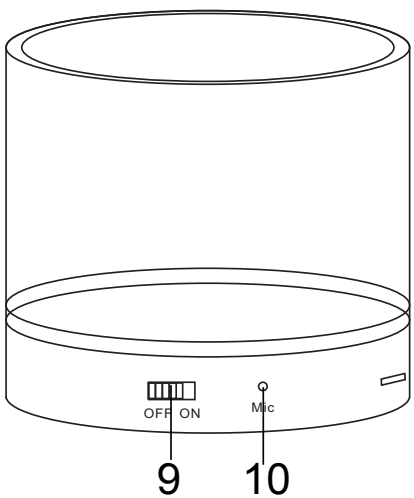

Status	Power Off	Charging	Fully Charged
Indicator	No light	Red light	No light

1. Mode Button: Press Mode button repeatedly to switch to desired mode.
2. –/⏮: Long press to reduce volume,short press to change to previous song or radio station.
3. ⏯/📞: MP3/radio/bluetooth mode short press to pause; radio mode long press for auto channel search; Phone incoming status short press to answer the phone and long press to hang up the call.
4. ⏭/+: Long press to add volume, short press to change to next song or radio station.
5. Mini USB charging/AUX in/Antenna (input the USB cable for antenna use) jack
6. 🎧: 3.5MM earphone jack (earphone cable not include)
7. USB
8. MicroSD card slot
9. On/off switch
10. Mic

POWER OPERATION

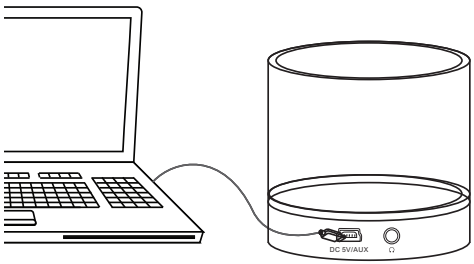

USB Power
Requires a Mini USB to USB cable (included).

PAIRING BLUETOOTH

1. Turn on the unit using the **on/off** switch.
2. Using the native controls on your Bluetooth device, select the “SP637” in your Bluetooth settings to pair. The device will connected automatically.
3. Audio played through the connected Bluetooth device will now be heard through the speakers.

THE AUX IN

1. Plug one end of USB/AUX cable into **Mini USB Input** on the unit.
2. Plug the other 3.5MM Audio input end into the audio output/ headphone output on an MP3 Player or other audio source.
3. Turn on the unit using the **on/off** switch.
4. Audio played through the connected device will now be heard through the speakers.

FEATURE

- Supports Bluetooth v4.0
- Wireless range: 33 feet
- Supports automatic device pairing
- 3.5mm earphone jack

- Built-in speaker
- Mini-USB port for battery recharge and Aux in
- Built-in 300mAh rechargeable lithium ion battery
- 1.11W Output Power

TROUBLESHOOTING GUIDE

Symptom	Possible Problem	Solution
No Charging	The USB power adaptor (Not included) is not plugged into a wall outlet or the USB cable (included) is not plugged into the mini USB jack on the unit	Plug the USB power adaptor (not included) into a wall outlet and plug the USB cable (included) into the mini USB jack on the unit
	Wall outlet is not functioning.	Plug another device into the same outlet to confirm the outlet is working.
	Computer USB port is not functioning.	Make sure your computer power is turned on and try another USB port.
No Sound	The unit battery is dead.	Recharge the battery.
	The unit placement is out of range.	Relocate the unit within Bluetooth operating range (30 feet).
	Volume set too low.	Increase the volume of your device.
Sound is distorted.	Volume level is set too high.	Decrease the volume of your device.
	Sound source is distorted.	If the source sound file is of poor quality, distortion and noise are easily noticed with high-power speakers. Try a different audio source such as a music CD.
Unit gets warm after extended play at high volume.	This is normal.	Turn the unit off for a period of time or lower the volume.

FCC Caution.

This device complies with part 15 of the FCC Rules. Operation is subject to the following two conditions: (1) This device may not cause harmful interference, and (2) this device must accept any interference received, including interference that may cause undesired operation.

Any Changes or modifications not expressly approved by the party responsible for compliance could void the user's authority to operate the equipment.

Note: This equipment has been tested and found to comply with the limits for a Class B digital device, pursuant to part 15 of the FCC Rules. These limits are designed to provide reasonable protection against harmful interference in a residential installation. This equipment generates uses and can radiate radio frequency energy and, if not installed and used in accordance with the instructions, may cause harmful interference to radio communications. However, there is no guarantee that interference will not occur in a particular installation. If this equipment does cause harmful interference to radio or television reception, which can be determined by turning the equipment off and on, the user is encouraged to try to correct the interference by one or more of the following measures:
-Reorient or relocate the receiving antenna.
-Increase the separation between the equipment and receiver.
-Connect the equipment into an outlet on a circuit different from that to which the receiver is connected.
-Consult the dealer or an experienced radio/TV technician for help.

The device has been evaluated to meet general RF exposure requirement. The device can be used in portable exposure condition without restriction.