VISION ENHANCEMENT IMAGER

Quick Start Guide

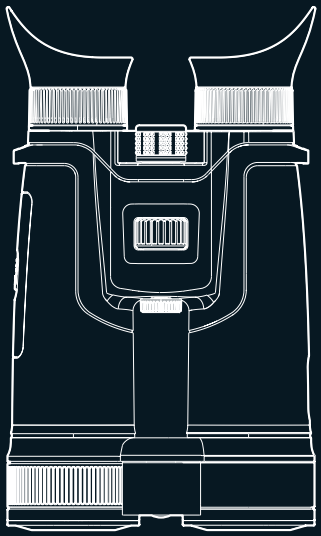

Thank you for choosing this product. Please read this Guide before use and properly keep it for future reference. We hope that the product meets your expectations.

V1.0.0

Table of contents

Important 2

Components and Controls 3

EN English 5

RU Русский 7

DE Deutsch 9

FR Français 11

IT Italiano 13

ES Español 15

JP 日本語 17

KR 한국인 19

PL Polski 21

RO Română 23

NO Norsk 25

SE Svenska 27

DK Dansk 29

HU Magyar 31

FI Suomalainen 33

CS čeština 35

SK slovenský 37

PT Português 39

Important

This Guide is a general guide for a series of products, which means that the product you receive may differ from the description in the Guide. The actual product you receive shall prevail.

This Guide is prepared to introduce our products to the users. We will try our best to ensure the accuracy of the Guide, but the completeness of the Guide still cannot be guaranteed, because our products have been continuously upgraded. We reserve the right to modify at any time without prior notice.

Android

iOS

Components and Controls

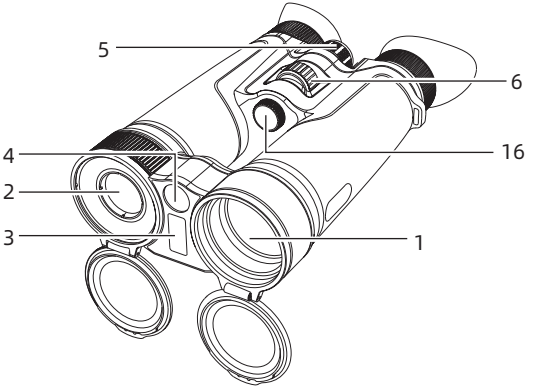

P1

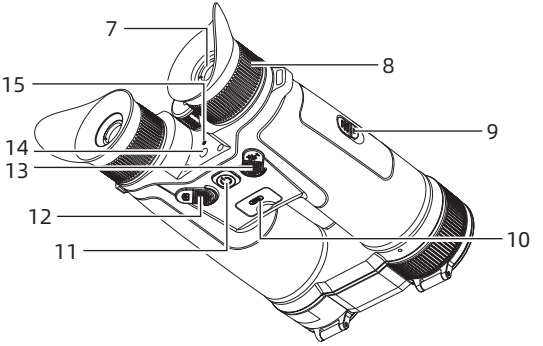

P2

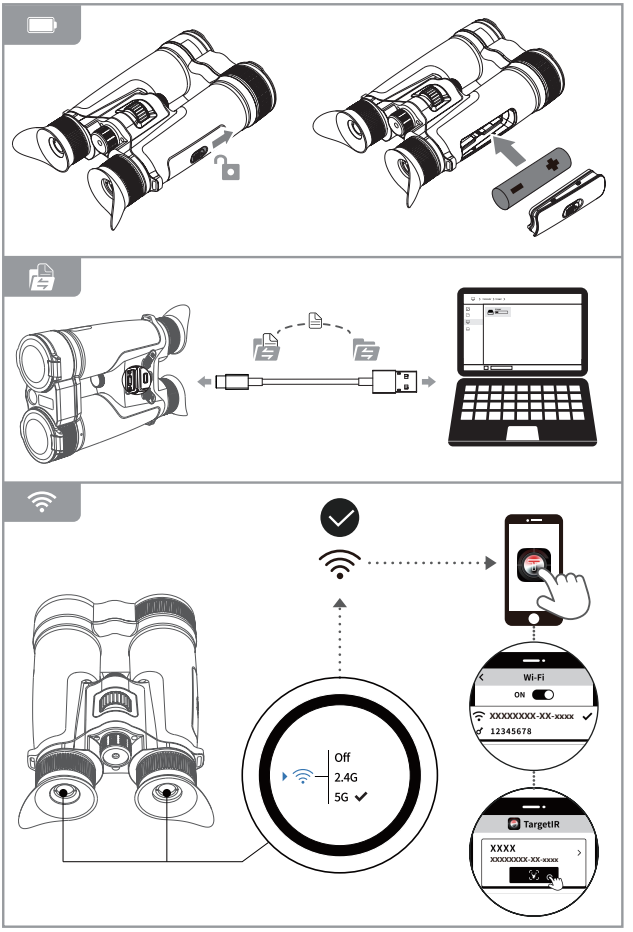
Off
2.4G
5G
Wi-Fi
ON
XXXXXXXX-XX-xxxx
12345678
TargetIR
XXXX
XXXXXXXX-XX-xxxx

EN English

1. Appearance (P1~P2)

No.	Device name	Functions	
1	Low-illumination lens	Improve the imaging effect in low light scenes	
2	Infrared module	Focus the infrared light	
3	Laser ranging module	Measuring distance	
4	Infrared fill light	Emit the infrared light for light filling	
5	Focusing knob	Rotate for focusing	
6	Function knob	Main interface	Rotate: Smooth zoom Short press: Switch the images Long press: Enter the menu
		Menu screen	Rotate: Switch the options Short press: Confirm Long press: Return to the previous page
7	Eyepiece	Observation interface	
8	Sight distance adjustment ring	Rotate: Adjust the visual clarity of human eyes Push: Adjust the pupil distance	
9	Battery compartment	Install batteries	
10	Data interface	Charging and data transmission	
11	Power button	Power-off state	Long press: Power on
		Power-on status	Short press: Image correction
			Long press: Screen off/power off

No.	Device name	Functions
12	Key A	Short press: Photographing; Long press: Video recording; Customizable
13	Key B	Short press: Turn on ranging; Long press: Turn off ranging; Customizable
14	Proximity sensor	Screen on when closing to the eyepiece, and screen off when leaving the eyepiece
15	Microphone	Recording
16	Mounting hole	External fixation

2. Detailed operation

Scan QR code for more instructions.

http://zg33a.guideir.cn/supportTemplate/handbook_1743038069250.pdf?jump_from=1_05_37_01

RU Русский

1. Внешний вид (P1~P2)

<table>
<tr><th>№</th><th>Название устройства</th><th colspan="2">Функция</th></tr>
<tr><td>1</td><td>Светосильный объектив</td><td colspan="2">Улучшение изображения в условиях недостаточной освещенности</td></tr>
<tr><td>2</td><td>Инфракрасный модуль</td><td colspan="2">Сфокусированный инфракрасный свет</td></tr>
<tr><td>3</td><td>Лазерный модуль измерения расстояния</td><td colspan="2">Расстояние измерения</td></tr>
<tr><td>4</td><td>Инфракрасный заполняющий свет</td><td colspan="2">Излучает инфракрасный свет для заливающего освещения</td></tr>
<tr><td>5</td><td>Кремальера</td><td colspan="2">Фокусирование вращения</td></tr>
<tr><td rowspan="2">6</td><td rowspan="2">Функциональная ручка</td><td>Главный экран</td><td>Вращение: плавное масштабирование
Короткое нажатие: переключение изображения
Длительное нажатие: вход в меню</td></tr>
<tr><td>Страница меню</td><td>Вращение: переключение опции
Короткое нажатие: подтверждение
Длительное нажатие: Назад</td></tr>
<tr><td>7</td><td>Окуляр</td><td colspan="2">Интерфейс наблюдения</td></tr>
</table>

№	Название устройства	Функция	
8	Кольцо регулировки расстояния видимости	Вращение: регулирует четкость наблюдения для человеческого глаза Толкание: регулировка расстояния между зрачками	
9	Батарейный отсек	Установка батарей	
10	Интерфейс данных	Зарядка и передача данных	
11	Кнопка питания	Состояние выключения	Длительное нажатие: включение
		Состояние включения	Короткое нажатие: коррекция изображения
			Длительное нажатие: отдых экрана/выключение
12	Кнопка A	Короткое нажатие: снимок; Длительное нажатие: видео; Пользовательские	
13	Кнопка B	Короткое нажатие: включение диапазона; Длительное нажатие: выключение диапазона; Пользовательские	
14	Датчики приближения	Близко к окуляру для загорания экрана, подальше от окуляра для отдыха экрана	
15	Микрофон	Звукозапись	
16	Монтажное отверстие	Внешнее крепление	

2. Подробная операция

Отсканируйте QR-код для получения подробных инструкций.

DE Deutsch

1. Aussehen (P1~P2)

Seriennummer	Gerät-Name	Funktion	
1	Objektiv für schwaches Licht	Verbessert die Bildwirkung bei schwachen Lichtverhältnissen	
2	Infrarot-Modul	Fokussiert Infrarotlicht	
3	Laser-Distanzmessmodul	Entfernungen messen	
4	Infrarot-Fülllicht	Emittiert Infrarotlicht als Fülllicht	
5	Fokussierknopf	Drehbarer Fokus	
6	Funktionsknopf	Hauptbildschirm	Drehen: Weiches Zoomen Kurzes Drücken: Bilder wechseln Lang drücken: Menü aufrufen
		Menüseite	Drehen: Optionen wechseln Kurzes Drücken: Bestätigen Langes Drücken: Rückkehren
7	Okular	Schnittstelle zur Beobachtung	
8	Ring zur Einstellung der Sichtweite	Drehen: Einstellen der Beobachtungsschärfe für das menschliche Auge Drücken: Einstellen des Pupillenabstands	
9	Batteriefach	Einlegen der Batterien	

<table>
<tr><th>Serien-nummer</th><th>Gerät-Name</th><th colspan="2">Funktion</th></tr>
<tr><td>10</td><td>Datenschnittstelle</td><td colspan="2">Aufladen und Übertragen von Daten</td></tr>
<tr><td rowspan="3">11</td><td rowspan="3">Power-Taste</td><td>Ausschaltstatus</td><td>Langer Druck: Einschalten</td></tr>
<tr><td rowspan="2">Einschaltstatus</td><td>Kurzes Drücken: Bildkorrektur</td></tr>
<tr><td>Langes Drücken: Bildschirm ausruhen/ Ausschalten</td></tr>
<tr><td>12</td><td>Taste A</td><td colspan="2">Kurzes Drücken: Foto aufnehmen; Langes Drücken: Videoaufnahme; Anpassbar</td></tr>
<tr><td>13</td><td>Taste B</td><td colspan="2">Kurzes Drücken: Entfernungsmesser einschalten; Kurzes Drücken: Lang drücken: Entfernungsmesser ausschalten; Anpassbar</td></tr>
<tr><td>14</td><td>Annäherungssensor</td><td colspan="2">In der Nähe des Okulars leuchtet er auf, außerhalb des Okulars ruht er.</td></tr>
<tr><td>15</td><td>Mikrofon</td><td colspan="2">Aufnahme</td></tr>
<tr><td>16</td><td>Befestigungslöcher</td><td colspan="2">Externe Fixierung</td></tr>
</table>

2. Detaillierte Bedienung

Scannen Sie den QR-Code, um weitere Anweisungen zu erhalten.

FR Français

1. Aspect (P1-P2)

<table>
<tr><th>N°</th><th>Désignation des composants</th><th colspan="2">Fonction</th></tr>
<tr><td>1</td><td>Objectif à faible éclairement lumineux</td><td colspan="2">Améliorer l'effet d’imagerie en cas de faible luminosité</td></tr>
<tr><td>2</td><td>Module infrarouge</td><td colspan="2">Focalisez la lumière infrarouge</td></tr>
<tr><td>3</td><td>Module de télémétrie laser</td><td colspan="2">Distance de mesure</td></tr>
<tr><td>4</td><td>Lumière d’appoint infrarouge</td><td colspan="2">Émettre une lumière infrarouge pour l'éclairage d'appoint</td></tr>
<tr><td>5</td><td>Bouton rotatif de focalisation</td><td colspan="2">Focalisation par rotation</td></tr>
<tr><td rowspan="2">6</td><td rowspan="2">Bouton de fonction</td><td>Image principale</td><td>Tourner : Zooming doux
Appui court : changement d’images
Appui long : Accès au menu</td></tr>
<tr><td>Page de menu</td><td>Tourner : Changement d’option
Appui court : Valider
Appui long : Retour</td></tr>
<tr><td>7</td><td>Oculaire</td><td colspan="2">Interface d’observation</td></tr>
<tr><td>8</td><td>Anneau d’ajustement de la distance de visibilité</td><td colspan="2">Tourner : Ajustement de la définition de l'observation à l’œil nu
Pousser : Ajustement de la distance pupillaire</td></tr>
<tr><td>9</td><td>Compartiment à piles</td><td colspan="2">Montage des piles</td></tr>
</table>

N°	Désignation des composants	Fonction	
10	Interface des données	Charge et transmission des données	
11	Touche d'alimentation	État d'arrêt	Appui long : démarrage
		État de démarrage	Appui court : rectifier l'image
			Appui long : Écran en veille/ Arrêt
12	Touche A	Appui court : photographie; Appui long : enregistrement vidéo; Personnalisation	
13	Touche B	Appui court : Activer la télémétrie; Appui long : Désactiver la télémétrie; Personnalisation	
14	S'approcher du capteur	L'écran est réveillé lors qu'on s'approche de l'oculaire, et qui est en veille lors qu'on s'éloigne de l'oculaire	
15	Microphone	Enregistrement audio	
16	Orifice de montage	Fixation externe	

2. Plus d'opérations

Veuillez scanner le code QR pour consulter la description de fonctionnement détaillée.

IT Italiano

1. Aspetto (P1~P2)

<table>
<tr><th>Pos.</th><th>Nome del componente</th><th colspan="2">Funzione</th></tr>
<tr><td>1</td><td>Obiettivo a bassa illuminazione</td><td colspan="2">Migliorare la qualità delle immagini acquisite in situazioni con scarsa illuminazione</td></tr>
<tr><td>2</td><td>Gruppo modulo a infrarosso</td><td colspan="2">Focalizzazione della luce a infrarosso</td></tr>
<tr><td>3</td><td>Gruppo modulo di misurazione distanza a laser</td><td colspan="2">Misurazione della distanza</td></tr>
<tr><td>4</td><td>Luci di illuminazione supporto a infrarosso</td><td colspan="2">Emettere la luce a infrarosso per l’illuminazione di supporto</td></tr>
<tr><td>5</td><td>Manopola di messa a fuoco</td><td colspan="2">Ruotare per la messa a fuoco</td></tr>
<tr><td rowspan="2">6</td><td rowspan="2">Manopola di funzione</td><td>Schermata principale</td><td>Rotazione: Zoom smooth
Premuto a breve: Commutare l'immagine
Premuto a lungo: entrare al menu</td></tr>
<tr><td>Pagina del menu</td><td>Rotazione: commutare le opzioni
Premuto a breve: Conferma
Premuto a lungo: Indietro</td></tr>
<tr><td>7</td><td>Oculare</td><td colspan="2">Interfaccia di osservazione</td></tr>
<tr><td>8</td><td>Anello di regolazione sulla distanza di vista</td><td colspan="2">Rotazione: regolare la chiarezza dell'osservazione dell'occhio umano
Spinta: regolare la distanza interpupillaria</td></tr>
</table>

Pos.	Nome del componente	Funzione	
9	Vano di batteria	Installazione di batteria	
10	Interfaccia dati	Caricare la batteria e trasferire i dati	
11	Tasto di alimentazione	Stato di spegnimento	Premuto a lungo: avviare il dispositivo.
		Stato di avviamento	Premuto a breve: Correggere l'immagine
			Premere a lungo: riposo di schermo/spegnimento di dispositivo
12	Tasto A	Premuto a breve: scattare la foto; Premuto a lungo: registrare il video; Personalizzazione disponibile	
13	Tasto B	Premuto a breve: attivare la funzione di misurazione distanza; Premuto a lungo: disattivare la funzione di misurazione distanza; Personalizzazione disponibile	
14	Sensore di prossimità	Lo schermo si accende quando avvicina all'oculare e si spegne quando è lontano dall'oculare	
15	Microfono	Registrazione fonica	
16	Foro di montaggio	Fissazione di collegamento esterno	

2. Ulteriori operazioni

Scansiona il codice QR per ottenere maggiori informazioni sull’utilizzo.

ES Español

1. Apariencia (P1~P2)

N.º	Componente	Función	
1	Lente de baja iluminación	Mejora el efecto de imagen en escenas con poca luz	
2	Módulo infrarrojo	Radiación infrarroja de enfoque	
3	Módulo de telémetro láser	Medición de distancia	
4	Luz de relleno infrarroja	Emisión de radiación infrarroja para la iluminación auxiliar	
5	Perilla de enfoque	Girar para el enfoque	
6	Perilla funcional	Imagen	Girar: zoom suave Pulsar brevemente: cambiar la imagen Mantener pulsado: acceder al menú
		Interfaz de menú	Girar: cambio de opciones Pulsar: confirmar Mantener pulsado: atrás
7	Ocular	Interfaz de observación	
8	Anillo de ajuste dióptrico	Girar: ajustar la agudeza visual de los ojos humanos Empujar: ajustar la distancia interpupilar	
9	Compartimiento de la batería	La batería se instala aquí	
10	Interfaz de datos	Carga y transmisión de datos	

N.º	Componente	Función	
11	Botón de encendido	Dispositivo apagado	Mantener pulsado: encender el dispositivo
		Dispositivo encendido	Pulsar brevemente: corregir la imagen
			Mantener pulsado: pantalla apagada / dispositivo apagado
12	Botón A	Pulsar: tomar fotos. Mantener pulsado: grabar vídeos. Personalizar.	
13	Botón B	Pulsar: activar el telémetro. Mantener pulsado: desactivar el telémetro. Personalizar.	
14	Sensor de proximidad	Activación de pantalla al acercar al ocular, apagado de pantalla al alejarse del ocular	
15	Micrófono	Grabación de audio	
16	Orificio de montaje	Conexión y fijación	

2. Operación detallada

Escanee el código QR para conocer más métodos de uso.

JP 日本語

1. 外観(P1〜P2)

No.	部品名	機能	
1	低照度レンズ	低照度シーンでの映像品質が向上できます	
2	赤外線モジュール	赤外線検出	
3	レザー測距モジュール	測定距離	
4	赤外線フィルライト	赤外線放射によるフィルライト	
5	フォーカスダイヤル	回転して焦点を調整します	
6	機能ダイヤル	メイン画面	回転:スムーズズーム 短押し:画像の切り替え 長押し:メニューに入る
		メニュー画面	回転:項目の切替 短推し:確認 長押し:戻る
7	接眼レンズ	観察画面	
8	視度調節ダイヤル	回転:接眼レンズと目の幅を合わせる 移動:瞳孔間距離の調整	
9	バッテリー収納部	バッテリーの取付	
10	データ伝送用ポート	データ伝送と充電に使用されます	
11	電源ボタン	電源オフ時	長押し:電源オン
		電源オン時	短押し:画像補正
			長押し:画面オフ/電源オフ
12	ボタンA	短押し:写真を撮る長押し:録画カスタマイズ可能	
13	ボタンB	短押し:測距起動長押し:測距終了カスタマイズ可能	
14	近接センサー	接眼レンズに接近すると画面オン、離れると画面オフ。	
15	マイク	録音	
16	取付穴	固定用	

2、 詳細操作

QRコードをスキャンしたら、詳細な操作方法を説明するユーザーマニュアルを取得できます。

KR 한국인

1. 외관(P1~P2)

<table>
<tr><th>순번</th><th>부속품명</th><th colspan="2">기능</th></tr>
<tr><td>1</td><td>저조도 렌즈</td><td colspan="2">저조도 장면에서의 이미징 효과 향상</td></tr>
<tr><td>2</td><td>적외선 모듈</td><td colspan="2">적외선에 초점을 맞춤</td></tr>
<tr><td>3</td><td>레이저 거리 측정 모듈</td><td colspan="2">거리 측정</td></tr>
<tr><td>4</td><td>적외선 조명</td><td colspan="2">적외선 발사하여 광선 보조</td></tr>
<tr><td>5</td><td>초점 조절 다이얼</td><td colspan="2">회전하여 초점 맞추기</td></tr>
<tr><td rowspan="2">6</td><td rowspan="2">기능 다이얼</td><td>메인 화면</td><td>회전: 부드럽게 배율 조정
짧게 누르기: 이미지 전환
길게 누르기: 메뉴 들어가기</td></tr>
<tr><td>메뉴 페이지</td><td>회전: 옵션 전환
짧게 누르기: 확인
길게 누르기: 돌아가기</td></tr>
<tr><td>7</td><td>접안 렌즈</td><td colspan="2">관찰 인터페이스</td></tr>
<tr><td>8</td><td>가시거리 조절 링</td><td colspan="2">회전: 사람의 눈 관찰 선명도 조절
밀기: 눈사이 거리 조정</td></tr>
<tr><td>9</td><td>배터리 홀더</td><td colspan="2">배터리 장착</td></tr>
<tr><td>10</td><td>데이터 인터페이스</td><td colspan="2">충전 및 데이터 전송</td></tr>
<tr><td rowspan="3">11</td><td rowspan="3">전원 버튼</td><td>전원이 꺼진 상태</td><td>길게 누르기: 전원 켜기</td></tr>
<tr><td rowspan="2">전원이 켜진 상태</td><td>짧게 누르기: 이미지 보정</td></tr>
<tr><td>길게 누르기: 화면 꺼짐 / 전원 종료</td></tr>
<tr><td>12</td><td>버튼 A</td><td colspan="2">짧게 누르기: 사진 찍기.길게 누르기: 녹화.자체 정의 가능</td></tr>
<tr><td>13</td><td>버튼 B</td><td colspan="2">짧게 누르기: 거리 측정 시작.길게 누르기: 거리 측정 종료.자체 정의 가능</td></tr>
<tr><td>14</td><td>센서 접근</td><td colspan="2">접안 렌즈에 접근하면 화면이 밝고, 접안 렌즈에서 멀리하면 화면이 꺼짐</td></tr>
<tr><td>15</td><td>마이크</td><td colspan="2">녹음</td></tr>
<tr><td>16</td><td>설치 구멍</td><td colspan="2">외장 고정</td></tr>
</table>

2. **세부 조작**

QR 코드를 스캔하여 더 많은 사용방법을 볼 수 있다.

PL Polski

1. Wygląd (P1~P2)

Nr	Nazwa urządzenia	Funkcja	
1	Obiektyw o niskim poziomie oświetlenia	Poprawa jakości obrazu w słabym oświetleniu	
2	Moduł podczerwieni	Skupia światło podczerwone	
3	Moduł pomiaru odległości laserowej	Mierzy odległość	
4	Podczerwony doświetlacz	Emituje światło podczerwone w celu doświetlenia	
5	Pokrętło regulacji ostrości	Obrót: ustawianie ostrości	
6	Pokrętło funkcyjne	Główny ekran	Obrót: płynne powiększanie Krótkie naciśnięcie: Zmiana obrazu Długie naciśnięcie: wejście do menu
		Strona menu	Obrót: zmiana opcji Krótkie naciśnięcie: potwierdzenie Długie naciśnięcie: powrót
7	Okular	Interfejs obserwacji	
8	Pierścień regulacji odległości widzenia	Obrót: regulacja ostrości dla oka Przesunięcie: regulacja rozstawu źrenic	
9	Komora baterii	Instalacja baterii	

Nr	Nazwa urządzenia	Funkcja	
10	Interfejs danych	Ładowanie i transmisja danych	
11	Przycisk zasilania	Stan wyłączony	Długie naciśnięcie: włączenie
		Stan włączony	Krótkie naciśnięcie: Kalibracja obrazu
			Długie naciśnięcie: wygaszenie ekranu/ wyłączenie
12	Przycisk A	Krótkie naciśnięcie: zdjęcie Długie naciśnięcie: nagrywanie wideo Możliwość dostosowania	
13	Przycisk B	Krótkie naciśnięcie: włączenie pomiaru odległości Długie naciśnięcie: wyłączenie pomiaru odległości Możliwość dostosowania	
14	Czujnik zbliżeniowy	Zbliżenie do okularu: podświetlenie ekranu; Oddalenie od okularu: wygaszenie ekranu	
15	Mikrofon	Nagrywanie dźwięku	
16	Otwór montażowy	Zewnętrzne mocowanie	

2. Szczegółowa obsługa

Zeskanuj kod QR, aby uzyskać więcej informacji.

RO Română

1. Aspect (P1~P2)

<table>
<tr><th>Numărul seriei</th><th>Denumirea dispozitivului</th><th colspan="2">Funcție</th></tr>
<tr><td>1</td><td>Obiectiv cu iluminare scăzută</td><td colspan="2">Îmbunătățirea efectului de imagistică în condiții de lumină scăzută</td></tr>
<tr><td>2</td><td>Modul infraroșu</td><td colspan="2">Focalizare a luminii infraroșii</td></tr>
<tr><td>3</td><td>Modul de măsurare a distanței cu laser</td><td colspan="2">Măsurarea distanței</td></tr>
<tr><td>4</td><td>Lumină infraroșie de completare</td><td colspan="2">Emitere de lumină infraroșie pentru îmbunătățirea iluminării</td></tr>
<tr><td>5</td><td>Butonul de focalizare</td><td colspan="2">Reglarea focalizării prin rotație</td></tr>
<tr><td rowspan="2">6</td><td rowspan="2">Buton funcțional</td><td>Ecran principal</td><td>Rotiți: Mărire lină
Apăsare scurtă: Comutarea imaginii
Apăsare lungă: Accesarea meniului</td></tr>
<tr><td>Pagina de meniu</td><td>Rotiți: Schimbarea opțiunilor
Apăsare scurtă: Confirmare
Apăsare lungă: Înapoi</td></tr>
<tr><td>7</td><td>Ocular</td><td colspan="2">Ecran de vizualizare</td></tr>
<tr><td>8</td><td>Reglarea distanței pupilei</td><td colspan="2">Rotiți: Reglarea clarității pentru ochiul uman
Apăsare: Reglarea distanței pupilei</td></tr>
</table>

Numărul seriei	Denumirea dispozitivului	Funcție	
9	Compartimentul pentru baterie	Instalarea bateriei	
10	Interfața de date	Încărcare și transfer de date	
11	Buton de pornire	Stare de oprire	Apăsare lungă: Pornire
		Stare de pornire	Apăsare scurtă: Corectarea imaginii
			Apăsare lungă: Oprirea ecranului/Oprirea dispozitivului
12	Buton A	Apăsare scurtă: Fotografiere Apăsare lungă: Înregistrare video Personalizabil	
13	Buton B	Apăsare scurtă: Activarea măsurării distanței Apăsare lungă: Dezactivarea măsurării distanței Personalizabil	
14	Senzor de proximitate	Activarea ecranului la apropierea de ocular, oprirea ecranului la depărtare	
15	Microfon	Înregistrare audio	
16	Orificiu de montare	Fixare externă	

2. Operațiune detaliată

Scanați codul QR pentru mai multe utilizări.

NO Norsk

1. Utseende (P1~P2)

Serie-nummer	Enhetsnavn	Funksjon	
1	Lavlys objektiv	Forbedre bildeopplevelsen i svakt lys	
2	Infrarødt modul	Fokuserer infrarødt lys	
3	Laseravstandsmåler	Måler avstand	
4	Infrarød lysforsterker	Sender ut infrarødt lys for å forbedre belysningen	
5	Fokusjusteringsknapp	Rotasjonsfokusjustering	
6	Funksjonsknapp	Hovedskjerm	Rotasjon: Jevn zooming Kort trykk: Bytt bilde Langt trykk: Gå til menyen
		Meny-side	Rotasjon: Bytt alternativer Kort trykk: Bekreft Langt trykk: Gå tilbake
7	Okular	Visningsskjerm	
8	Justeringsknapp for pupillavstand	Rotasjon: Juster visningsklarhet for øyet Skyv: Juster pupillavstanden	
9	Batterirom	Installer batteri	
10	Dataport	Lading og dataoverføring	
11	Strømknapp	Avslått tilstand	Langt trykk: Slå på
		Påslått tilstand	Kort trykk: Kalibrering av bilde
			Langt trykk: Skru av skjermen/Slå av

Serie-nummer	Enhetsnavn	Funksjon
12	Knapp A	Kort trykk: Ta bilde Langt trykk: Ta video Kan tilpasses
13	Knapp B	Kort trykk: Aktiver avstandsmåling Langt trykk: Deaktiver avstandsmåling Kan tilpasses
14	Nærhetssensor	Skjermen aktiveres når du er nær okularet, og deaktiveres når du er langt unna
15	Mikrofon	Opptak
16	Monteringshull	Ekstern montering

2. Detaljert bruk

Skann QR-koden for mer informasjon om bruken.

SE Svenska

1. Utseende (P1 ~ P2)

Serie-nummer	Enhetsnamn	Funktion	
1	Lågbelysningsobjektiv	Förbättra bildkvaliteten i svagt ljus	
2	Infraröd modul	Fokuserar infrarött ljus	
3	Laseravståndsmätare	Mäter avstånd	
4	Infraröd belysningslampa	Sänder ut infrarött ljus för att förbättra belysningen	
5	Fokuseringsratton	Rotationsfokus	
6	Funktionsratton	Huvudskärm	Rotation: Jämn zoomning Kort tryck: Byt bild Långt tryck: Gå till menyn
		Menysida	Rotation: Byt alternativ Kort tryck: Bekräfta Långt tryck: Återgå
7	Okulär	Visningsgränssnitt	
8	Pupilljusteringsring	Rotation: Justera ögonskärpa Tryck: Justera pupillavstånd	
9	Batterifack	Installera batteri	
10	Dataport	Laddning och datatransfer	
11	Strömknapp	Avstängt läge	Långt tryck: Slå på
		Påslaget läge	Kort tryck: Kalibrering av bild
			Långt tryck: Stäng av skärmen
12	Knapp A	Kort tryck: Ta foto Långt tryck: Spela in video Kan anpassas	

Serie-nummer	Enhetsnamn	Funktion
13	Knapp B	Kort tryck: Aktivera avståndsmätning Långt tryck: Stäng av avståndsmätning Kan anpassas
14	Nära avkännare	Skärmen aktiveras när du är nära okularet och stängs av när du är längre bort
15	Mikrofon	Ljudinspelning
16	Monteringshål	Extern montering

2. Detaljerade operationer

Skanna QR-koden för vidare användning.

DK Dansk

1. Udseende (P1 ~ P2)

Serie-nummer	Komponentnavn	Funktion	
1	Lavlys linse	Forbedrer billedkvaliteten under svag belysning	
2	Infrarød modul	Fokuserer infrarød lysstråling	
3	Laserafstandsmåler	Måler afstand	
4	Infrarød hjælpelampe	Afsender infrarød lysstråling for at forbedre belysningen	
5	Fokusknap	Rotation af fokus	
6	Funktionsknap	Hovedskærm	Rotation: Glat zoom Kort tryk: Skift billede Langt tryk: Indgang til menu
		Menu-skærm	Rotation: Skift valg Kort tryk: Bekræft Langt tryk: Tilbage
7	Okular	Observationsskærm	
8	Synsafstand justeringsring	Rotation: Justering af synlighed for øjet Skub: Justering af pupillafstand	
9	Batterirum	Installer batteri	
10	Data-interface	Opladning og dataoverførsel	
11	Strømknap	Slukket tilstand	Langt tryk: Tænd
		Tændt tilstand	Kort tryk: Kalibrer billede
			Langt tryk: Sluk skærm/Sluk

Serie-nummer	Komponentnavn	Funktion
12	Knap A	Kort tryk: Tag billede Langt tryk: Optag video Kan tilpasses
13	Knap B	Kort tryk: Start afstandsmåling Langt tryk: Sluk afstandsmåling Kan tilpasses
14	Nærhedssensor	Nær øjet skærmen tændes, væk fra øjet skærmen slukkes
15	Mikrofon	Optagelse
16	Monteringshul	Ekstern fastgørelse

2. Detaljerede operationer

Scan QR-koden til yderligere brug.

HU Magyar

1. Küllem (P1~P2)

<table>
<tr><th>Sorszám</th><th>Eszköz neve</th><th colspan="2">Funkció</th></tr>
<tr><td>1</td><td>Alacsony fényviszonyú lencse</td><td colspan="2">A gyenge fényviszonyú környezetben történő képjavítás</td></tr>
<tr><td>2</td><td>Infravörös modul</td><td colspan="2">Az infravörös fényre fókuszál</td></tr>
<tr><td>3</td><td>Lézeres távolságmérő modul</td><td colspan="2">A távolság mérésére szolgál</td></tr>
<tr><td>4</td><td>Infravörös kiegészítő világítás</td><td colspan="2">Infravörös fényt bocsát ki a világítás kiegészítésére</td></tr>
<tr><td>5</td><td>Fókuszáló gomb</td><td colspan="2">Forgatható fókuszálás</td></tr>
<tr><td rowspan="2">6</td><td rowspan="2">Funkció gomb</td><td>Főképernyő</td><td>Forgatás: Zökkenőmentes nagyítás
Rövid nyomás: Kép váltása
Hosszú nyomás: Belépés a menübe</td></tr>
<tr><td>Menü képernyő</td><td>Forgatás: Opció váltás
Rövid nyomás: Megerősítés
Hosszú nyomás: Vissza</td></tr>
<tr><td>7</td><td>Okulár</td><td colspan="2">Megtekintési felület</td></tr>
<tr><td>8</td><td>Távolságállító gyűrű</td><td colspan="2">Forgatás: Az emberi szem tisztaságának beállítása
Nyomás: Pupillatávolság beállítása</td></tr>
<tr><td>9</td><td>Akkumulátor rekesz</td><td colspan="2">Akkumulátor beszerelése</td></tr>
<tr><td>10</td><td>Adatcsatlakozó</td><td colspan="2">Töltés és adatátvitel</td></tr>
</table>

Sorszám	Eszköz neve	Funkció	
11	Bekapcsoló gomb	Kikapcsolt állapot	Hosszú nyomás: Bekapcsolás
		Bekapcsolt állapot	Rövid nyomás: Kép kalibrálása
			Hosszú nyomás: Képernyő kikapcsolása/ Kikapcsolás
12	A gomb A	Rövid nyomás: Fényképezés Hosszú nyomás: Videó felvétel Testreszabható	
13	B gomb	Rövid nyomás: Távolságmérés indítása Hosszú nyomás: Távolságmérés leállítása Testreszabható	
14	Közelségi érzékelő	Képernyő bekapcsolása, amikor közelít az okulárhoz, és kikapcsolása, amikor távolodik	
15	Mikrofon	Hangfelvétel	
16	Szerelési nyílás	Külső rögzítés	

2. Detaljerede operátor

Scan QR-kód til yderligere brug.

FI Suomalainen

1. Ulkonäkö (P1 ~ P2)

<table>
<tr><th>Sarja-numero</th><th>Laiteen nimi</th><th colspan="2">Toiminto</th></tr>
<tr><td>1</td><td>Matalan valon linssi</td><td colspan="2">Parantaa heikon valon olosuhteissa tapahtuvaa kuvantamista</td></tr>
<tr><td>2</td><td>Infrapuna-moduuli</td><td colspan="2">Kohdistaa infrapunasäteet</td></tr>
<tr><td>3</td><td>Laser-etäisyysmittausmoduuli</td><td colspan="2">Mittaa etäisyyksiä</td></tr>
<tr><td>4</td><td>Infrapunavalaistus</td><td colspan="2">Lähettää infrapunasäteitä valaistuksen parantamiseksi</td></tr>
<tr><td>5</td><td>Tarkennuspyörä</td><td colspan="2">Kierrä tarkennuksen säätämiseksi</td></tr>
<tr><td rowspan="2">6</td><td rowspan="2">Toimintapyörä</td><td>Päänäyttö</td><td>Kierrä: Sujuva suurennus
Pikapainallus: Vaihda kuva
Pitkä painallus: Siirry valikkoon</td></tr>
<tr><td>Valikkosivu</td><td>Kierrä: Vaihda valintoja
Lyhyt painallus: Vahvista
Pitkä painallus: Palaa</td></tr>
<tr><td>7</td><td>Okulaaria</td><td colspan="2">Tarkkailunäyttö</td></tr>
<tr><td>8</td><td>Diopterisäätöpyörä</td><td colspan="2">Kierrä: Säädä silmän kirkkaus
Työnnä: Säädä silmien välimatka</td></tr>
<tr><td>9</td><td>Akkukotelo</td><td colspan="2">Asenna akku</td></tr>
<tr><td>10</td><td>Tietoliityntäliitin</td><td colspan="2">Lataus ja tiedonsiirto</td></tr>
</table>

Sarja-numero	Laiteen nimi	Toiminto	
11	Virtapainike	Virransammutus	Pitkä painallus: Käynnistä
		Käynnistetty tila	Pikapainallus: Kalibroi kuva
			Pitkä painallus: Sammuta näyttö / Sammuta laite
12	Painike A	Lyhyt painallus: Ota kuva Pitkä painallus: Tallenna video Mukautettavissa	
13	Painike B	Lyhyt painallus: Käynnistä etäisyysmittaus Pitkä painallus: Lopeta etäisyysmittaus Mukautettavissa	
14	Lähestymisanturi	Käynnistä näyttö, kun lähestyt okulaaria; sammuta, kun poistut	
15	Mikrofoni	Äänitys	
16	Kiinnityskolo	Ulkoinen kiinnitys	

2. Yksityiskohtainen toiminta

Skannaa QR-koodi saadaksesi lisäohjeita.

CS čeština

1. Vzhled (P1 ~ P2)

Sériové číslo	Název zařízení	Funkce	
1	Objektiv s nízkým osvětlením	Zlepšení zobrazovacího výkonu v slabém světle	
2	Infrapracní modul	Zaostřuje infračervené světlo	
3	Laserový modul pro měření vzdálenosti	Měří vzdálenost	
4	Infračervené osvětlení	Vysílá infračervené světlo pro zajištění lepšího osvětlení	
5	Otočný zaostřovací knoflík	Otočení pro zaostření	
6	Funkční tlačítko	Hlavní obraz	Otočení: Hladké přiblížení Krátké stisknutí: Přepnutí obrazu Dlouhý stisk: Vstup do menu
		Menu	Otočení: Přepínání možností Krátké stisknutí: Potvrdit Dlouhý stisk: Návrat
7	Okulár	Obraz pro pozorování	
8	Kroužek pro nastavení zrakové vzdálenosti	Otočení: Nastavení jasu pro lidské oko Tlačítko: Nastavení vzdálenosti zorníků	
9	Bateriová schránka	Instalace baterie	
10	Datový port	Nabíjení a přenos dat	

Sériové číslo	Název zařízení	Funkce	
11	Tlačítko napájení	Stav vypnutí	Dlouhý stisk: Zapnutí
		Stav zapnutí	Krátké stisknutí: Kalibrace obrazu
			Dlouhý stisk: Vypnutí displeje/vypnutí zařízení
12	Tlačítko A	Krátké stisknutí: Pořízení fotografie Dlouhý stisk: Nahrávání videa Možnost přizpůsobení	
13	Tlačítko B	Krátké stisknutí: Aktivace měření vzdálenosti Dlouhý stisk: Deaktivace měření vzdálenosti Možnost přizpůsobení	
14	Senzor blízkosti	Aktivace displeje při přiblížení k okuláru, vypnutí displeje při vzdálení	
15	Mikrofon	Nahrávání zvuku	
16	Montážní otvor	Externí upevnění	

2. Detailní provoz

Naskenujte QR kód pro další pokyny.

SK slovenský

1. Vzhľad (P1 ~ P2)

Sériové číslo	Názov zariadenia	Funkcia	
1	Objektív s nízkym osvetlením	Zlepšenie kvality obrazu v slabých svetelných podmienkach	
2	Infraródy modul	Zaostruje na infračervené svetlo	
3	Modul na meranie vzdialenosti pomocou lasera	Meria vzdialenosť	
4	Infraródne osvetlenie	Vysiela infračervené svetlo na doplnenie osvetlenia	
5	Otočný zaostrovací gombík	Otočné zaostrovanie	
6	Funkčné tlačidlo	Hlavná obrazovka	Otočenie: Plynulé priblíženie Krátke stlačenie: Prepnúť obraz Dlhé stlačenie: Prejsť do ponuky
		Ponuková obrazovka	Otočenie: Prepnúť možnosť Krátke stlačenie: Potvrdiť Dlhé stlačenie: Späť
7	Okulár	Zobrazenie	
8	Krúžok na nastavenie vzdialenosti očí	Otočenie: Nastaviť jasnosť pre zrakové pozorovanie Tlačidlo: Nastavenie vzdialenosti očí	
9	Batériový box	Inštalácia batérie	

Sériové číslo	Názov zariadenia	Funkcia	
10	Dátový port	Nabíjanie a prenos dát	
11	Tlačidlo napájania	Vypnutý režim	Dlhé stlačenie: Zapnúť
		Zapnutý režim	Krátke stlačenie: Kalibrácia obrazu
			Dlhé stlačenie: Vypnúť obrazovku/Vypnúť
12	Tlačidlo A	Krátke stlačenie: Fotografovanie Dlhé stlačenie: Nahrávanie videa Prispôsobiteľné	
13	Tlačidlo B	Krátke stlačenie: Zapnúť meranie vzdialenosti Dlhé stlačenie: Vypnúť meranie vzdialenosti Prispôsobiteľné	
14	Senzor priblíženia	Obrazovka sa zapne, keď sa priblížite k okuláru, a vypne, keď sa vzdialite	
15	Mikrofón	Nahrávanie zvuku	
16	Montážne otvory	Externé uchytenie	

2. Podrobná prevádzka

Naskenujte QR kód pre ďalšie pokyny.

PT Português

1. Aparência (P1~P2)

Nº	Nome do aparelho	Função	
1	Lente para baixa luminosidade	Aprimora a qualidade de imagem em ambientes com pouca luz	
2	Módulo infravermelho	Foco no feixe infravermelho	
3	Módulo de medição de distância a laser	Medição de distância	
4	Iluminação infravermelha	Emitir luz infravermelha para iluminação complementar	
5	Botão de ajuste de distância focal	Girar para focar	
6	Botão de função	Imagem principal	Girar: zoom suave Pressão curta: alterar imagens Pressão longa: acessar o menu
		Página de menu	Girar: alternar opções Pressão curta: confirmar Pressão longa: retornar
7	Ocular	Interface de observação	
8	Anel de ajuste de distância visual	Girar: Ajustar a clareza de observação para os olhos humanos Empurrar: ajustar distância interpupilar	
9	Compartimento de Bateria	Instalar a bateria	
10	Interface de dados	Carregar e transmitir dados	

Nº	Nome do aparelho	Função	
11	Botão de Energia	Estado desligado	Pressão longa: ligar
		Estado ligado	Pressão curta: correção de imagem
			Pressão longa: apagar tela/ desligar
12	Tecla A	Pressão curta: tirar foto; Pressão longa: gravar vídeo Personalizável	
13	Tecla B	Pressão curta: ativar medição de distância; Pressão longa: desativar medição de distância; Personalizável	
14	Sensor de proximidade	Tela liga ao aproximar do ocular, tela apaga ao afastar do ocular	
15	Microfone	Gravação de áudio	
16	Orifício de montagem	Fixação externa	

2. Operação Detalhada

Escaneie o QR code para obter informações adicionais.

EN

Certification information:

- These terms apply only to the products with corresponding markings or features.
- The information is intended to ensure that users use this product correctly to avoid danger or property damage.
- This product must be used in strict compliance with local electrical safety regulations.

EU statement

This product and its accessories (where applicable) are marked with "CE" and therefore conform to the European harmonized standards provided in applicable Directive 2014/30/EU (EMCD), Directive 2014/35/EU (LVD), and Directive 2011/65/EU (RoHS).

Directive 2012/19/EU (WEEE Directive): Products with this symbol should not be discarded as unsorted municipal waste in the EU. For proper recycling, you're requested to return this product to your local supplier when purchasing the same new equipment, or discard it at a designated recycling collection point. Details are presented on www.recyclethis.info for reference.

Directive 2006/66/EC and its revised Directive 2013/56/EU (Battery Directive):

This product contains the batteries that must not be disposed of as unsorted municipal waste in the EU. Please see the product manuals for specific information on battery. Batteries marked with this symbol may bear letters representing cadmium (Cd), lead (Pb), or mercury (Hg). For proper recycling, you're requested to return the battery to the supplier or a designated recycling collection point. Details are presented on www.recyclethis.info for reference.

This product and -if applicable- the supplied accessories too are marked with "UKCA" and comply therefore with the following directives: Radio Equipment Regulations 2017, Electromagnetic Compatibility Regulations 2016, Electrical Equipment (Safety) Regulations 2016, the Restriction of the Use of Certain Hazardous Substances in Electrical and Electronic Equipment Regulations 2012.

FCC WARNING

This equipment may generate or use radio frequency energy. Changes or modifications to this equipment may cause harmful interference unless the modifications are expressly approved in the instruction manual. The user could lose the authority to operate this equipment if an unauthorized change or modification is made.

This device complies with part 15 of the FCC Rules.

Operation is subject to the following two conditions:

(1) This device may not cause harmful interference.

(2) This device must accept any interference received, including interference that may cause undesired operation.

Laser Hazards Warning

a) Before operating the laser device, always make sure the lens hood is fully open to avoid possible damage to lens.

b) Laser beams with high power, can cause irreversible damage to the eye or skin burns and ignition of other flammable materials. Therefore, make sure that no people or flammable materials are in the path of the laser beam before switching on the laser.

c) For safety of you and your family, please keep this device out of the reach of children or minors. Always ensure that equipment is kept in a safe location when not in use.

d) You're requested to strictly follow the above safety guidelines and use the laser device with caution to prevent any possible injury or accident.

Safety Warning

- **Power supply:**
  1) Please use the original adapter (the actual product in the original package may vary) for power supply.
  2) Do not connect more than one device to the same power transformer to avoid overheating or fire hazard due to overloading.
- **Battery:**
  1) Do not remove the built-in battery. Where necessary, please contact the manufacturer for repair.
  2) Do not attempt to disassemble the battery. Once the battery leaks and the liquid gets into the eyes, flush the eyes

with clean water immediately and seek medical care.

3) Do not short-circuit the battery (connect its positive and negative terminals).
4) Do not place the battery in humid conditions and water, nor expose them to high ambient temperatures or near hot objects.
5) Do not put the battery near heat sources or combustion sources. Avoid direct sunlight.
6) Keep the battery out of the reach of children.
7) Do not swallow the battery to avoid chemical burns.
8) Please use the battery provided with the product for power supply. Improper use or replacement by an incorrect type can lead to an explosion.
9) Please charge the battery according to the charging instructions and procedures in the operation manual.
10) Please use the original adapter or charger for charging (the actual product in the original package may vary). The battery temperature range for charging must be between 0℃ and 45℃ to avoid potential damage or even personal injury due to battery overheating.
11) Please confirm that no combustible materials are stored within 2 meters of the charger during charging.
12) If storing the battery for a long time, it is recommended to charge the battery every 3 months. Otherwise, the battery can be damaged.

- **Usage environment:**
  1) It is prohibited to use this product in dangerous locations where fire, explosion or other hazards may exist to prevent serious harms.
  2) Do not drop this product from height or subject it to impact.
  3) Use or store the device at an ambient temperature that does not exceeds the permitted operating or storage temperature to prevent product damage.
  4) Do not direct the product straight towards high-power infrared sources, such as the sun, lasers, spot welders, etc..
  5) Do not block the openings of the product to avoid damage.
  6) Keep the product and cables away from soluble or similar liquids to avoid damage.
  7) Do not expose the product to high levels of EMF radiation.
  8) Do not wobble, knock, throw or shake the product and accessories violently. Please do your best to keep it stable when using the product to prevent damage.
- **Maintenance:**
  1) If the product does not operate properly, please contact your dealer or the nearest service center. In no event shall the Company be liable for malfunctions caused by unwarranted repairs or maintenance.
  2) Please comply with the following measures when wiping this product:
     Non-optic surfaces: wipe with a clean, soft cloth when necessary.
     Optic surface: Do not stain the optic surface of the lens. Sweat from your hands can leave marks on the lens glass and may damage the optical coatings on the glass surface. So you should never touch the lens. When the surface of the optic lens is dirty, please use the lens tissue to wipe it carefully.
  3) If this product is not in use, please cover the lens hood and place the product and all accessories in a special packaging box.
- **Transportation**
  1) When transporting the device, please put the device in its original or similar packaging.
  2) Please retain all packaging for future use. If any malfunction occurs, the device shall be returned to the factory in its original packaging.
  3) The Company will not be held liable for any damage of the product for not having used the original packaging during transportation.
- **Emergency response**
  In case of fumes, abnormal odor or sound from the product, please shut down the device immediately, unplug all power sources, and contact the repair center promptly.

FCC WARNING

This equipment may generate or use radio frequency energy.
Changes or modifications to this equipment may cause harmful interference unless the modifications are expressly approved in the instruction manual.
The user could lose the authority to operate this equipment if an unauthorized change or modification is made.
This device complies with part 15 of the FCC Rules.
Operation is subject to the following two conditions: (1) This device may not cause harmful interference, and (2) this device must accept any interference received, including interference that may cause undesired operation.
The device has been evaluated to meet general RF exposure requirement.
The device can be used in portable exposure condition without restriction.
NOTE: This equipment has been tested and found to comply with the limits for a Class B digital device, pursuant to part 15 of the FCC Rules.
These limits are designed to provide reasonable protection against harmful interference in a residential installation.
This equipment generates, uses and can radiate radio frequency energy and, if not installed and used in accordance with the instructions, may cause harmful interference to radio communications.
However, there is no guarantee that interference will not occur in a particular installation.
If this equipment does cause harmful interference to radio or television reception, which can be determined by turning the equipment off and on, the user is encouraged to try to correct the interference by one or more of the following measures:•Reorient or relocate the receiving antenna.
•Increase the separation between the equipment and receiver.
•Connect the equipment into an outlet on a circuit different from that to which the receiver is connected.
•Consult the dealer or an experienced radio/TV technician for help.
The rating information is located at the bottom of the unit.
FCC RF exposure StatementThis equipment complies with FCC radiation exposure limits set forth for an uncontrolled environment.
End user must follow the specific operating instructions for satisfying RF exposure compliance.
This transmitter must not be co-located or operating in conjunction with any other antenna or transmitter.
The device is designed to meet the requirements for exposure to radio waves established by the Federal Communications Commission (USA).
These requirements set a SAR limit of 1.6 Wkg averaged over one gram of tissue.
The highest SAR yalue renorted under this standard during product certification for using at the body is 0.605 W/kg.

Special statement: the version of the guide will be updated after the technical improvement of the product.