www.switch-bot.com

V1.0-2307

SwitchBot Mini Robot Vacuum K10+

User Manual

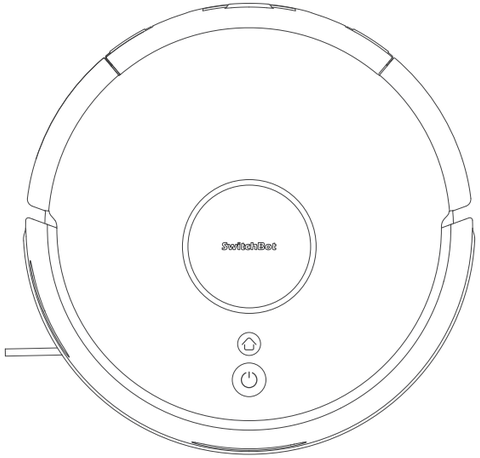

Please read this user manual carefully before using your device.

Contents

Product Overview
Package Contents ---------- 01
List of Components ---------- 01

How to Use
Preparation ---------- 04
Using Your Mini Robot Vacuum K10+ ---------- 04

Troubleshooting ---------- 09

Care and Maintenance ---------- 10

Safety Information ---------- 15
Warning ---------- 15
Precautions ---------- 15
LED Indicator Light ---------- 16
Network Configuration ---------- 16
Firmfare Upgrades ---------- 16

Specifications ---------- 16

Warranty Information
Warranty ---------- 17
Contact & Support ---------- 17

Product Overview

Package Contents

Mini Robot Vacuum K10+ × 1 Auto-Empty Station × 1 Mopping Pad Plate × 1 Edge-Sweeping Brush × 2
Small Cleaning Tool × 1 Dust Bag × 2 Bin Filter × 2 Original Mopping Cloth Pack × 1 Quick Start Guide × 1
User Manual × 1 After-sales Card × 1

List of Components

Mini Robot Vacuum K10+

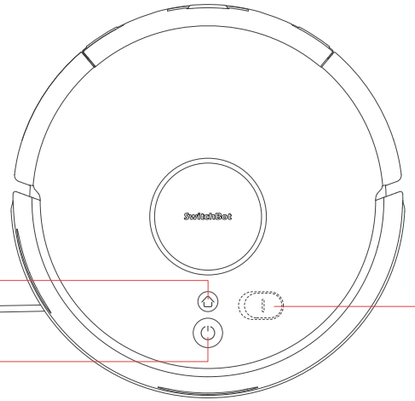

HOME Button
- Short press to recharge / pause cleaning

CLEAN Button
- Long press to turn on/off
- Short press to start/pause cleaning

ON/OFF Switch
- Flip to "O" to turn OFF
- Flip to "I" to turn ON

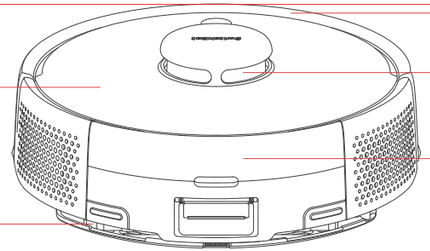

Top View

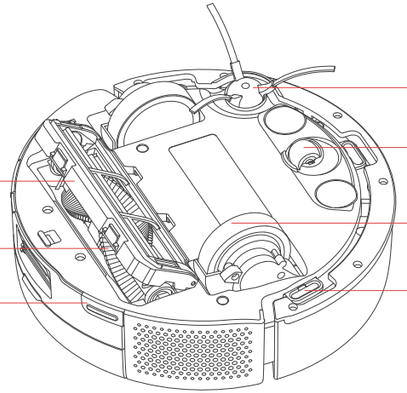

Bottom View

Auto-Empty Station

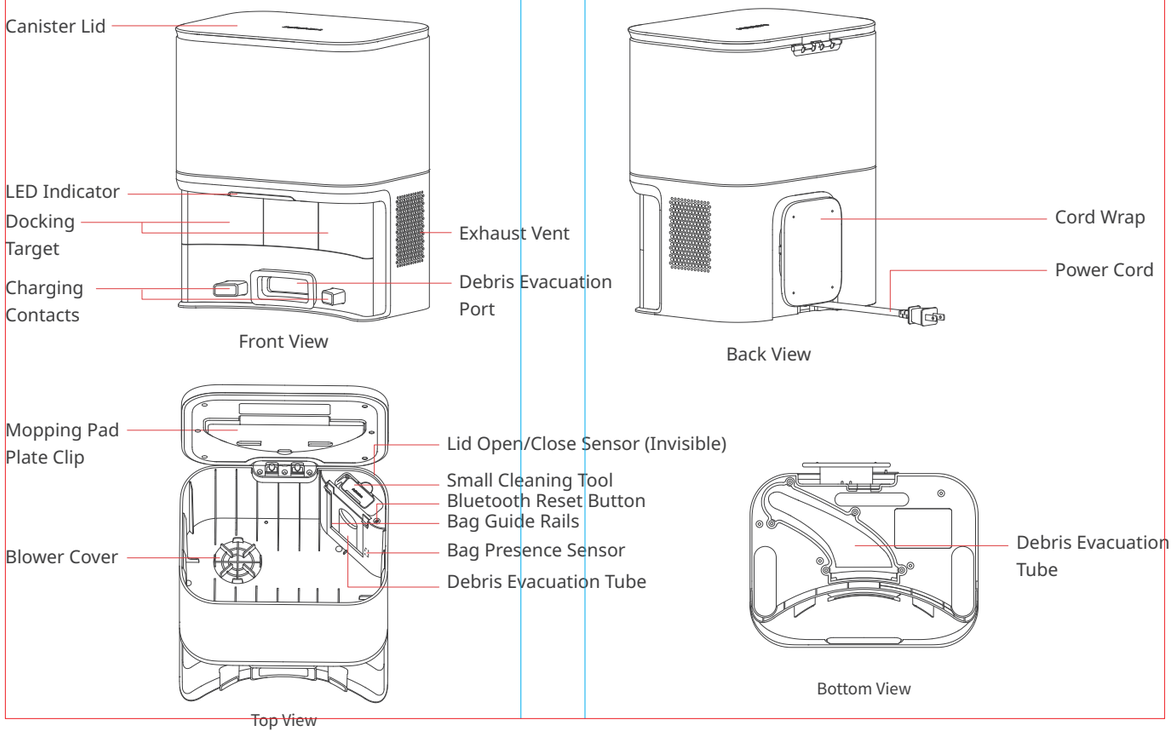

How to Use

Preparation

You will need:

- A smartphone or tablet using Bluetooth 4.2 or later.
- The latest version of our app, downloadable via the Apple App Store or Google Play Store.
- A SwitchBot account, you can register via our app or sign in to your account directly if you already have one.

iOS 11.0+ Android OS 5.0+

Using Your Mini Robot Vacuum K10+

Positioning and Powering On

1. Place the Auto-Empty Station on a horizontal hard floor and connect the power supply.

- Remove the protective film covering the charging area of your dock to ensure your device can charge correctly.
- Organize any excess cable to prevent your power cable from being stretched by your robot while cleaning.
- Leave a space of 0.5 m (1.6 ft.) on both sides and 1.5 m (4.9 ft) in front of the base, and make sure there are no objects or strong light within this area.
- Ensure the Auto-Empty Station is placed away from stairs, other open areas and heat sources (such as heaters).
- Do not put the Auto-Empty Station on carpets or move it frequently. If the base is moved, your robot may fail to locate itself or remove the current selected map. As such, map information (no-go zones, room names, etc.) may be lost. Your robot will create and save a new map during the next cleaning session.

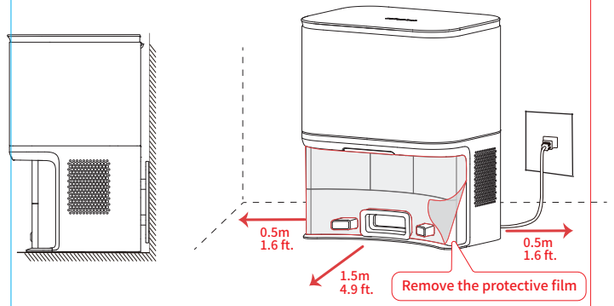

2. Put your robot on the floor and remove the two protective foam strips on both sides.

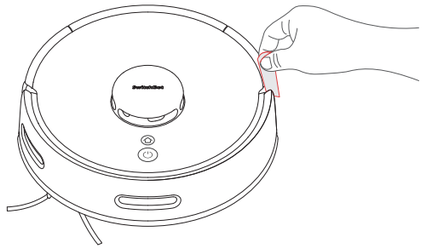

3. Remove the faceplate and flip the ON/OFF switch to "I".

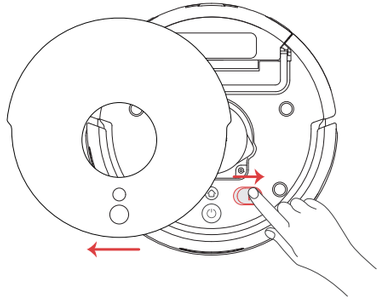

4. Wake up your robot.

Method 1: Press and hold the CLEAN button for 5 to 10 seconds, the light ring will illuminate with a voice prompt to indicate that your robot has been woken up.

Method 2: Attach your robot to the Auto-Empty Station. The LED indicator on the Auto-Empty Station will turn off and your robot will automatically turn on and start charging.

Please note:

- Your robot cannot be turned on when the battery is insufficient. It will automatically turn on when it is attached to the Auto-Empty Station.
- Your robot will only start cleaning tasks when the battery level is more than 30 %.
- Please ensure the Auto-Empty Station is always connected to a power source.

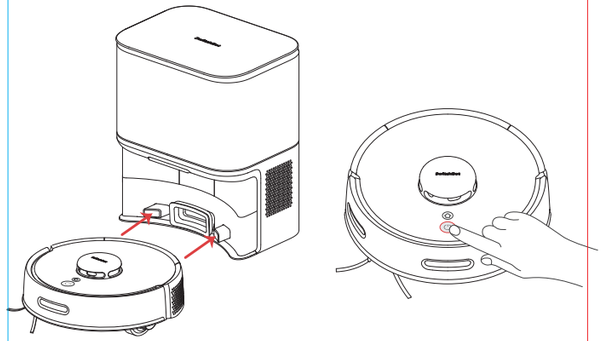

Setting Up Your Mini Robot Vacuum K10+

Open our app, tap the "+" button found in the top right-hand corner of the home page, find the Mini Robot Vacuum K10+ icon and select, then follow the step-by-step instructions to add your robot.

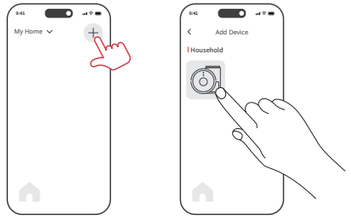

Cleaning

Vacuuming

1. Remove excess clutter from floors before cleaning, for example, socks, shoes and cords etc.

2. Install the Edge-Sweeping Brush on your robot. Align and press, you will hear a clicking sound when it is installed correctly.

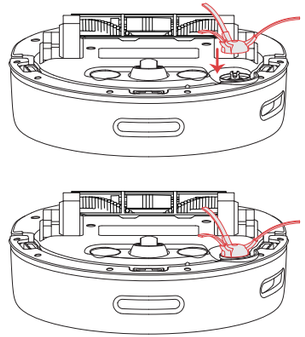

3. Press the CLEAN button to start cleaning, or control via our app.

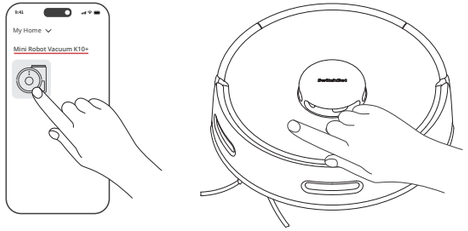

Mopping

1. Open the Canister Lid and take the mopping pad plate off.

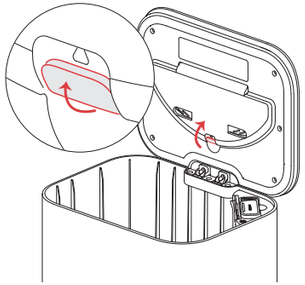

2. Attach a mopping cloth to the mopping pad plate.

Option 1: Use the original mopping cloth

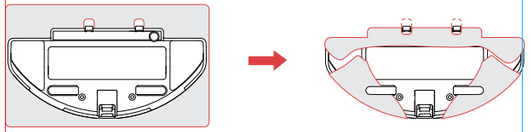

Option 2: Use a general mopping cloth

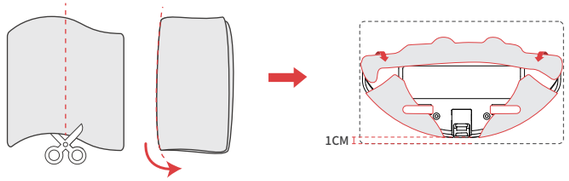

Please note: Dimensions of a general mopping cloth is usually approx. 30 × 20 cm (11.8 × 7.9 in.), while your robot's mopping pad plate is compatible with 20 × 15 cm (7.9 × 5.9 in.) cloth. If you use a general mopping cloth, fold or cut it in half before attaching to the mopping pad plate.

3. Install the mopping pad plate at the bottom of the Multi-Surface Brush covering the brush.

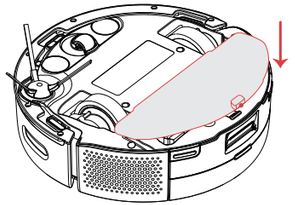

4. Press the CLEAN button to start mopping, or control via our app.

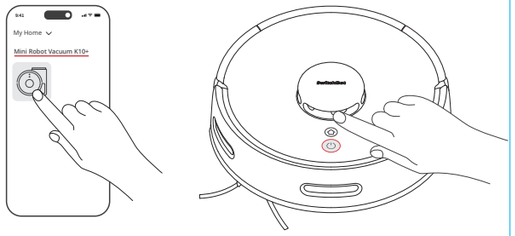

Please note:

①Set no-go zones in the app so your robot won't mop and wet areas like carpets.

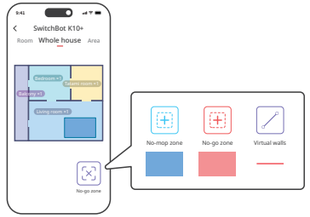

②The mopping cloth will become dry after 20 or 30 minutes of use. It is recommended to only mop designated rooms or areas set in the app.

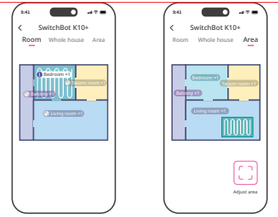

③The dry mopping cloth can still wipe away some dust or hair, but it is not as effective as when it's wet. Please replace the dry mopping cloth in time when mopping.

Charging

To send your robot back to the Auto-Empty Station and recharge, press the HOME button on your robot or control via our app.

When pausing: tap HOME once, your robot will return to the Auto-Empty Station to recharge.

When cleaning: tap HOME once, your robot will pause cleaning; tap again, your robot will return to the Auto-Empty Station to charge and collect dust.

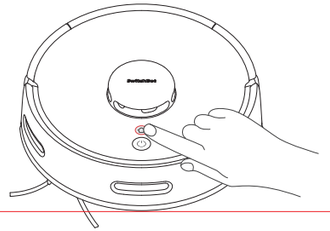

Troubleshooting

1. If your robot bumps into furniture or walls frequently while cleaning, check if you've removed the protective foam strips on both sides. These protective foam strips may stop the robot from normal contracting and rebouncing when bumping into obstacles.

2. If your robot fails to connect to Wi-Fi, follow the instructions below and try again.

- Check whether the ON/OFF Switch has been switched to "I".
- Your robot can only connect to a 2.4GHz Wi-Fi. 5GHz Wi-Fi is not supported. Check your Wi-Fi band if your robot is unable to connect to the Internet.
- Before configuring your network, please disable mobile data on your phone and connect via Wi-Fi only.
- For smartphones running iOS 13 or above, please enable location permissions for our app when using.
- For phones using Android operating systems, please make sure all permissions are allowed when using our app.
- Make sure wireless SSID broadcast is enabled on your router.
- Make sure your robot's Wi-Fi is not in your router's blacklist.

3. Your robot will tell you when something is wrong by playing an audio alert and turning the light ring into orange. You can get more information, including video tutorials via our app.

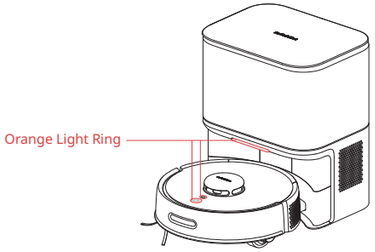

4. If you are not sure whether your robot is in paused state or has finished a cleaning task, check via our app.

Please visit our website or scan the QR code below for more information.
https://support.switch-bot.com/hc/en-us/categories/12968105432855

Care and Maintenance

To keep your robot running at peak performance, perform the procedures on the following pages.
If you notice the robot picking up less debris from your floor, empty the bin, clean the brushes, and clean or replace the filter if needed. Replace the dust bag in time when it is full.

Part	Care Frequency	Replacement Frequency
Bags		Every 70 days
Bin	Wash bin as needed	
Cliff Sensor	Clean once a month or when prompted by the app	
Filter	Clean once a month or when prompted by the app	Every 2 or 3 months
Front Caster Wheel	Clean once a month. Clean more if your pet sheds a lot.	Every 12 months
Edge-Sweeping Brush	Clean once a month. Clean more if your pet sheds a lot.	Every 12 months
Multi-Surface Brush	Clean once a month. Clean more if your pet sheds a lot.	Every 12 months

Cleaning the Mopping Pad Plate

1. Remove the mopping pad plate and throw away the disposable mopping cloth. Wash the pad plate with warm water.

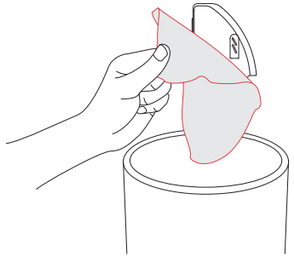

2. Place the mopping pad plate back in the canister lid.

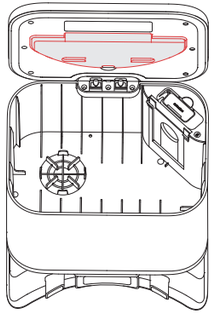

Washing the Bin

1. Open the faceplate and remove bin.

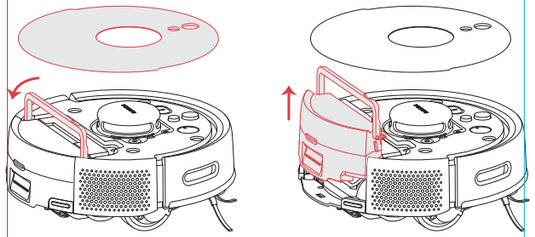

2. Press the red area (marked in the picture) to open bin door and empty bin.

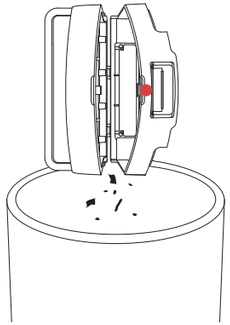

3. Rinse the bin using warm water and dry the bin.

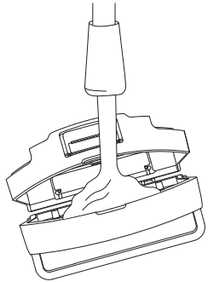

4. Place the bin back in the robot.

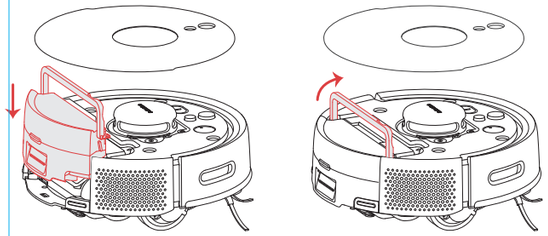

Cleaning the Filter

1. Remove the bin. Remove the filter by grasping the end and pulling out.

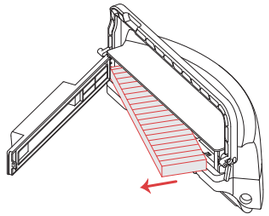

2. Remove the debris by tapping the filter against your trash container.

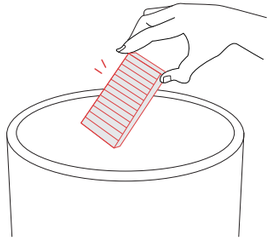

3. Reinsert filter and place bin back in the robot.

Please note: Your robot will not run if the filter is not installed correctly. Replace the filter every 3 months.

Cleaning the Edge-Sweeping Brush

1. Pull to remove the Edge-Sweeping Brush.

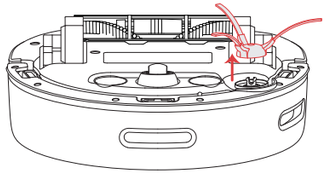

2. Remove any hair or debris and replace the brush.

3. Align and reinstall the brush.

Please note: Replace the Edge-Sweeping Brush every one year.

Cleaning the Front Caster Wheel

1. Pull firmly on the front wheel to remove it from the robot.

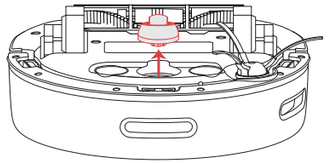

2. Remove any debris from inside the wheel cavity.

3. Reinstall the wheel. Make sure the wheel clicks into place.

Please note: Replace the Front Caster Wheel every one year.

Cleaning the Multi-Surface Brush.

1. Press two release tabs and open the brush cover.

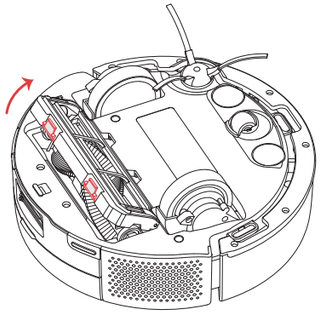

2. Remove the brush from the robot by holding its left end. Remove the brush caps from the end. Use the small cleaning tool to remove any hair and debris that has collected beneath the caps. Reinstall the brush cap.

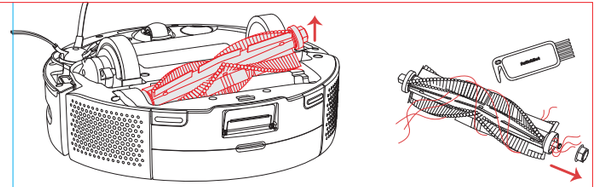

3. Reinstall the brush in the robot, and install the brush cover back.

Please note: Replace the Multi-Surface Brush every 12 months.

Cleaning the Sensors and Charging Contacts

Wipe sensors and charging contacts with a clean, dry cloth.

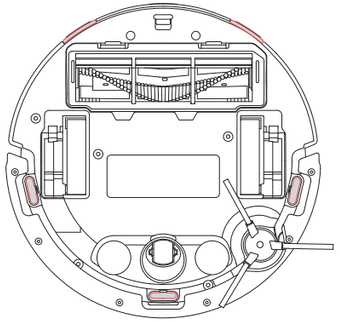

Please note: Do not spray cleaning solution or water onto the sensors, sensor openings or charging contacts.

Replacing the Dust Bag

1. Lift up on the canister lid to open.

2. Pull up on the hard paper card to remove the bag from the canister.

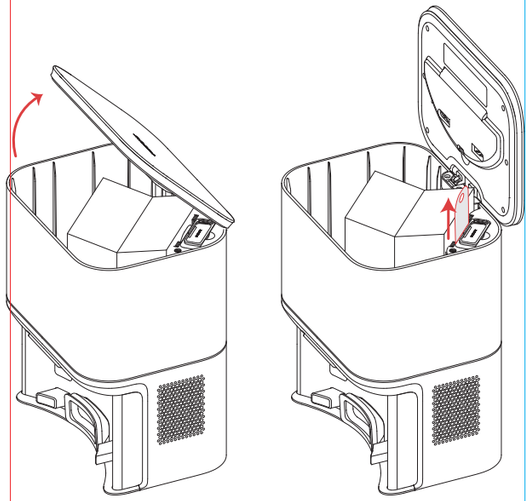

3. Discard the used bag.

4. Install a new bag, sliding the card into the guide rails. Press down on the lid making sure it is completely closed.

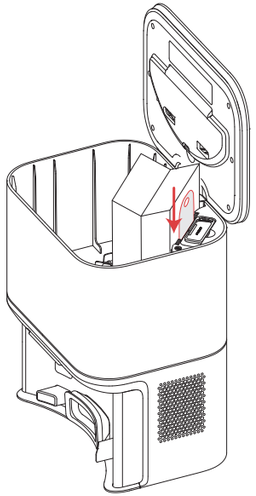

Safety Information

Warning

Before using this product, please finish reading the safety instructions. Any operation that does not follow the steps laid out in our manual may cause serious injury or damage.

- This product can be used and cleaned only if the user has read through this user manual and understands the hazards involved.
- Children and pets should be supervised when device is in operation.
- This product can only be used with the authorized adapter, power supply cord, plug, battery and charging dock. Use of any unauthorized accessories may cause the product to generate heat, smoke, catch fire, or explode.
- Stop using this product if your robot or any accessory is damaged. Please contact SwitchBot Customer Service to purchase or replace. Except for designated repair technicians authorized by SwitchBot, no other person shall disassemble, repair, or modify this product.
- Do not place objects (including children and pets) on this device at any time.
- Only use and store this product indoors in a dry location with a temperature of 0 ℃ / 32 ℉ to 40 ℃ / 104 ℉.
- Always disconnect the robot from the Auto-Empty Station before cleaning or maintaining it.
- Do not handle the robot or the Auto-Empty Station with wet hands or wipe the product with a wet cloth.
- Do not wash your robot or the Auto-Empty Station under running water.
- To ensure safe operation, do not use this product in a suspended area (such as a second floor loft, open balcony, on the top of furniture, etc.) without a physical barrier present.
- Ensure the Auto-Empty Station is placed at least 1.5 meters / 4.9 feet away from stairs, other open areas and heat sources (such as heaters).
- Do not short-circuit the battery by allowing metal objects to contact battery terminals or become immersed in liquid. Do not subject batteries to mechanical shock.

Precautions

- This product is used for floor cleaning in a home environment. Do not use it in outdoor, non-grounded, commercial, or industrial environments.
- Before using this product, make sure there are no cords present that may obstruct it.
- Remove fragile or valuable objects (such as vases) on the floor to prevent your robot from damaging them.
- Place the small cleaning tool in an area out of reach of children.
- Do not let hair, fingers or any other body parts near the dust suction port when in operation.
- Do not use this product to clean sharp objects (such as decoration debris, glass, or iron nails).
- Do not use this product to clean burning or smoking objects (such as cigarette butts).

LED Indicator Light

Light Ring Indicator	Descriptions
Solid White	The robot is fully charged or cleaning properly.
Slowly Flashing White	The robot is charging.
Blinking White	The robot is ready to configure Wi-Fi.
Solid Orange	Low battery.
Blinking Orange	The robot has run out of power or an error occured.

Network Reconfiguration

Press and hold the HOME and CLEAN button for 3 seconds to reconfigure your Wi-Fi network.

Firmware Upgrades

In order to improve user experience, we will regularly release firmware updates to introduce new functions and solve any software defects that may occur during usage. When a new firmware version is available, we will send an upgrade notification to your account via our app. When upgrading, please make sure your product has sufficient battery and make sure your smartphone is within range to prevent interference.

Specifications

Mini Robot Vacuum K10+

Color: White
Material: ABS
Size: 248 × 248 × 92 mm (9.8 × 9.8 × 3.6 in.)
Weight: Approx. 2.3 kg (81.1 oz.)
Rated Power: 30 W
Rated Voltage: 14.4 V
Battery Capacity: 3200 mAh
Operating Temperature: 0 ℃ to 40 ℃ (32 ℉ to 104 ℉)
Network Connectivity: 2.4 GHz Wi-Fi, Bluetooth 4.2
System Requirements: iOS 11+, Android OS 5.0+

Auto-Empty Station

Size: 261 × 210 × 323 mm (10.3 × 8.3 × 12.7 in.)
Rated Power: 950 W
Rated Input: 24 V⎓1 A

Warranty Information

Warranty

We warrant to the original owner of the product that the product will be free from defects in materials and workmanship for a period of one year from the date of purchase. Please note that this limited warranty does not cover:

1. Products submitted beyond the original one-year limited warranty period.
2. Products on which repairs or modifying have been attempted.
3. Products subjected to falls, extreme temperatures, water, or other operating conditions outside the product specifications.
4. Damage due to natural disaster (including but not limited to lightning, flood, tornado, earthquake, or hurricane, etc.).
5. Damage due to misuse, abuse, negligence or casualty (e.g. fire).
6. Other damage that is not attributable to defects in the manufacture of product materials.
7. Products purchased from unauthorized resellers.
8. Consumable parts (including but not limited to batteries).
9. Natural wear of the product.

Contact & Support

Setup and Troubleshooting: support.switch-bot.com

Support Email: support@switch-bot.com

Feedback: If you have any concerns or problems when using our products, please send feedback via our app through the Profile > Help & Feedback page.

CE/UKCA Warning

To comply with RF exposure requirements, a minimum separation distance of 20 cm must be maintained between the user's body and the device, including the antenna. Use only the supplied or an approved antenna. This device is in compliance with the essential requirements and other relevant provisions of directive 2014/53/EU. All essential radio test suites have been carried out.

CE DOC
Hereby, Woan Technology (Shenzhen) Co., Ltd. declares that the radio equipment type W3011020/W3011030 is in compliance with Directive 2014/53/EU. The full text of the EU declaration of conformity is available at the following internet address: support.switch-bot.com

UKCA DOC
Hereby, Woan Technology (Shenzhen) Co., Ltd. declares that the radio equipment type W3011020/W3011030 is in compliance with UK Radio Equipment Regulations (SI 2017/1206). The full text of the UK declaration of conformity is available at the following internet address: support.switch-bot.com

This product can be used in EU member states and UK.

Manufacturer: Woan Technology (Shenzhen) Co., Ltd.
Address: Room 1101, Qiancheng Commercial Center, No. 5 Haicheng Road, Mabu Community, Xixiang Subdistrict, Bao'an District, Shenzhen, Guangdong, P.R.China, 518100

Operation frequency:
Wi-Fi: 2412 MHz to 2472 MHz
BLE: 2402 MHz to 2480MHz
Operation temperature: 0 to 40 ℃

FCC Warning

This device complies with Part 15 of the FCC Rules. Operation is subject to the following two conditions:
(1) This device may not cause harmful interference.
(2) This device must accept any interference received, including interference that may cause undesired operation.

NOTE: This equipment has been tested and found to comply with the limits for a Class B digital device, pursuant to part 15 of the FCC Rules. These limits are designed to provide reasonable protection against harmful interference in a residential installation.
This equipment generates uses and can radiate radio frequency energy and, if not installed and used in accordance with the instructions, may cause harmful interference to radio communications. However, there is no guarantee that interference will not occur in a particular installation. If this equipment does cause harmful interference to radio or television reception, which can be determined by turning the equipment off and on, the user is encouraged to try to correct the interference by one or more of the following measures:

- Reorient or relocate the receiving antenna.
- Increase the separation between the equipment and receiver.
- Connect the equipment into an outlet on a circuit different from that to which the receiver is connected.
- Consult the dealer or an experienced radio/TV technician for help.

NOTE: The manufacturer is not responsible for any radio or TV interference caused by unauthorized modifications to this equipment. Such modifications could void the user's authority to operate the equipment.
This equipment complies with FCC radiation exposure limits set forth for an uncontrolled environment. This equipment should be installed and operated with minimum distance 20 cm between the radiator and your body.