www.switch-bot.com

V1.0-2308

SwitchBot
Outdoor Spotlight Cam 2K

User Manual

Please read this user manual carefully before using your device.

Contents

1. Package Contents ---- 01
2. List of Components ---- 02
3. Specifications ---- 04
4. Preparation ---- 05
5. Precautions ---- 06
6. Getting Started ---- 07
7. Installation ---- 08
8. Safety Information ---- 15
9. LED Indicator Light ---- 17
10. Features ---- 19
11. Powering On/Off And Resetting Factory Settings ---- 21
12. Firmware Upgrades ---- 22
13. Troubleshooting ---- 23
14. Disclaimer ---- 25
15. Warranty ---- 26
16. Contact & Support ---- 27

Package Contents

Outdoor Spotlight Cam 2K × 1

Base × 1

User Manual × 1

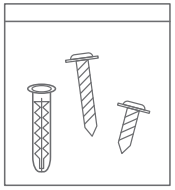

Screw Pack × 2

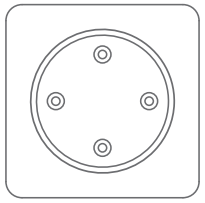

Adhesive Wall Mount × 1

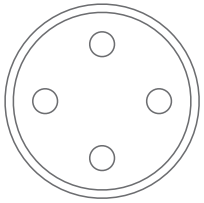

Alignment Sticker × 1

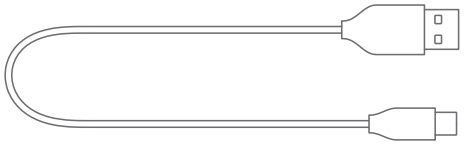

Type-C Cable (1 m [3.3 ft.]) × 1

List of Components

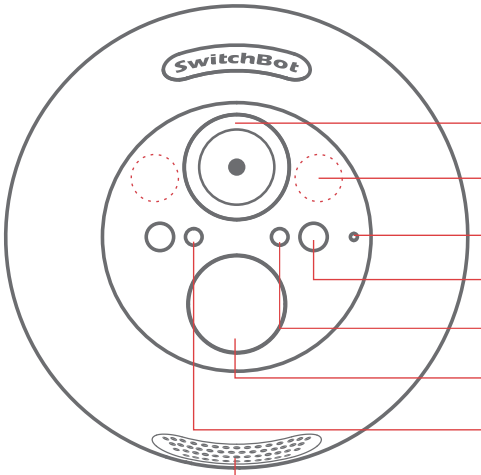

Camera Lens
Infrared Light
Microphone
Spotlight
Light Sensor
PIR Motion Sensor
LED Indicator Light
Speaker

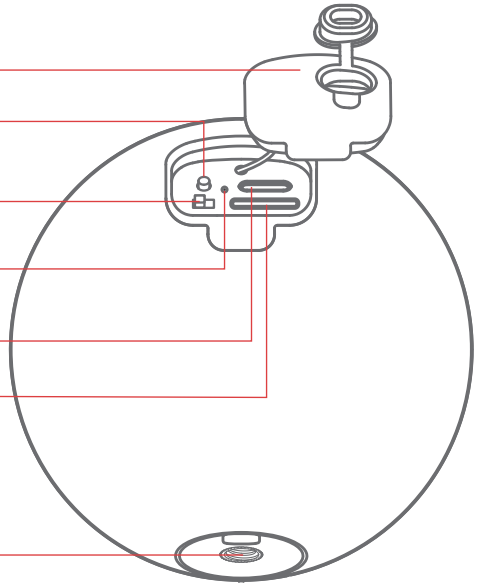

Rubber Plug
Reset Button
ON/OFF Switch
Battery Charging Indicator Light
Type-C Charging Port
microSD Card Slot
Tapped Hole

Screw Package Contents

M3 × 6 mm
(#5 × 1/4")
Screw × 4

M3 × 20 mm
(#5 × 25/32")
Screw × 4

Drywall Anchor
× 4

Base

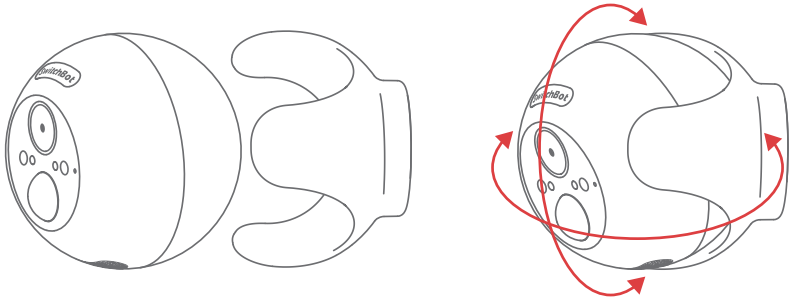

The base of your Outdoor Spotlight Cam 2K is detachable. You can also flexibly adjust the angle of your camera to monitor the area you want.

Specifications

Model: W4102000
Color: White
Material: ABS with UV-resistant coating
Size: 86 × 86 × 83 mm (3.4 × 3.4 × 3.3 in.)
Weight: 320 g (11.3 oz.)
Power: 5 V ⎓ 2 A
Operating Temperature: −20 °C to 50 °C (−4 °F to 122 °F)
Video Resolution: 2K
Field of View: 137° diagonal
Storage: Supports FAT32 formatted microSD card up to 256GB (Not included)
Night Vision: 10 m
Operating Humidity: ≤ 95 % RH
Network Connectivity: 802.11 b/g/n, 2.4 GHz; Bluetooth Low Energy 4.2
Battery Capacity: 10000 mAh
PIR Detection Distance: 7.5 m (24.6 ft.)
PIR Detection Angle: 110°
Weather Resistance: IP65

Preparation

You will need:

• A smartphone or tablet using Bluetooth 4.2 or later.
• The latest version of our app, downloadable via the Apple App Store or Google Play Store.
• A SwitchBot account, you can register via our app or sign in to your account directly if you already have one.

Download on the App Store

GET IT ON Google Play

iOS 11.0+

Android OS 5.0+

Precautions

1. Avoid placing the camera under direct sunlight.

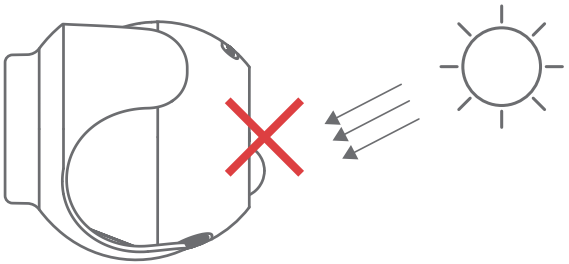

2. Make sure high traffic areas are out of the camera's view.

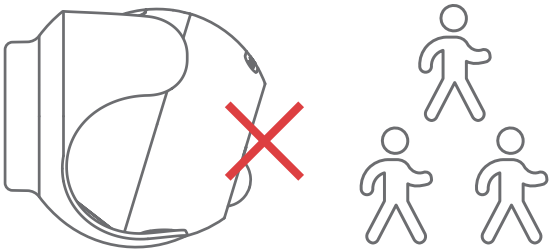

3. Do not place the camera near any heat sources.

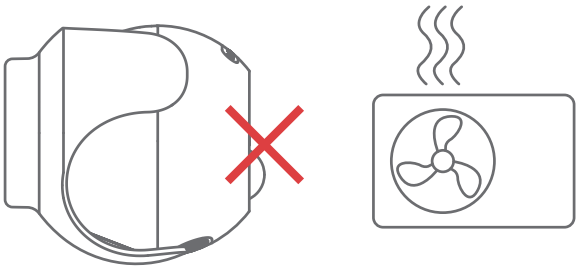

Getting Started

1. Add your camera to the SwitchBot app

Open the SwitchBot app and sign in to your account. Tap "+" at the top right of the home page, find the Outdoor Spotlight Cam 2K icon and select, then follow the instructions to add your camera.

2. Fully charge your camera

Please fully charge your camera battery before mounting it. Remove the rubber plug at the back of your camera, find the Type-C charging port and connect it to a power supply with the USB cable included.

Note:

- Use an adapter with 5 V⎓2 A output or higher.
- The battery charging indicator light will be solid red when your camera is charging and turn solid green when your camera is fully charged.

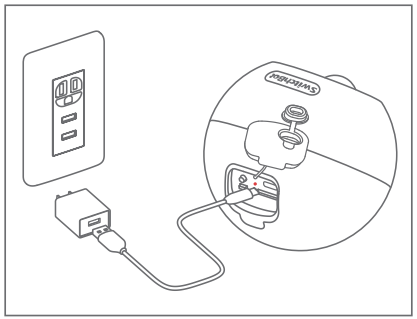

Installation

What you need to know before installation:

- To ensure your camera works normally after installation, it is recommended that you test the Wi-Fi connection of the area you'd like to install it. Place your camera in the area and then check the video quality and fluency via the app.
- The perfect height and angle to install your camera are shown in the picture below:
Height: 2.5 m (8.2 ft.) above the ground
Angle: 15° downwards vertically
- You can keep your camera plugged in by connecting it to a power supply or a Solar Panel using the USB cable. Please select an appropriate installation location based on the cable length.
- When you connect your camera to a Solar Panel, make sure to place the Solar Panel in an area that can receive direct sunlight.

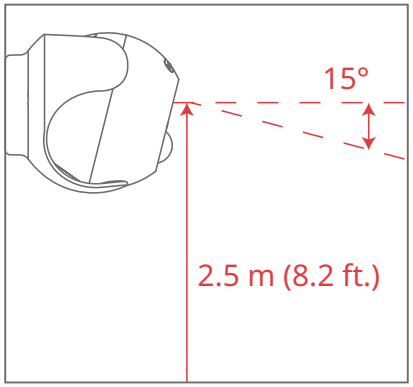

Method 1: Install Using Screws

What you'll need for installation: an electric drill, a screwdriver and a rubber hammer.

For outdoor usage, we recommend that you install your camera using screws to prevent it from falling accidentally. Concrete or other hard surfaces can be challenging for drilling. If you are not experienced with drilling into a particular type of wall, you may want to consider consulting a professional.

a. Confirm installation position

Stick the alignment sticker on the spot where you plan to install your camera.

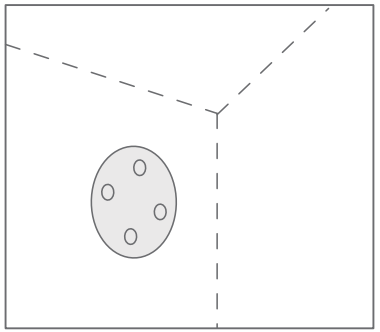

b. Choose drill bit size and mount the base

Prepare a proper-sized drill bit before drilling.

①When mounting on more rugged surfaces like concrete or brick:
Drill holes with the 6 mm (15/64") sized drill bit according to the alignment sticker, hammer the drywall anchors into the wall, then screw the base using four M3 × 20 mm (#5 × 25/32") screws firmly to the wall.

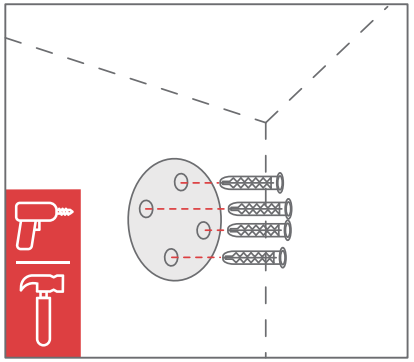

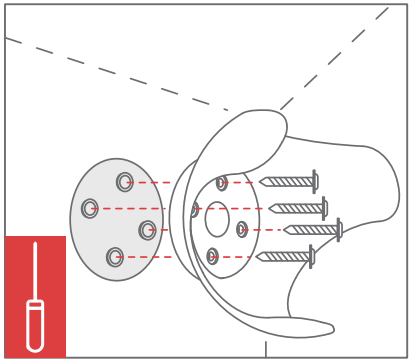

②When mounting on surfaces like wood or plaster: Drill holes with the 2.5 mm (7/64'') sized drill bit according to the alignment sticker, then screw the base using four M3 × 20 mm (#5 × 25/32'') screws to the wall. Make sure the base is firmly mounted.

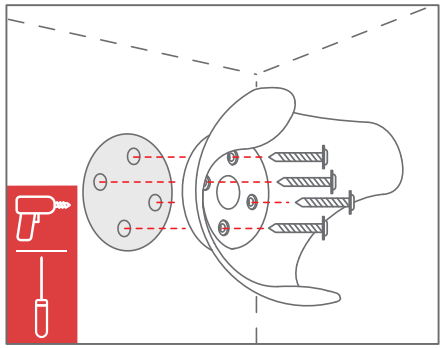

c. Attach your camera to the base

Attach your camera to the base. You can adjust the camera angle to get the view you want based on the live video shown on the app.

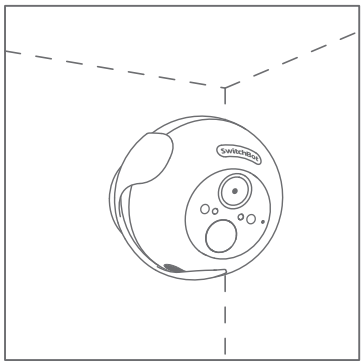

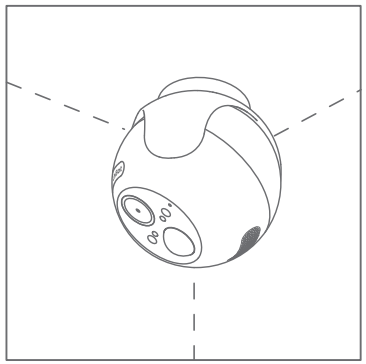

Method 2: Install Using Adhesive Wall Mount

What you'll need for installation: a cleaning cloth, a screwdriver

Adhesive wall mount can only stick firmly to smooth surfaces like glass, ceramic tile, smooth door surface and wallpaper. Please clean the surface first before installation.

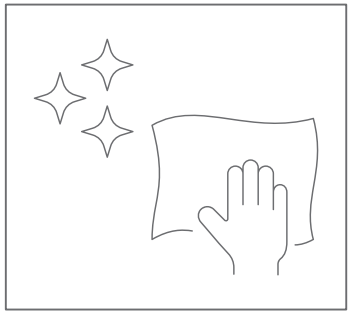

a. Confirm installation position

Stick the adhesive wall mount to the choosen spot, squeeze out the gases between the wall mount and the wall, then press for 2 minutes to secure it. (In cold weather, you can use a blow dryer, hot water bottle or a fan heater to heat the adhesive wall mount up before pressing it.)

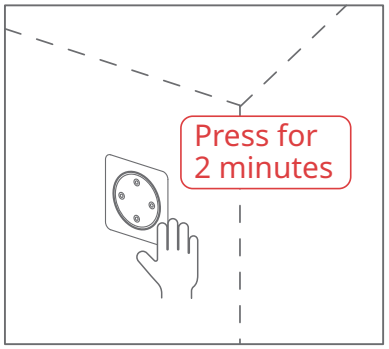

b. Mount the base

Screw the base into the wall mount using four M3 × 6 mm (#5 × 1/4'') screws. Make sure the base is firmly mounted.

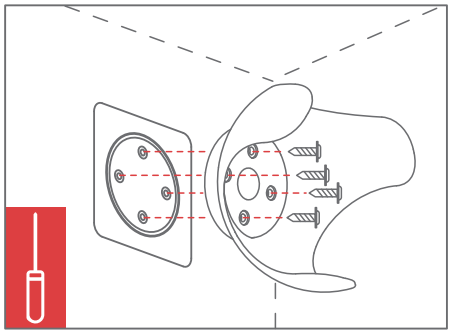

c. Attach your camera to the base

Attach your camera to the base. You can adjust the camera angle to get the view you want based on the live view shown on the app.

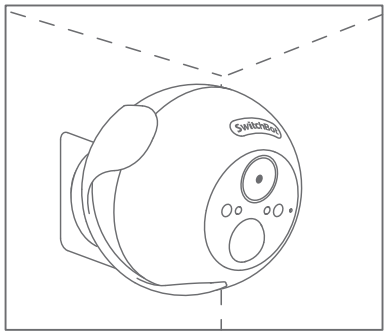

Method 3: Mount your camera on a stand

You can also mount your Outdoor Spotlight Cam 2K on a camera stand (not included). Align the tapped hole at the bottom of your camera with the screw on the stand, then rotate your camera to tighten it onto the stand. Make sure your camera is firmly mounted, then adjust the stand to get the view you want based on the live view shown on the app.

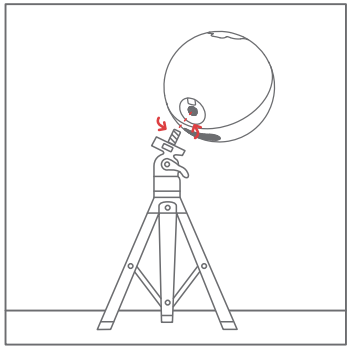

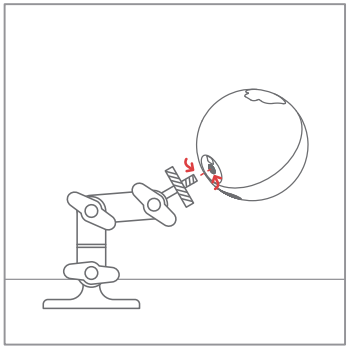

Safety Information

For your safety, please read the instructions carefully before use.

• The battery is built-in, so do not remove it from the camera.
• Charge the rechargeable battery with a standard and high-quality DC 5V battery charger or a SwitchBot Solar Panel. Do not charge the battery with solar panels from any other brands.
• Do not use the product in extreme weather conditions (extreme cold or hot). Extreme weather may result in malfunction or damage to the product. The operating temperature is from −20 °C to 50 °C (−4 °F to 122 °F).
• Keep the product and the cable connected away from any heat source, like heating equipments. The product shell and cable coating may melt because of the heat, which may result in fire, electric shock or other damage.
• Do not place this product under direct sunlight or places of high humidity. Otherwise, the inner temperature of the product may rise and result in fire or other damage.

• Do not plug or unplug the charger or operate the product with wet hands.
• Do not place the USB cable near infants, which could create a choking hazard.
• Do not charge, use or store the battery near any ignition sources, such as fire or heaters.
• Do not use the product in a place where there is oil stain and insects.
• Do not wash, disassemble or modify the product.
• When mounted high, please secure the product firmly to prevent any damage or injury caused by accidental dropping.
• Protect the product from heavy snow in cold winter. Snow accumulation on the product may cause it to fall and cause injuries.
• Keep accessories out of the reach of infants and pets. Otherwise they could accidentally swallow small parts of accessories.

LED Indicator Light

LED Indicator Light (Wi-Fi not connected)		Description
Red	Flashes rapidly	Ready to configure Wi-Fi
Green	Flashes rapidly	Connecting Wi-Fi
Green	Stays lit up	Device online
Red + Green	Both flash rapidly	Failed to connect to the router
Red + Green	Green light flashes rapidly, and red light stays lit up	Failed to connect to the server
Red + Green	Both flash slowly	Firmware upgrading

LED Indicator Light (Wi-Fi connected)		Description
Green	Flashes rapdily	Device starting
Green	Stays lit up	Device online
Green + Red	Green light flashes rapidly, and red light stays lit up	Device starting (USB charging)
Green + Red	Both stay lit up	Device online (USB charging)

Features

Motion Detection

When Motion Detection is turned on, Outdoor Spotlight Cam 2K will take a photo and record a video clip of any moving objects detected (requires turning on Recording) and send you a notification via the app (requires turning on Allow Notifications).

Third-party Integration

Outdoor Spotlight Cam 2K can connect to Amazon Alexa and Google Assistant for voice control.

- After adding the device, please ensure your phone has a normal network connection.
- Go to Outdoor Spotlight Cam > Settings > Cloud Services in the app and link your SwitchBot account to the third-party services.

Alexa, show my Outdoor Spotlight Cam.

Hey Google, show my Outdoor Spotlight Cam.

AI Human/Pet Alerts

You can turn on this feature at Outdoor Spotlight Cam 2K > Settings > Motion Detection. Aftering turning on, your Outdoor Spotlight Cam will differentiate human and animals and send you notifications when detecting them.

Dual Light Night Vision

Outdoor Spotlight Cam 2K has both an infrared light and a white spotlight that help deliver a clearer night scene. Infrared light will change the image to black and white while spotlight helps maintain a color video. You can set this mode as Auto, so when the camera senses the surrounding is dark, it will auto turn on infrared light or spotlight (you can set via the app) to deliver a clearer dark scene.

Dismantling Alarm

When Dismantling Alarm is turned on, Outdoor Spotlight Cam 2K will emit sound and alarm you by sending notifications when it is removed from the base. You can adjust the alarm sensitivity to prevent frequent false trigger. Please visit https://support.switch-bot.com/hc/en-us/sections/6211963497111 for more information.

Powering On/Off And Resetting Factory Settings

Powering On/Off

Flip the ON/OFF switch to ON to power on your camera and OFF to power off.

Resetting Factory Settings

Press and hold the Reset button for 3 to 5 seconds until you hear a prompt tone. Now your camera has been reset and is ready to reconfigure Wi-Fi.

Firmware Upgrades

In order to improve user experience, we will regularly release firmware updates to introduce new functions and solve any software defects that may occur during usage. When a new firmware version is available, we will send an upgrade notification to your account via our app.
When upgrading Wi-Fi firmware, please make sure your product has sufficient battery and normal Wi-Fi connection, then follow the instructions to upgrade.
When upgrading bluetooth firmware, please make sure your smartphone is within range to prevent interference, then follow the instructions to upgrade.

Troubleshooting

Q: Event notifications are too frequent.

A:
1. Avoid placing your camera under direct sunlight.
2. Make sure high traffic areas are out of your camera's view.
3. Do not place your camera near any heat sources.

Q: Cannot connect to the internet.

A:
1. Make sure your camera is connected to a 802.11b/g/n, 2.4 GHz, IPV4 wireless network.
2. Check if your camera is in the blacklist of your router.
3. Check if your camera is too far from your router. If so, place your camera closer to your router to ensure a good Wi-Fi connection.

Q: Battery duration is short.

A: Place your camera at a location where it reduces power consumption from false alarms due to 1) heavy traffic 2) heat sources such as sunlight or vehicles.

Please visit our website or scan the QR code below for more information.
https://support.switch-bot.com/hc/en-us/sections/6211978254999

Disclaimer

• This product is designed to acquire the view of a specific monitored area. It cannot prevent crimes from taking place.
• We are not responsible for any consequential, incidental, exemplary, or special damage, including any damage for lost data or lost profiles, arising from or relating to the product.
• Privacy and portrait rights of any person filmed or recorded need to be carefully considered. We are not responsible for any disputes, harm or damage caused by using the image or video recorded by the product.
• This product is not a suitable monitoring device for long-term medical care. We are not responsible for any accidents, damage or injuries caused by using the product.

Warranty

We warrant to the original owner of the product that the product will be free from defects in materials and workmanship for a period of one year from the date of purchase. Please note that this limited warranty does not cover:

1. Products submitted beyond the original one-year limited warranty period.
2. Products on which repairs or modifying have been attempted.
3. Products subjected to falls, extreme temperatures, water, or other operating conditions outside the product specifications.
4. Damage due to natural disaster (including but not limited to lightning, flood, tornado, earthquake, or hurricane, etc.).
5. Damage due to misuse, abuse, negligence or casualty (e.g. fire).
6. Other damage that is not attributable to defects in the manufacture of product materials.
7. Products purchased from unauthorized resellers.
8. Consumable parts (including but not limited to batteries).
9. Natural wear of the product.

Contact & Support

Setup and Troubleshooting:
support.switch-bot.com

Support Email:
support@wondertechlabs.com

Feedback:
If you have any concerns or problems when using our products, please send feedback via our app through the Profile > Feedback page.

CE Warning

To comply with RF exposure requirements, a minimum separation distance of 20 cm must be maintained between the user's body and the device, including the antenna. Use only the supplied or an approved antenna. This device is in compliance with the essential requirements and other relevant provisions of directive 2014/53/EU. All essential radio test suites have been carried out.

CE DOC
Hereby, Woan Technology (Shenzhen) Co., Ltd. declares that the radio equipment type W4102000 is in compliance with Directive 2014/53/EU. The full text of the EU declaration of conformity is available at the following internet address: support.switch-bot.com

This product can be used in EU member states and UK.

Manufacturer: Woan Technology (Shenzhen) Co., Ltd.
Address: Room 1101, Qiancheng Commercial Center, No. 5 Haicheng Road, Mabu Community, Xixiang Subdistrict, Bao'an District, Shenzhen, Guangdong, P.R.China, 518100

EU Importer Name: Amazon Services Europe
Importer Address: 38 Avenue John F Kennedy, L-1855 Luxembourg

Operation frequency
Wi-Fi: 2412 MHz to 2472 MHz
BLE: 2402MHz to 2480MHz
Operation temperature: -20 ℃ to 50 ℃

FCC Warning

This device complies with Part 15 of the FCC Rules. Operation is subject to the following two conditions:
(1) This device may not cause harmful interference.
(2) This device must accept any interference received, including interference that may cause undesired operation.

NOTE: This equipment has been tested and found to comply with the limits for a Class B digital device, pursuant to part 15 of the FCC Rules. These limits are designed to provide reasonable protection against harmful interference in a residential installation.
This equipment generates uses and can radiate radio frequency energy and, if not installed and used in accordance with the instructions, may cause harmful interference to radio communications. However, there

is no guarantee that interference will not occur in a particular installation. If this equipment does cause harmful interference to radio or television reception, which can be determined by turning the equipment off and on, the user is encouraged to try to correct the interference by one or more of the following measures:
• Reorient or relocate the receiving antenna.
• Increase the separation between the equipment and receiver.
• Connect the equipment into an outlet on a circuit different from that to which the receiver is connected.
• Consult the dealer or an experienced radio/TV technician for help.

NOTE: The manufacturer is not responsible for any radio or TV interference caused by unauthorized modifications to this equipment. Such modifications could void the user's authority to operate the equipment.

FCC Radiation Exposure Statement
This equipment complies with FCC radiation exposure limits set forth for an uncontrolled environment. This equipment should be installed and operated with minimum distance 20 cm between the radiator and your body.

IC Warning

This device contains license-exempt transmitter(s)/ receiver(s) that comply with Innovation, Science and Economic Development Canada's license-exempt RSS(s). Operation is subject to the following two conditions:
(1) This device may not cause interference.
(2) This device must accept any interference, including interference that may cause undesired operation of the device.

L'émetteur/récepteur exempt de licence contenu dans le présent appareil est conforme aux.
CNR d'Innovation, Sciences et Développement économique Canada applicables aux appareils radio exempts de licence. L'exploitation est autorisée aux deux conditions suivantes :
(1) L'appareil ne doit pas produire de brouillage;
(2) L'appareil doit accepter tout brouillage radioélectrique subi, même si le brouillage est susceptible d'en compromettre le fonctionnement.

IC Radiation Exposure Statement
This equipment complies with the IC radiation exposure limits established for uncontrolled environment. This equipment must be installed and operate at least 20cm from a radiator or your body.
Cet équipement est conforme aux limites d'exposition aux rayonnements de la IC établies pour unenvironnement non contrôé. Cet équipement doit être installé et fonctionner à au moins 20cmde distance d'un radiateur ou de votre corps.