SAR TEST REPORT

Report Reference No.....:	**JTT201612023**	
FCC ID.....:	**2AKXRWG97508GBT**	
Compiled by (position+printed name+signature)..:	File administrators Kevin Liu	Kevin . Liu
Supervised by (position+printed name+signature)..:	Project Engineer Kevin Liu	Kevin . Liu
Approved by (position+printed name+signature)..:	RF Manager Eric Wang	Eric Wang
Date of issue.....:	December 26, 2016	
Testing Laboratory Name .....:	**Shenzhen Yidajietong Test Technology Co., Ltd.**	
Address.....:	3/F., Building 12, Shangsha Innovation & Technology Park, Futian District, Shenzhen, Guangdong, China	
Applicant's name.....:	**MEGATOP ZONA LIBRE, S.A.**	
Address.....:	CALLE 15Y CALLE E, EDIF, COHEN Y ATTIA LOCAL NO.7 ZONA LIBRE DE COLON REP. DE PANAMA	
Test specification ..... **:**		
Standard .....:	**IEEE 1528:2013** **47CFR §2.1093**	
TRF Originator.....:	SHENZHEN JIETONG INFORMATION TECHNOLOGY CO., LTD	
Master TRF.....:	Dated 2014-01	

SHENZHEN JIETONG INFORMATION TECHNOLOGY CO., LTD All rights reserved.
This publication may be reproduced in whole or in part for non-commercial purposes as long as the SHENZHEN JIETONG INFORMATION TECHNOLOGY CO., LTD as copyright owner and source of the material. SHENZHEN JIETONG INFORMATION TECHNOLOGY CO., LTD takess no responsibility for and will not assume liability for damages resulting from the reader's interpretation of the reproduced material due to its placement and context.

Test item description .....:	**TABLET**
Trade Mark .....:	WiiGO AAA/TOPSONIC
Manufacturer .....:	**VICSTAR INT'L LIMITED**
Model/Type reference.....:	TS9750/8G-BT
Listed Models .....:	WG9750/8G-BT
Ratings.....:	DC 3.70V
EUT Type .....:	Production Unit
Exposure category.....:	General population / Uncontrolled environment
Result.....:	**PASS**

T E S T R E P O R T

Test Report No. :	JTT201612023	December 26, 2016 Date of issue

Equipment under Test	:	**TABLET**
Model /Type	:	TS9750/8G-BT
Listed Models	:	WG9750/8G-BT
Applicant	:	**MEGATOP ZONA LIBRE, S.A.**
Address	:	CALLE 15Y CALLE E, EDIF, COHEN Y ATTIA LOCAL NO.7 ZONA LIBRE DE COLON REP. DE PANAMA
Manufacturer	:	**VICSTAR INT'L LIMITED**
Address	:	SUIT A,15/F HILLIER COMMERCIAL BUILDING, 65-67 BONHAM STRAND EAST,SHEUNG WAN,HONGKONG, CHINA

Test Result:	**PASS**

The test report merely corresponds to the test sample.
It is not permitted to copy extracts of these test result without the written permission of the test laboratory.

** Modifited History **

Revison	Description	Issued Data	Remark
Revsion 1.0	Initial Test Report Release	2016-12-26	Eric Wang

Contents

1. TEST STANDARDS 6

2. SUMMARY 7

2.1. General Remarks 7
2.2. Product Description 7
2.3. Summary SAR Results 8
2.4. Equipment under Test 8
2.5. EUT operation mode 8

3. TEST ENVIRONMENT 9

3.1. Address of the test laboratory 9
3.2. Test Facility 9
3.3. Environmental conditions 9
3.4. SAR Limits 9
3.5. Equipments Used during the Test 10

4. SAR MEASUREMENTS SYSTEM CONFIGURATION 11

4.1. SAR Measurement Set-up 11
4.2. DASY5 E-field Probe System 12
4.3. Phantoms Description 12
4.4. Device Holder 13
4.5. Scanning Procedure 14
4.6. Data Storage and Evaluation 15
4.7. SAR Measurement System 16
4.8. Dielectric Performance 17
4.9. System Check 17
4.10. Measurement Procedures 19
4.11. Operational Conditions during Test 23
4.12. Position of the wireless device in relation to the phantom 23
4.13. Test Configuration 24
4.14. Power Drift 27
4.15. Power Reduction 27

5. TEST CONDITIONS AND RESULTS 28

5.1. Conducted Power Results 28
5.2. Manufacturing tolerance 30
5.3. Transmit Antennas Position 31
5.4. Standalone SAR Test Exclusion Considerations 32
5.5. Standalone Estimated SAR 33
5.6. SAR Measurement Results 34
5.7. SAR Reporting Results 34
5.8. Simultaneous TX SAR Considerations 35
5.9. SAR Measurement Variability 37
5.10. Measurement Uncertainty (100-300MHz) 37
5.11. System Check Results 38
5.12. SAR Test Graph Results 44

6. CALIBRATION CERTIFICATE 50

6.1. Probe Calibration Ceriticate 50
6.2. D835V2 Dipole Calibration Certificate 61
6.3. D190V2 Dipole Calibration Certificate 69
6.4. D2450V2 Dipole Calibration Certificate 77
6.5. DAE4 Calibration Certificate 85

7. TEST SETUP PHOTOS 89

8. EXTERNAL PHOTOS OF THE EUT 94

1. TEST STANDARDS

The tests were performed according to following standards:

IEEE 1528-2013 (2014-06): Recommended Practice for Determining the Peak Spatial-Average Specific Absorption Rate (SAR) in the Human Head from Wireless Communications Devices: Measurement Techniques
IEEE Std. C95-3 (2002): IEEE Recommended Practice for the Measurement of Potentially Hazardous Electromagnetic Fields – RF and Microwave
IEEE Std. C95-1 (1992): IEEE Standard for Safety Levels with Respect to Human Exposure to Radio Frequency Electromagnetic Fields, 3 kHz to 300 GHz.
KDB 865664D01v01r04 (Augest 7, 2015): SAR Measurement Requirements for 100 MHz to 6 GHz
KDB 865664D02v01r02 (October 23, 2015): RF Exposure Compliance Reporting and Documentation Considerations
KDB 447498 D01 General RF Exposure Guidance v06 (October 23, 2015): Mobile and Portable Devices RF Exposure Procedures and Equipment Authorization Policies
KDB447498 D03 Supplement C Cross-Reference v01 (January 17, 2014): Mobile and Portable Device RF Exposure Procedures and Equipment Authorization Policies
KDB248227 D01 802.11 Wi-Fi SAR v02r02: SAR GUIDANCE FOR IEEE 802.11 (Wi-Fi) TRANSMITTERS
KDB 941225 D01 3G SAR Procedures v03r01: 3G SAR Measurement Procedures

2. SUMMARY

2.1. General Remarks

Date of receipt of test sample	:	December 15, 2016
Testing commenced on	:	December 18, 2016
Testing concluded on	:	December 20, 2016

2.2. Product Description

EUT Name	:	TABLET
Model Number	:	WG9750/8G-BT, TS9750/8G-BT
Trade Mark	:	WiiGO AAA/TOPSONIC
EUT function description	:	Please reference user manual of this device
Power supply	:	DC 3.7V by battery(3000mAh); Charging voltage: DC 5.0V, 2.0A
Operation frequency range	:	2412 MHz – 2462 MHz 2402 MHz – 2480 MHz 824.2 MHz – 848.8 MHz 1950.2 MHz – 1909.8 MHz
Hardware version	:	ET-86V2G-V2.0
Software version	:	astar_86v2g-eng 4.4.2 KVT49L 20160818
Antenna Type	:	PIFA antenna and 1.12dBi(max.) for GSM 850; 1.12dBi(max.) for PCS 1900; 3.0 dBi(max.) for WLAN/BT
Date of Receipt	:	2016/12/15
Device Type	:	Portable
Sample Type	:	Prototype Unit
Modulation Type	:	GMSK for GSM/GPRS, 8-PSK for EDGE (8-PSK only downlink)
WLAN	:	Supported IEEE 802.11b/IEEE 802.11g/IEEE 802.11n
WLAN FCC Operation Frequency	:	IEEE 802.11b:2412-2462MHz IEEE 802.11g:2412-2462MHz IEEE 802.11n HT20:2412-2462MHz IEEE 802.11n HT40:2422-2452MHz
WLAN Channel Number	:	11 Channels for WLAN 20MHz Bandwidth(IEEE 802.11b/g/n HT20) 7 Channels for WLAN 40MHz Bandwidth(IEEE 802.11n HT40)
WLAN Modulation Technology	:	IEEE 802.11b: DSSS(CCK,DQPSK,DBPSK) IEEE 802.11g: OFDM(64QAM, 16QAM, QPSK, BPSK) IEEE 802.11n: OFDM (64QAM, 16QAM,QPSK,BPSK)
Bluetooth	:	Supported BT 2.1+EDR
Bluetooth Operation frequency	:	2402MHz-2480MHz
Bluetooth Modulation Type	:	GFSK,π/4DQPSK, 8DPSK
Bluetooth Channel Number	:	79 Channels
GPS function	:	Supported and only RX
Extreme temp. Tolerance	:	-30°C to +50°C
Extreme vol. Limits	:	3.40VDC to 4.20VDC (nominal: 3.70VDC)
GSM/EDGE/GPRS Operation Frequency Band	:	GSM850/PCS1900/GPRS850/GPRS1900/EDGE850/EDGE1900
GSM/EDGE/GPRS	:	Supported GSM/GPRS/EDGE
GSM Release Version	:	R99
GSM/EDGE/GPRS Power Class	:	GSM850:Power Class 4/ PCS1900:Power Class 1
GPRS/EDGE Multislot Class	:	GPRS/EDGE: Multi-slot Class 12
GPRS operation mode	:	Class B
Exposure category:	:	General population / Uncontrolled environment

2.3. Summary SAR Results

The maximum of results of SAR found during testing for WG9750/8G-BT are follows:

<Highest Reported standalone SAR Summary>

Classment Class	Frequency Band	Head (Report SAR_{1-g} (W/Kg)	Body-worn (Report SAR_{1-g} (W/Kg)
PCE	GSM 850	0.197	0.735
	GSM1900	**0.478**	**0.918**
DTS	2.4GWLAN	**0.219**	**0.566**

This device is in compliance with Specific Absorption Rate (SAR) for general population/uncontrolled exposure limits (1.6 W/kg) specified in FCC 47 CFR part 2 (2.1093) and ANSI/IEEE C95.1-2005, and had been tested in accordance with the measurement methods and procedures specified in IEEE 1528-2013;

<Highest Reported simultaneous SAR Summary>

Exposure Position	Frequency Band	Reported SAR_{1-g} (W/kg)	Classment Class	Highest Reported Simultaneous Transmission SAR_{1-g} (W/kg)
Body-worn	GSM 1900	**0.918**	PCE	**1.484**
	2.4GWLAN	**0.566**	DTS	

2.4. Equipment under Test

Power supply system utilised

Power supply voltage	:	○	120V / 60 Hz	○	115V / 60Hz
		○	12 V DC	○	24 V DC
		●	Other (specified in blank below)		

DC 3.70 V

2.5. EUT operation mode

The spatial peak SAR values were assessed for Tablet.

3. TEST ENVIRONMENT

3.1. Address of the test laboratory

Shenzhen Yidajietong Test Technology Co., Ltd.

3/F., Building 12, Shangsha Innovation & Technology Park, Futian District, Shenzhen, Guangdong, China

3.2. Test Facility

The test facility is recognized, certified, or accredited by the following organizations:

CNAS-Lab Code: L7547

The Testing and Technology Center for SHENZHEN YIDA JIETONG INFORMATION TECHNOLOGY CO., LTD has been assessed and proved to be in compliance with CNAS-CL01 Accreditation Criteria for Testing and Calibration Laboratories (identical to ISO/IEC 17025: 2005 General Requirements) for the Competence of Testing and Calibration Laboratories, Date of Registration: March, 2015. Valid time is until March, 2018.

3.3. Environmental conditions

During the measurement the environmental conditions were within the listed ranges:

Temperature:	18-25 ° C
Humidity:	40-65 %
Atmospheric pressure:	950-1050mbar

3.4. SAR Limits

FCC Limit (1g Tissue)

Exposure Limits	**SAR (W/kg)**	
	(General Population / Uncontrolled Exposure Environment)	(Occupational / Controlled Exposure Environment)
Spatial Average (averaged over the whole body)	0.08	0.4
Spatial Peak (averaged over any 1 g of tissue)	1.60	8.0
Spatial Peak (hands/wrists/feet/ankles averaged over 10 g)	4.0	20.0

Population/Uncontrolled Environments are defined as locations where there is the exposure of individual who have no knowledge or control of their exposure.

Occupational/Controlled Environments are defined as locations where there is exposure that may be incurred by people who are aware of the potential for exposure (i.e. as a result of employment or occupation).

3.5. Equipments Used during the Test

Test Equipment	Manufacturer	Type/Model	Serial Number	Calibration	
				Last Calibration	Calibration Interval
Data Acquisition Electronics DAEx	SPEAG	DAE4	1315	2016/07/26	1
E-field Probe	SPEAG	EX3DV4	3836	2016/07/07	1
System Validation Dipole D835V2	SPEAG	D835V2	4d141	2015/09/24	3
System Validation Dipole 1900V2	SPEAG	D1900V2	5d162	2015/09/16	3
System Validation Dipole D2450V2	SPEAG	D2450V2	818	2015/09/14	3
Network analyzer	Agilent	8753E	US37390562	2016/03/05	1
Dielectric Probe Kit	Agilent	85070E	US44020288	/	/
Power meter	Agilent	E4417A	GB41292254	2016/12/15	1
Power sensor	Agilent	8481H	MY41095360	2016/12/15	1
Power sensor	Agilent	8481H	MY41095361	2016/12/15	1
Signal generator	IFR	2032	203002/100	2016/10/12	1
Amplifier	AR	75A250	302205	2016/10/12	1

Note:

1) Per KDB865664D01 requirements for dipole calibration, the test laboratory has adopted three year extended calibration interval. Each measured dipole is expected to evalute with following criteria at least on annual interval.
   a) There is no physical damage on the dipole;
   b) System check with specific dipole is within 10% of calibrated values;
   c) The most recent return-loss results,measued at least annually,deviates by no more than 20% from the previous measurement;
   d) The most recent measurement of the real or imaginary parts of the impedance, measured at least annually is within 50 Ω from the provious measurement.
2) Network analyzer probe calibration against air, distilled water and a shorting block performed before measuring liquid parameters.

4. SAR Measurements System configuration

4.1. SAR Measurement Set-up

The DASY5 system for performing compliance tests consists of the following items:

A standard high precision 6-axis robot (Stäubli RX family) with controller and software. An arm extension for accommodating the data acquisition electronics (DAE).

A dosimetric probe, i.e. an isotropic E-field probe optimized and calibrated for usage in tissue simulating liquid. The probe is equipped with an optical surface detector system.

A data acquisition electronic (DAE) which performs the signal amplification, signal multiplexing, AD-conversion, offset measurements, mechanical surface detection, collision detection, etc. The unit is battery powered with standard or rechargeable batteries. The signal is optically transmitted to the EOC.

A unit to operate the optical surface detector which is connected to the EOC.

The Electro-Optical Coupler (EOC) performs the conversion from the optical into a digital electric signal of the DAE. The EOC is connected to the DASY5 measurement server.

The DASY5 measurement server, which performs all real-time data evaluation for field measurements and surface detection, controls robot movements and handles safety operation. A computer operating Windows 2003.

DASY5 software and SEMCAD data evaluation software.

Remote control with teach panel and additional circuitry for robot safety such as warning lamps, etc.

The generic twin phantom enabling the testing of left-hand and right-hand usage.

The device holder for handheld Mobile Phones.

Tissue simulating liquid mixed according to the given recipes.

System validation dipoles allowing to validate the proper functioning of the system.

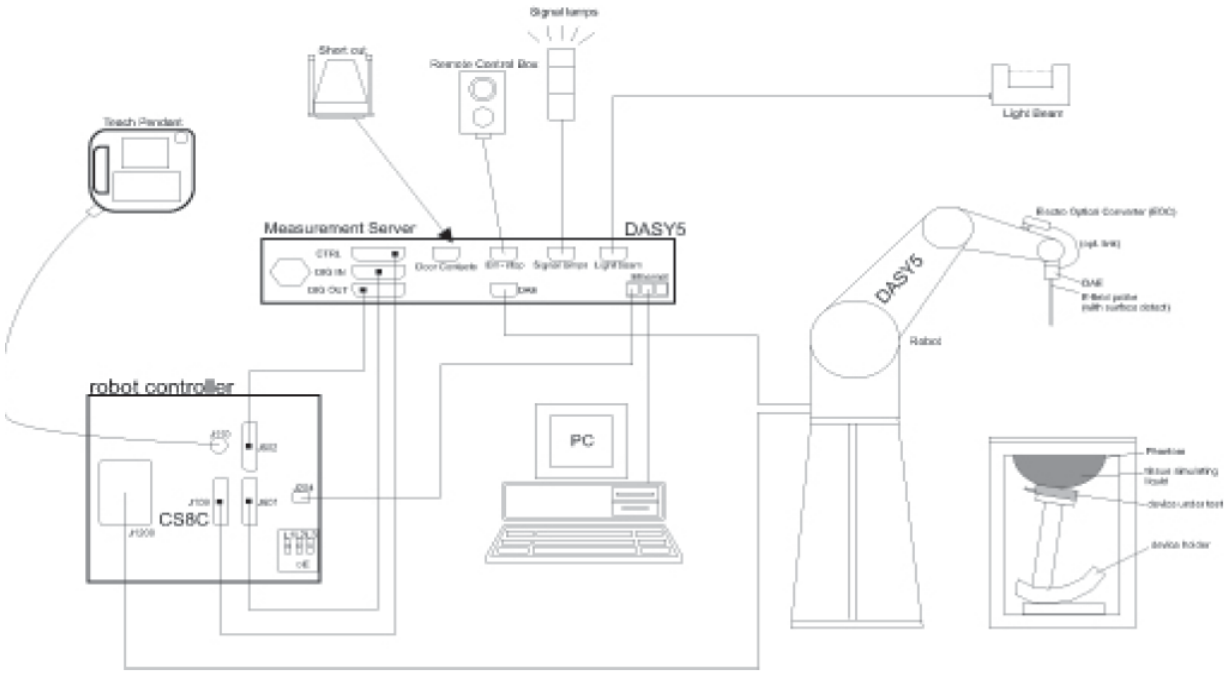

4.2. DASY5 E-field Probe System

The SAR measurements were conducted with the dosimetric probe EX3DV4 (manufactured by SPEAG), designed in the classical triangular configuration and optimized for dosimetric evaluation.

Probe Specification

Construction	Symmetrical design with triangular core Interleaved sensors Built-in shielding against static charges PEEK enclosure material (resistant to organic solvents, e.g., DGBE)
Calibration	ISO/IEC 17025 calibration service available.
Frequency	10 MHz to 4 GHz; Linearity: ± 0.2 dB (30 MHz to 4 GHz)
Directivity	± 0.2 dB in HSL (rotation around probe axis) ± 0.3 dB in tissue material (rotation normal to probe axis)
Dynamic Range	5 µW/g to > 100 mW/g; Linearity: ± 0.2 dB
Dimensions	Overall length: 337 mm (Tip: 20 mm) Tip diameter: 3.9 mm (Body: 12 mm) Distance from probe tip to dipole centers: 2.0 mm
Application	General dosimetry up to 4 GHz Dosimetry in strong gradient fields Compliance tests of Mobile Phones
Compatibility	DASY3, DASY4, DASY52 SAR and higher, EASY4/MRI

Isotropic E-Field Probe

The isotropic E-Field probe has been fully calibrated and assessed for isotropicity, and boundary effect within a controlled environment. Depending on the frequency for which the probe is calibrated the method utilized for calibration will change.

The E-Field probe utilizes a triangular sensor arrangement as detailed in the diagram below:

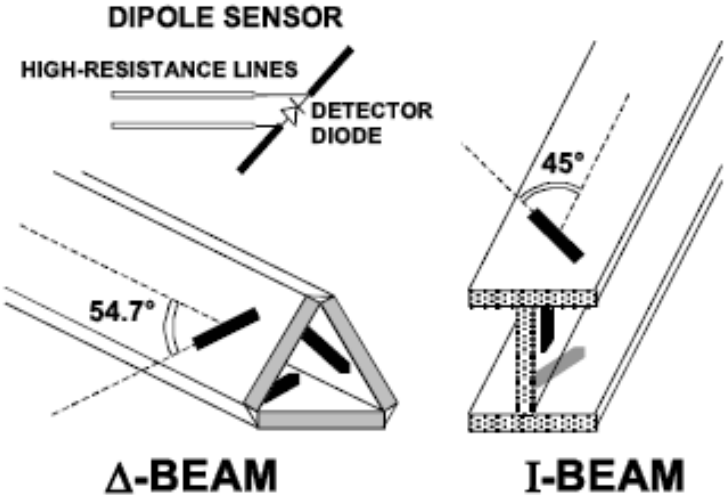

4.3. Phantoms Description

SAM Twin Phantom
The phantom used for all tests i.e. for both system checks and device testing, was the twin-headed "SAM Phantom", manufactured by SPEAG. The SAM twin phantom is a fiberglass shell phantom with 2mm shell thickness (except the ear region, where shell thickness increases to 6mm).
System checking was performed using the flat section, whilst Head SAR tests used the left and right head profile sections. Body SAR testing also used the flat section between the head profiles.

Shell Thickness	2mm +/- 0.2 mm; The ear region: 6mm	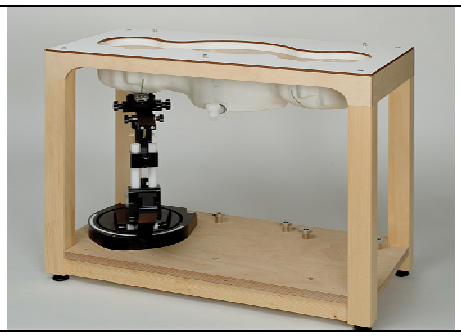
Filling Volume	Approximately 25 liters	
Dimensions	Major axis:600mm; Minor axis:400mm;	
Measurement Areas	Left hand Right hand Flat phantom	
The bottom plate contains three pairs of bolts for locking the device holder. The device holder positions are adjusted to the standard measurement positions in the three sections. A white cover is provided to cover the phantom during off-periods to prevent water evaporation and changes in the liquid parameters. Free space scans of devices on top of this phantom cover are possible. Three reference marks are provided on the phantom counter. These reference marks are used to teach the absolute phantom position relative to the robot.		

The following figure shows the definition of reference point:

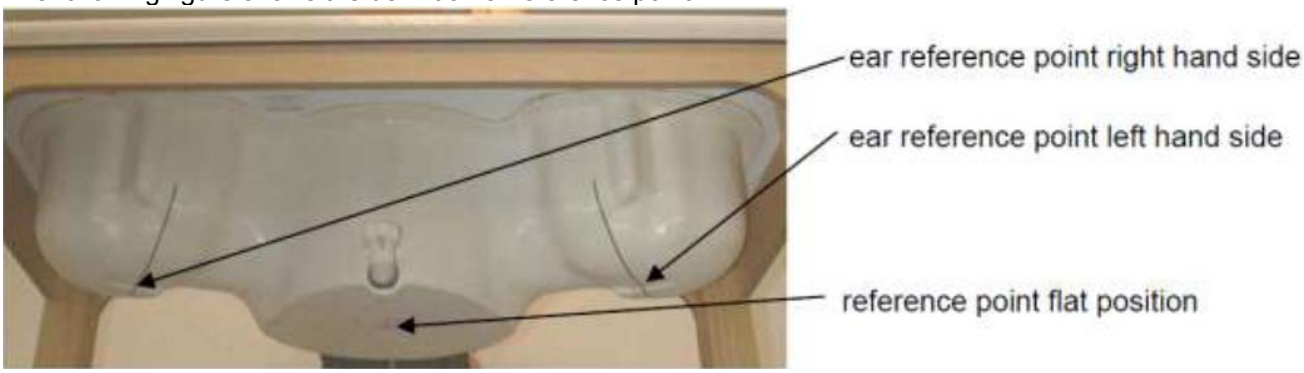

ELI4 Phantom
Phantom for compliance testing of handheld and body-mounted wireless devices in the frequency range of 30 MHz to 6 GHz. ELI is fully compatible with the IEC 62209-2 standard and all known tissue simulating liquids. ELI has been optimized regarding its performance and can be integrated into our standard phantom tables. A cover prevents evaporation of the liquid. Reference markings on the phantom allow installation of the complete setup, including all predefined phantom positions and measurement grids, by teaching three points. The phantom is compatible with all SPEAG dosimetric probes and dipoles.

Shell Thickness	2mm +/- 0.2 mm	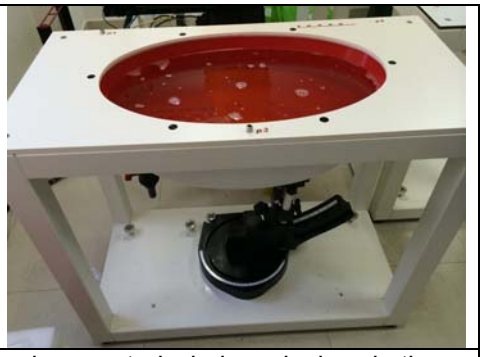
Filling Volume	Approximately 30 liters	
Dimensions	Major axis:600mm; Minor axis:400mm;	
Measurement Areas	Flat phantom	
The ELI4 phantom is intended for compliance testing of handheld and body-mounted wireless devices in the frequency range of 30MHz to 6GHz. ELI4 is fully compatible with the latest draft of the standard IEC 62209-2 and all known tissue simulating liquids.		

The phantom shell material is resistant to all ingredients used in the tissue-equivalent liquid recipes. The shell of the phantom including ear spacers is constructed from low permittivity and low loss material, with a relative permittivity ≤5 and a loss tangent ≤0.05.

4.4. Device Holder

The device was placed in the device holder (illustrated below) that is supplied by SPEAG as an integral part of the DASY system.
The DASY device holder is designed to cope with the different positions given in the standard. It has two scales for device rotation (with respect to the body axis) and device inclination (with respect to the line

between the ear reference points). The rotation centers for both scales is the ear reference point (ERP). Thus the device needs no repositioning when changing the angles.

Device holder supplied by SPEAG

4.5. Scanning Procedure

The DASY5 installation includes predefined files with recommended procedures for measurements and validation. They are read-only document files and destined as fully defined but unmeasured masks. All test positions (head or body-worn) are tested with the same configuration of test steps differing only in the grid definition for the different test positions.

The “reference” and “drift” measurements are located at the beginning and end of the batch process. They measure the field drift at one single point in the liquid over the complete procedure. The indicated drift is mainly the variation of the DUT’s output power and should vary max. ± 5 %.
The “surface check” measurement tests the optical surface detection system of the DASY5 system by repeatedly detecting the surface with the optical and mechanical surface detector and comparing the results. The output gives the detecting heights of both systems, the difference between the two systems and the standard deviation of the detection repeatability. Air bubbles or refraction in the liquid due to separation of the sugar-water mixture gives poor repeatability (above ± 0.1mm). To prevent wrong results tests are only executed when the liquid is free of air bubbles. The difference between the optical surface detection and the actual surface depends on the probe and is specified with each probe (It does not depend on the surface reflectivity or the probe angle to the surface within ± 30°.)

Area Scan
The Area Scan is used as a fast scan in two dimensions to find the area of high field values before running a detailed measurement around the hot spot.Before starting the area scan a grid spacing of 15 mm x 15 mm is set. During the scan the distance of the probe to the phantom remains unchanged. After finishing area scan, the field maxima within a range of 2 dB will be ascertained.

Zoom Scan
Zoom Scans are used to estimate the peak spatial SAR values within a cubic averaging volume containing 1 g and 10 g of simulated tissue. The default Zoom Scan is done by 7x7x7 points within a cube whose base is centered around the maxima found in the preceding area scan.

Spatial Peak Detection
The procedure for spatial peak SAR evaluation has been implemented and can determine values of massesof 1g and 10g, as well as for user-specific masses.The DASY5 system allows evaluations that combine measured data and robot positions, such as: • maximum search • extrapolation • boundary correction • peak search for averaged SAR During a maximum search, global and local maxima searches are automatically performed in 2-D after each Area Scan measurement with at least 6 measurement points. It is based on the evaluation of the local SAR gradient calculated by the Quadratic Shepard’s method. The algorithm will find the global maximum and all local maxima within -2 dB of the global maxima for all SAR distributions.

Extrapolation routines are used to obtain SAR values between the lowest measurement points and the inner

phantom surface. The extrapolation distance is determined by the surface detection distance and the probe sensor offset. Several measurements at different distances are necessary for the extrapolation. Extrapolation routines require at least 10 measurement points in 3-D space. They are used in the Zoom Scan to obtain SAR values between the lowest measurement points and the inner phantom surface. The routine uses the modified Quadratic Shepard's method for extrapolation. For a grid using 7x7x7 measurement points with 5mm resolution amounting to 343 measurement points, the uncertainty of the extrapolation routines is less than 1% for 1g and 10g cubes.

A Z-axis scan measures the total SAR value at the x-and y-position of the maximum SAR value found during the cube 7x7x7 scan. The probe is moved away in z-direction from the bottom of the SAM phantom in 5mm steps.

The following table summarizes the area scan and zoom scan resolutions:

			≤ 3 GHz	> 3 GHz
Maximum distance from closest measurement point (geometric center of probe sensors) to phantom surface			5 mm ±1 mm	½· δ ·ln(2) mm ± 0.5 mm
Maximum probe angle from probe axis to phantom surface normal at the measurement location			30° ± 1°	20° ± 1°
Maximum area scan spatial resolution: Δx_{Area}, Δy_{Area}			≤ 2 GHz: ≤15 mm 2 – 3 GHz: ≤ 12 mm	3 – 4 GHz: ≤ 12 mm 4 – 6 GHz: ≤ 10 mm
			When the x or y dimension of the test device, in the measurement plane orientation, is smaller than the above, the measurement resolution must be ≤ the corresponding x or y dimension of the test device with at least one measurement point on the test device.	
Maximum zoom scan spatial resolution: Δx_{Zoom}, Δy_{Zoom}			≤ 2 GHz: ≤ 8 mm 2 – 3 GHz: ≤ 5 mm*	3 – 4 GHz: ≤ 5 mm* 4 – 6 GHz: ≤ 4 mm*
Maximum zoom scan spatial resolution, normal to phantom surface	uniform grid: $\Delta z_{Zoom}(n)$		≤ 5 mm	3 – 4 GHz: ≤ 4 mm 4 – 5 GHz: ≤ 3 mm 5 – 6 GHz: ≤ 2 mm
	graded grid	$\Delta z_{Zoom}(1)$: between 1st two points closest to phantom surface	≤ 4 mm	3 – 4 GHz: ≤ 3 mm 4 – 5 GHz: ≤ 2.5 mm 5 – 6 GHz: ≤ 2 mm
		$\Delta z_{Zoom}(n>1)$: between subsequent points	≤ 1.5· $\Delta z_{Zoom}(n-1)$ mm	
Minimum zoom scan volume	x, y, z		≥ 30 mm	3 – 4 GHz: ≥ 28 mm 4 – 5 GHz: ≥ 25 mm 5 – 6 GHz: ≥ 22 mm
Note: δ is the penetration depth of a plane-wave at normal incidence to the tissue medium; see IEEE Std 1528-2013 for details. * When zoom scan is required and the reported SAR from the area scan based 1-g SAR estimation procedures of KDB Publication 447498 is ≤ 1.4 W/kg, ≤ 8 mm, ≤ 7 mm and ≤ 5 mm zoom scan resolution may be applied, respectively, for 2 GHz to 3 GHz, 3 GHz to 4 GHz and 4 GHz to 6 GHz.				

4.6. Data Storage and Evaluation

Data Storage

The DASY5 software stores the acquired data from the data acquisition electronics as raw data (in microvolt readings from the probe sensors), together with all necessary software parameters for the data evaluation (probe calibration data, liquid parameters and device frequency and modulation data) in measurement files with the extension ".DA4". The software evaluates the desired unit and format for output each time the data is visualized or exported. This allows verification of the complete software setup even after the measurement and allows correction of incorrect parameter settings. For example, if a measurement has been performed with a wrong crest factor parameter in the device setup, the parameter can be corrected afterwards and the data can be re-evaluated.

The measured data can be visualized or exported in different units or formats, depending on the selected probe type ([V/m], [A/m], [°C], [mW/g], [mW/cm²], [dBrel], etc.). Some of these units are not available in certain situations or show meaningless results, e.g., a SAR output in a lossless media will always be zero. Raw data can also be exported to perform the evaluation with other software packages.

Data Evaluation

The SEMCAD software automatically executes the following procedures to calculate the field units from the microvolt readings at the probe connector. The parameters used in the evaluation are stored in the configuration modules of the software:

Probe parameters:	- Sensitivity	Normi, ai0, ai1, ai2
	- Conversion factor	ConvFi
	- Diode compression point	Dcpi
Device parameters:	- Frequency	f
	- Crest factor	cf
Media parameters:	- Conductivity	σ
	- Density	ρ

These parameters must be set correctly in the software. They can be found in the component documents or they can be imported into the software from the configuration files issued for the DASY5 components. In the direct measuring mode of the multimeter option, the parameters of the actual system setup are used. In the scan visualization and export modes, the parameters stored in the corresponding document files are used.

The first step of the evaluation is a linearization of the filtered input signal to account for the compression characteristics of the detector diode. The compensation depends on the input signal, the diode type and the DC-transmission factor from the diode to the evaluation electronics. If the exciting field is pulsed, the crest factor of the signal must be known to correctly compensate for peak power. The formula for each channel can be given as:

$$V_i = U_i + U_i^2 \cdot \frac{cf}{dcp_i}$$

With Vi = compensated signal of channel i (i = x, y, z)
Ui = input signal of channel i (i = x, y, z)
cf = crest factor of exciting field (DASY parameter)
dcpi = diode compression point (DASY parameter)

From the compensated input signals the primary field data for each channel can be evaluated:

$$\text{E} - \text{fieldprobes}: \qquad E_i = \sqrt{\frac{V_i}{Norm_i \cdot ConvF}}$$

$$\text{H} - \text{fieldprobes}: \qquad H_i = \sqrt{V_i} \cdot \frac{a_{i0} + a_{i1}f + a_{i2}f^2}{f}$$

With Vi = compensated signal of channel i (i = x, y, z)
Normi = sensor sensitivity of channel i (i = x, y, z)
[mV/(V/m)2] for E-field Probes
ConvF = sensitivity enhancement in solution
aij = sensor sensitivity factors for H-field probes
f = carrier frequency [GHz]
Ei = electric field strength of channel i in V/m
Hi = magnetic field strength of channel i in A/m

The RSS value of the field components gives the total field strength (Hermitian magnitude):

$$E_{tot} = \sqrt{E_x^2 + E_y^2 + E_z^2}$$

The primary field data are used to calculate the derived field units.

$$SAR = E_{tot}^2 \cdot \frac{\sigma}{\rho \cdot 1'000}$$

with SAR = local specific absorption rate in mW/g
Etot = total field strength in V/m
σ = conductivity in [mho/m] or [Siemens/m]
ρ = equivalent tissue density in g/cm3

Note that the density is normally set to 1 (or 1.06), to account for actual brain density rather than the density of the simulation liquid.

4.7. SAR Measurement System

The SAR measurement system being used is the DASY5 system, the system is controlled remotely from a PC, which contains the software to control the robot and data acquisition equipment. The software also displays the data obtained from test scans.

In operation, the system first does an area (2D) scan at a fixed depth within the liquid from the inside wall of the phantom. When the maximum SAR point has been found, the system will then carry out a 3D scan centred at that point to determine volume averaged SAR level.

4.7.1 Tissue Dielectric Parameters for Head and Body Phantoms

The liquid is consisted of water,salt,Glycol,Sugar,Preventol and Cellulose and DGBE.The liquid has previously been proven to be suited for worst-case. It's satisfying the latest tissue dielectric parameters requirements proposed by the KDB865664.

Target Frequency	Head		Body	
(MHz)	ε_r	σ(S/m)	ε_r	σ(S/m)
150	52.3	0.76	61.9	0.80
300	45.3	0.87	58.2	0.92
450	43.5	0.87	56.7	0.94
835	41.5	0.90	55.2	0.97
900	41.5	0.97	55.0	1.05
915	41.5	0.98	55.0	1.06
1450	40.5	1.20	54.0	1.30
1610	40.3	1.29	53.8	1.40
1800-2000	40.0	1.40	53.3	1.52
2450	39.2	1.80	52.7	1.95
3000	38.5	2.40	52.0	2.73
5800	35.3	5.27	48.2	6.00

(ε_r = relative permittivity, σ = conductivity and ρ = 1000 kg/m^3)

4.8. Dielectric Performance

Dielectric performance of Head and Body tissue simulating liquid.

Ingredient	835MHz		1900MHz		1750 MHz		2450MHz		2600MHz	
(% Weight)	Head	Body	Head	Body	Head	Body	Head	Body	Head	Body
Water	41.45	52.5	55.242	69.91	55.782	69.82	62.7	73.2	62.3	72.6
Salt	1.45	1.40	0.306	0.13	0.401	0.12	0.50	0.10	0.20	0.10
Sugar	56	45.0	0.00	0.00	0.00	0.00	0.00	0.00	0.00	0.00
Preventol	0.10	0.10	0.00	0.00	0.00	0.00	0.00	0.00	0.00	0.00
HEC	1.00	1.00	0.00	0.00	0.00	0.00	0.00	0.00	0.00	0.00
DGBE	0.00	0.00	44.452	29.96	43.817	30.06	36.8	26.7	37.5	27.3

Tissue Type	Measured Frequency (MHz)	Target Tissue		Measured Tissue				Liquid Temp. (degree)	Test Data
		ε_r	σ	ε_r	Dev. %	σ	Dev. %		
835H	835	41.5	0.90	42.10	1.45	0.91	1.11	22.2	2016-12-20
835B	835	55.2	0.97	56.80	2.90	0.95	-2.06	22.2	2016-12-19
1900H	1900	40.0	1.40	41.20	3.00	1.38	-1.43	22.2	2016-12-20
1900B	1900	53.3	1.52	54.50	2.25	1.55	1.97	22.2	2016-12-19
2450H	2450	39.2	1.80	39.70	1.28	1.84	2.22	22.2	2016-12-20
2450B	2450	52.7	1.95	53.90	2.28	1.97	1.03	22.2	2016-12-18

4.9. System Check

The purpose of the system check is to verify that the system operates within its specifications at the decice test frequency.The system check is simple check of repeatability to make sure that the system works correctly at the time of the compliance test;

System check results have to be equal or near the values determined during dipole calibration with the relevant liquids and test system (±10 %).
System check is performed regularly on all frequency bands where tests are performed with the DASY5 system.

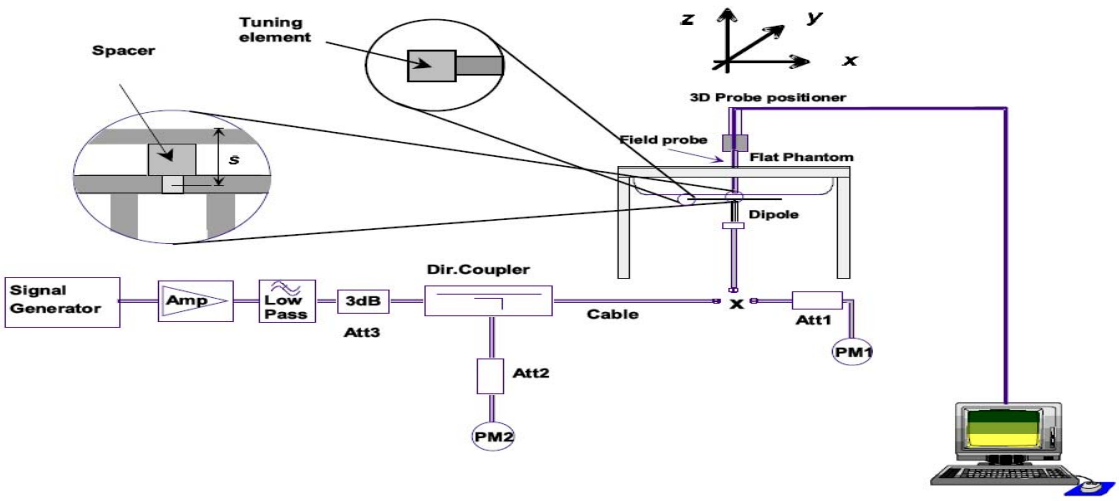

The output power on dipole port must be calibrated to 20 dBm (100mW) before dipole is connected.

Justification for Extended SAR Dipole Calibrations
Referring to KDB 865664D01V01r04, if dipoles are verified in return loss (<-20dB, within 20% of prior calibration), and in impedance (within 5 ohm of prior calibration), the annual calibration is not necessary and the calibration interval can be extended. While calibration intervals not exceed 3 years.

D835V2, Serial No.: 4d141 Extend Dipole Calibrations

835MHz Head						
Date of Measurement	Return-Loss (dB)	Delta (%)	Real Impedance (ohm)	Delta (ohm)	Imaginary Impedance (ohm)	Delta (ohm)
2015-09-24	-25.90		48.2		-4.66	
2016-08-22	-27.20	-5.019	49.177	0.977	-4.944	-0.284
835MHz Body						
Date of Measurement	Return-Loss (dB)	Delta (%)	Real Impedance (ohm)	Delta (ohm)	Imaginary Impedance (ohm)	Delta (ohm)
2015-09-24	-22.30		45.70		-5.94	
2016-08-22	-23.50	-5.381	47.836	2.136	-6.447	-0.507

D1900V2, Serial No.: 5d162 Extend Dipole Calibrations

1900MHz Head						
Date of Measurement	Return-Loss (dB)	Delta (%)	Real Impedance (ohm)	Delta (ohm)	Imaginary Impedance (ohm)	Delta (ohm)
2015-09-16	-30.90		51.0		2.72	
2016-08-22	-33.20	-7.443	52.629	1.629	3.422	0.702
1900MHz Body						
Date of Measurement	Return-Loss (dB)	Delta (%)	Real Impedance (ohm)	Delta (ohm)	Imaginary Impedance (ohm)	Delta (ohm)
2015-09-16	-27.30		48.4		3.95	
2016-08-22	-29.70	-8.791	49.915	1.515	4.442	0.492

D2450V2, Serial No.: 818 Extend Dipole Calibrations

2.45GHz Head						
Date of Measurement	Return-Loss (dB)	Delta (%)	Real Impedance (ohm)	Delta (ohm)	Imaginary Impedance (ohm)	Delta (ohm)
2015-09-14	-26.40		52.00		4.41	
2016-08-22	-26.80	-1.515	52.564	0.564	4.678	0.268
2.45GHz Body						
Date of Measurement	Return-Loss (dB)	Delta (%)	Real Impedance (ohm)	Delta (ohm)	Imaginary Impedance (ohm)	Delta (ohm)
2015-09-14	-26.40		49.40		4.75	
2016-08-22	-27.10	-2.652	50.316	0.916	4.866	0.116

System Check in Head Tissue Simulating Liquid

Freq	Test Date	Dielectric Parameters		Temp	100mW Measured	1W Normalized	1W Target	Limit (±10% Deviation)
		ε_r	σ(s/m)		SAR_{1g}	SAR_{1g}	SAR_{1g}	SAR_{1g}
835 MHz	2016-12-20	42.10	0.91	22.2	0.972	9.72	9.45	2.86%
1900 MHz	2016-12-20	41.20	1.38	22.2	4.16	41.60	40.4	0.75%
2450 MHz	2016-12-20	39.70	1.84	22.2	5.44	54.40	52.7	3.23%

System Check in Body Tissue Simulating Liquid

Freq	Test Date	Dielectric Parameters		Temp	100mW Measured	1W Normalized	1W Target	Limit (±10% Deviation)
		ε_r	σ(s/m)		SAR_{1g}	SAR_{1g}	SAR_{1g}	SAR_{1g}
835 MHz	2016-12-19	56.80	0.95	22.2	0.966	9.66	9.51	1.58%
1900 MHz	2016-12-19	54.50	1.55	22.2	3.99	39.90	41.2	-3.12%
2450 MHz	2016-12-18	53.90	1.97	22.2	5.08	50.80	51.1	-0.59%

4.10. Measurement Procedures

Tests to be performed

In order to determine the highest value of the peak spatial-average SAR of a handset, all device positions, configurations and operational modes shall be tested for each frequency band according to steps 1 to 3 below. A flowchart of the test process is shown in Picture 11

Step 1: The tests described in 11.2 shall be performed at the channel that is closest to the centre of the transmit frequency band (f_c) for:

a) all device positions (cheek and tilt, for both left and right sides of the SAM phantom, as described in Chapter 8),
b) all configurations for each device position in a), e.g., antenna extended and retracted, and
c) all operational modes, e.g., analogue and digital, for each device position in a) and configuration in b) in each frequency band.
d) If more than three frequencies need to be tested according to 11.1 (i.e., $N_c > 3$), then all frequencies, configurations and modes shall be tested for all of the above test conditions.

Step 2: For the condition providing highest peak spatial-average SAR determined in Step 1, perform all tests described in 11.2 at all other test frequencies, i.e., lowest and highest frequencies. In addition, for all other conditions (device position, configuration and operational mode) where the peak spatial-average SAR value determined in Step 1 is within 3 dB of the applicable SAR limit, it is recommended that all other test frequencies shall be tested as well.

Step 3: Examine all data to determine the highest value of the peak spatial-average SAR found in Steps 1 to 2.

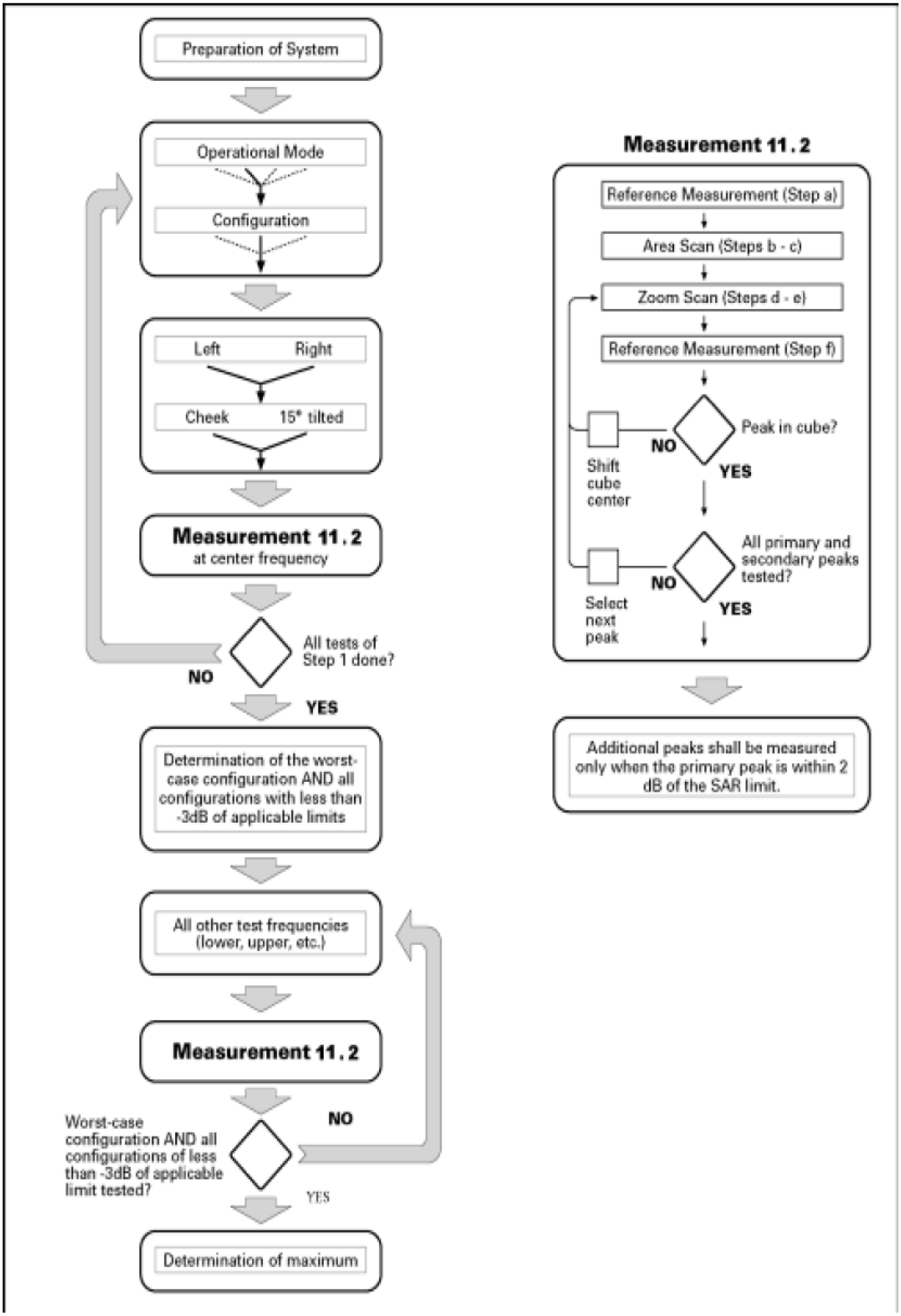

Picture 11 Block diagram of the tests to be performed

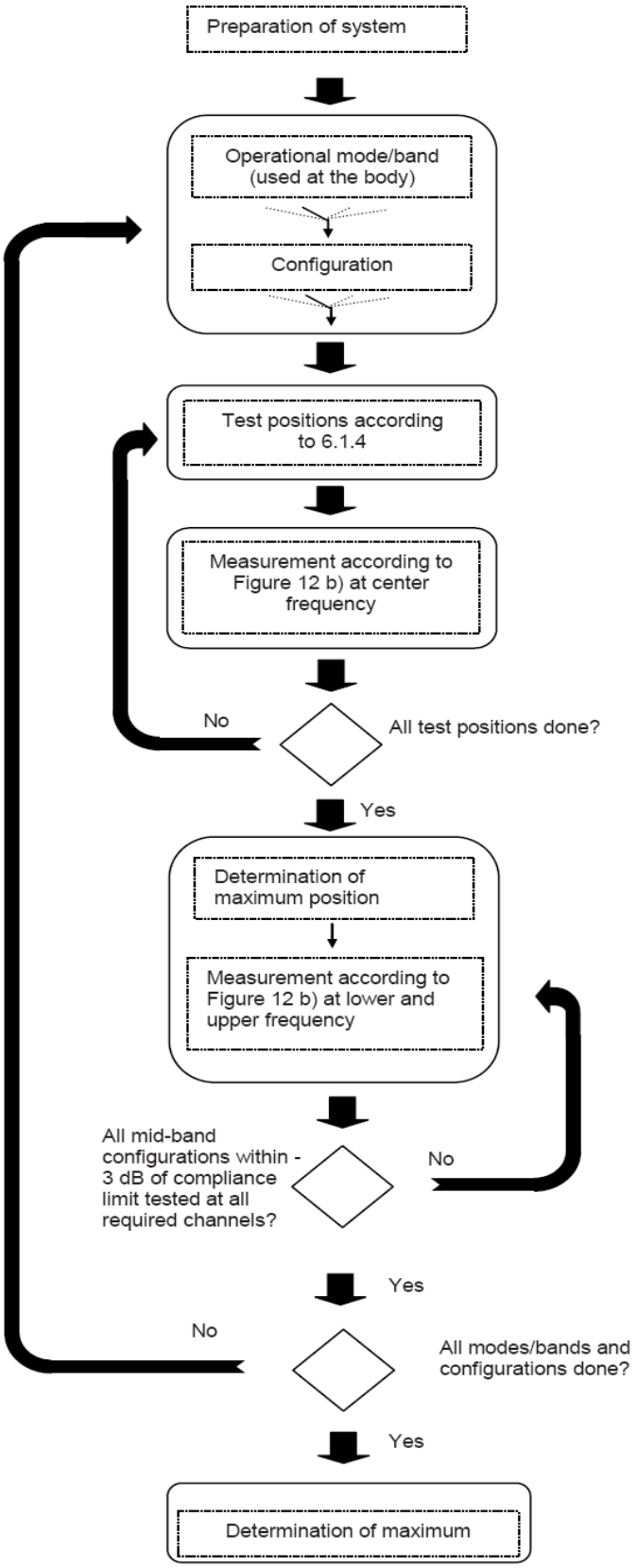

Figure 12a – Tests to be performed

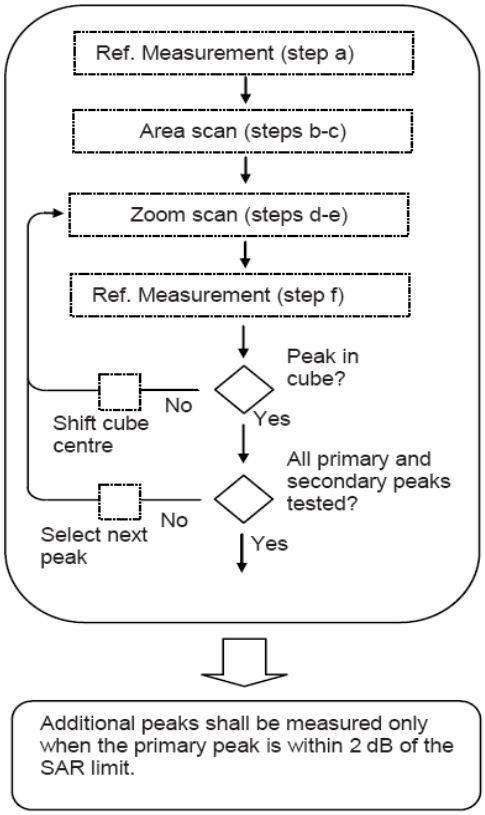

Figure 12b – General procedure

Picture 12 Block diagram of the tests to be performed

Measurement procedure

The following procedure shall be performed for each of the test conditions (see Picture 11) described in 11.1:

a) Measure the local SAR at a test point within 8 mm or less in the normal direction from the inner surface of the phantom.

b) Measure the two-dimensional SAR distribution within the phantom (area scan procedure). The boundary of the measurement area shall not be closer than 20 mm from the phantom side walls. The distance between the measurement points should enable the detection of the location of local maximum with an

accuracy of better than half the linear dimension of the tissue cube after interpolation. A maximum grip spacing of 20 mm for frequencies below 3 GHz and (60/f [GHz]) mm for frequencies of 3GHz and greater is recommended. The maximum distance between the geometrical centre of the probe detectors and the inner surface of the phantom shall be 5 mm for frequencies below 3 GHz andδln(2)/2 mm for frequencies of 3 GHz and greater, whereδis the plane wave skin depth and ln(x) is the natural logarithm. The maximum variation of the sensor-phantom surface shall be ±1 mm for frequencies below 3 GHz and ±0.5 mm for frequencies of 3 GHz and greater. At all measurement points the angle of the probe with respect to the line normal to the surface should be less than 5°. If this cannot be achieved for a measurement distance to the phantom inner surface shorter than the probe diameter, additional measurement distance to the phantom inner surface shorter than the probe diameter, additional

c) From the scanned SAR distribution, identify the position of the maximum SAR value, in addition identify the positions of any local maxima with SAR values within 2 dB of the maximum value that are not within the zoom-scan volume; additional peaks shall be measured only when the primary peak is within 2 dB of the SAR limit. This is consistent with the 2 dB threshold already stated;
d) Measure the three-dimensional SAR distribution at the local maxima locations identified in step
e) The horizontal grid step shall be (24 / f[GHz]) mm or less but not more than 8 mm. The minimum zoom size of 30 mm by 30 mm and 30 mm for frequencies below 3 GHz. For higher frequencies, the minimum zoom size of 22 mm by 22 mm and 22 mm. The grip step in the vertical direction shall be (8-f[GHz]) mm or less but not more than 5 mm, if uniform spacing is used. If variable spacing is used in the vertical direction, the maximum spacing between the two closest measured points to the phantom shell shall be (12 / f[GHz]) mm or less but not more than 4 mm, and the spacing between father points shall increase by an incremental factor not exceeding 1.5. When variable spacing is used, extrapolation routines shall be tested with the same spacing as used in measurements. The maximum distance between the geometrical centre of the probe detectors and the inner surface of the phantom shall be 5 mm for frequencies below 3 GHz and δln(2)/2 mm for frequencies of 3 GHz and greater, where δis the plane wave skin depth and ln(x) is the natural logarithm. Separate grids shall be centered on each of the local SAR maxima found in step c). Uncertainties due to field distortion between the media boundary and the dielectric enclosure of the probe should also be minimized, which is achieved is the distance between the phantom surface and physical tip of the probe is larger than probe tip diameter. Other methods may utilize correction procedures for these boundary effects that enable high precision measurements closer than half the probe diameter. For all measurement points, the angle of the probe with respect to the flat phantom surface shall be less than 5. If this cannot be achieved an additional uncertainty evaluation is needed.
f) Use post processing(e.g. interpolation and extrapolation) procedures to determine the local SAR values at the spatial resolution needed for mass averaging.

Measurement procedure

The following procedure shall be performed for each of the test conditions (see Picture 11) described in 11.1:

g) Measure the local SAR at a test point within 8 mm or less in the normal direction from the inner surface of the phantom.
h) Measure the two-dimensional SAR distribution within the phantom (area scan procedure). The boundary of the measurement area shall not be closer than 20 mm from the phantom side walls. The distance between the measurement points should enable the detection of the location of local maximum with an accuracy of better than half the linear dimension of the tissue cube after interpolation. A maximum grip spacing of 20 mm for frequencies below 3 GHz and (60/f [GHz]) mm for frequencies of 3GHz and greater is recommended. The maximum distance between the geometrical centre of the probe detectors and the inner surface of the phantom shall be 5 mm for frequencies below 3 GHz andδln(2)/2 mm for frequencies of 3 GHz and greater, whereδis the plane wave skin depth and ln(x) is the natural logarithm. The maximum variation of the sensor-phantom surface shall be ±1 mm for frequencies below 3 GHz and ±0.5 mm for frequencies of 3 GHz and greater. At all measurement points the angle of the probe with respect to the line normal to the surface should be less than 5°. If this cannot be achieved for a measurement distance to the phantom inner surface shorter than the probe diameter, additional measurement distance to the phantom inner surface shorter than the probe diameter, additional
i) From the scanned SAR distribution, identify the position of the maximum SAR value, in addition identify the positions of any local maxima with SAR values within 2 dB of the maximum value that are not within the zoom-scan volume; additional peaks shall be measured only when the primary peak is within 2 dB of the SAR limit. This is consistent with the 2 dB threshold already stated;
j) Measure the three-dimensional SAR distribution at the local maxima locations identified in step
k) The horizontal grid step shall be (24 / f[GHz]) mm or less but not more than 8 mm. The minimum zoom size of 30 mm by 30 mm and 30 mm for frequencies below 3 GHz. For higher frequencies, the minimum zoom size of 22 mm by 22 mm and 22 mm. The grip step in the vertical direction shall be (8-f[GHz]) mm or less but not more than 5 mm, if uniform spacing is used. If variable spacing is used in the vertical direction, the maximum spacing between the two closest measured points to the phantom shell shall be (12 / f[GHz]) mm or less but not more than 4 mm, and the spacing between father points shall increase by an incremental factor not exceeding 1.5. When variable spacing is used, extrapolation routines shall be tested with the same spacing as used in measurements. The maximum distance between the geometrical

centre of the probe detectors and the inner surface of the phantom shall be 5 mm for frequencies below 3 GHz and δln(2)/2 mm for frequencies of 3 GHz and greater, where δis the plane wave skin depth and ln(x) is the natural logarithm. Separate grids shall be centered on each of the local SAR maxima found in step c). Uncertainties due to field distortion between the media boundary and the dielectric enclosure of the probe should also be minimized, which is achieved is the distance between the phantom surface and physical tip of the probe is larger than probe tip diameter. Other methods may utilize correction procedures for these boundary effects that enable high precision measurements closer than half the probe diameter. For all measurement points, the angle of the probe with respect to the flat phantom surface shall be less than 5. If this cannot be achieved an additional uncertainty evaluation is needed.

l) Use post processing(e.g. interpolation and extrapolation) procedures to determine the local SAR values at the spatial resolution needed for mass averaging.

4.11. Operational Conditions during Test

4.11.1. General Description of Test Procedures

The sample enter into 100% duty cycle continuous transmit controlled by software (*#*#6843#*#*) provied by application.
For WWAN power measurement, use base station simulator connection with RF cable, at maximum power in each supported wireless interface and frequency band.
Read the WWAN RF power level from the base station simulator.
Connect EUT RF port through RF cable to the power meter, and measure WLAN/BT output power.

4.12. Position of the wireless device in relation to the phantom

4.12.1 Head Configuration

Measurements were made in Check and Tilt positions on both the left hand and right hand sides of the phantom.
The positions used in the measurements for Determing the Peak Spatial-Average Specific Absorption Rate (SAR) in the Human Head from Wireless communications devices.

4.12.2 Body Configuration

The overall diagonal dimension of the display section of a tablet is 21.6 cm > 20 cm, Per FCC KDB 616217 Tablet host platform test requirements, the back surface and edges of the tablet should be tested for SAR compliance with the tablet touching the phantom. Exposures from antennas through the front (top) surface of the display section of a full-size tablet, away from the edges, are generally limited to the user's hands. Exposures to hands for typical consumer transmitters used in tablets are not expected to exceed the extremity SAR limit; therefore, SAR evaluation for the front surface of tablet display screens are generally not necessary, except for tablets that are designed to require continuous operations with the hand(s) next to the antenna(s). Per KDB 648474 SAR Evaluation Considerations for Wireless Handsets, when the over diagonal dimension of the device is > 20.0 cm. Hotspot mode SAR is not required when normal tablet procedures are applied. Extremity 10-g SAR is also not required for the front (top) surface of large form factor full size tablets. The more conservative tablet SAR results can be used to supported the 10-g extremity SAR for phablet mode.

○ Test Position 1: The rear surface of the EUT towards the bottom of the flat phantom;
○ Test Position 2: The left surface of the EUT towards the bottom of the flat phantom;
○ Test Position 3: The right surface of the EUT towards the bottom of the flat phantom;
○ Test Position 4: The top surface of the EUT towards the bottom of the flat phantom;
○ Test Position 5: The bottom surface of the EUT towards the bottom of the flat phantom;

4.12.3 SAM Phantom Limitations Configuration

The antennas of recent generation phones are typically incorporated near the sides and along edges of the phone. Occasionally, a phone with antennas located near the bottom or lower side edges may have peak SAR locations near the mouth and jaw regions or along the steep curved surfaces of the SAM phantom where SAR probe access is not feasible with a horizontally configured SAM phantom. It has been known for some time that there are also other SAR measurement difficulties in the tight regions of the SAM phantom with no easy solution. SAR probes are calibrated in tissue-equivalent medium with sufficient separation between the probe sensors and nearby physical boundaries to ensure field scattering does not affect the probe calibration. When the probe tip is positioned in tight areas, such as in the mouth and jaw regions of the SAM phantom,

with multiple boundaries surrounding the probe sensors, the probe calibration and measurement accuracy can become questionable. In addition, measurements near these locations with steep curvatures may require a probe to be tilted at steep angles that may no longer comply with the required calibration requirements and measurement protocols for maintaining measurement accuracy and uncertainty. For some situations, it is just not feasible to tilt the probe without using a rotated SAM phantom that are specifically constructed to enable probe access below the cheek and near the jaw area.11 When a rotated SAM phantom is not used, the measured SAR distribution is often clipped and showing only part of the SAR distribution under consideration.

4.13. Test Configuration

4.13.2 GSM Test Configuration

SAR tests for GSM 850 and GSM 1900, a communication link is set up with a System Simulator (SS) by air link. Using CMU200 the power level is set to “5” for GSM 850, set to “0” for GSM 1900. Since the GPRS class is 12 for this EUT, it has at most 4 timeslots in uplink and at most 4 timeslots in downlink, the maximum total timeslots is 5. the EGPRS class is 12 for this EUT, it has at most 4 timeslots in uplink and at most 4 timeslots in downlink, the maximum total timeslots is 5.

SAR test reduction for GPRS and EDGE modes is determined by the source-based time-averaged output power specified for production units, including tune-up tolerance. The data mode with highest specified time-averaged output power should be tested for SAR compliance in the applicable exposure conditions. For modes with the same specified maximum output power and tolerance, the higher number time-slot configuration should be tested. GSM voice and GPRS data use GMSK, which is a constant amplitude modulation with minimal peak to average power difference within the time-slot burst. For EDGE, GMSK is used for MCS 1 – MCS 4 and 8-PSK is used for MCS 5 – MCS 9; where 8-PSK has an inherently higher peak-to-average power ratio. The GMSK and 8-PSK EDGE configurations are considered separately for SAR compliance. The GMSK EDGE configurations are grouped with GPRS and considered with respect to time-averaged maximum output power to determine compliance. The 3G SAR test reduction procedure is applied to 8-PSK EDGE with GMSK GPRS/EDGE as the primary mode.

4.13.1. WLAN Test Configuration

For WiFi SAR testing, WiFi engineering testing software installed on the DUT can provide continuous transmitting RF signal. This RF signal utilized in SAR measurement has almost 100% duty cycle and its crest factor is 1.
The SAR measurement and test reduction procedures are structured according to either the DSSS or OFDM transmission mode configurations used in each standalone frequency band and aggregated band. For devices that operate in exposure configurations that require multiple test positions, additional SAR test reduction may be applied. The maximum output power specified for production units, including tune-up tolerance, are used to determine initial SAR test requirements for the 802.11 transmission modes in a frequency band. SAR is measured using the highest measured maximum output power channel for the initial test configuration. SAR measurement and test reduction for the remaining 802.11 modes and test channels are determined according to measured or specified maximum output power and reported SAR of the initial measurements. The general test reduction and SAR measurement approaches are summarized in the following:
1. The maximum output power specified for production units are determined for all applicable 802.11 transmission modes in each standalone and aggregated frequency band. Maximum output power is measured for the highest maximum output power configuration(s) in each frequency band according to the default power measurement procedures.
2. For OFDM transmission configurations in the 2.4 GHz and 5 GHz bands, an “initial test configuration” is first determined for each standalone and aggregated frequency band according to the maximum output power and tune-up tolerance specified for production units.
a. When the same maximum power is specified for multiple transmission modes in a frequency band, the largest channel bandwidth, lowest order modulation, lowest data rate and lowest order 802.11a/g/n/ac mode is used for SAR measurement, on the highest measured output power channel in the initial test configuration, for each frequency band.
b. SAR is measured for OFDM configurations using the initial test configuration procedures. Additional frequency band specific SAR test reduction may be considered for individual frequency bands
c. Depending on the reported SAR of the highest maximum output power channel tested in the initial test configuration, SAR test reduction may apply to subsequent highest output channels in the initial test configuration to reduce the number of SAR measurements.
3. The Initial test configuration does not apply to DSSS. The 2.4 GHz band SAR test requirements and 802.11b DSSS procedures are used to establish the transmission configurations required for SAR measurement.

4. An “initial test position”is applied to further reduce the number of SAR tests for devices operating in next to the ear, UMPC mini-tablet mode exposure configurations that require multiple test positions .
a. SAR is measured for 802.11b according to the 2.4 GHz DSSS procedure using the exposure condition established by the initial test position.
b. SAR is measured for 2.4 GHz and 5 GHz OFDM configurations using the initial test configuration. 802.11b/g/n operating modes are tested independently according to the service requirements in each frequency band. 802.11b/g/n modes are tested on the maximum average output channel.
5. The Initial test position does not apply to devices that require a fixed exposure test position. SAR is measured in a fixed exposure test position for these devices in 802.11b according to the 2.4 GHz DSSS procedure or in 2.4 GHz and 5 GHz OFDM configurations using the initial test configuration procedures .
6. The “subsequent test configuration”procedures are applied to determine if additional SAR measurements are required for the remaining OFDM transmission modes that have not been tested in the initial test configuration. SAR test exclusion is determined according to reported SAR in the initial test configuration and maximum output power specified or measured for these other OFDM configurations.

SAR Procedures
Separate SAR procedures are applied to DSSS and OFDM configurations in the 2.4 GHz band to simplify DSSS test requirements. For 802.11b DSSS SAR measurements, DSSS SAR procedure applies to fixed exposure test position and initial test position procedure applies to multiple exposure test positions. When SAR measurement is required for an OFDM configuration, the initial test configuration, subsequent test configuration and initial test position procedures are applied. The SAR test exclusion requirements for 802.11g/n OFDM configurations are described in section 5.2.2.
1. 802.11b DSSS SAR Test Requirements
SAR is measured for 2.4 GHz 802.11b DSSS using either a fixed test position or, when applicable, the initial test position procedure. SAR test reduction is determined according to the following:
a. When the reported SAR of the highest measured maximum output power channel (section 3.1) for the exposure configuration is ≤ 0.8 W/kg, no further SAR testing is required for 802.11b DSSS in that exposure configuration.
b. When the reported SAR is > 0.8 W/kg, SAR is required for that exposure configuration using the next highest measured output power channel. When any reported SAR is > 1.2 W/kg, SAR is required for the third channel; i.e., all channels require testing.
1. 2.4 GHz 802.11g/n OFDM SAR Test Exclusion Requirements
When SAR measurement is required for 2.4 GHz 802.11g/n OFDM configurations, the measurement and test reduction procedures for OFDM are applied (section 5.3). SAR is not required for the following 2.4 GHz OFDM conditions.
a. When KDB Publication 447498 SAR test exclusion applies to the OFDM configuration
b. When the highest reported SAR for DSSS is adjusted by the ratio of OFDM to DSSS specified maximum output power and the adjusted SAR is ≤ 1.2 W/kg.
2. SAR Test Requirements for OFDM Configurations
When SAR measurement is required for 802.11 a/g/n/ac OFDM configurations, each standalone and frequency aggregated band is considered separately for SAR test reduction. When the same transmitter and antenna(s) are used for U-NII-1 and U-NII-2A bands, additional SAR test reduction applies. When band gap channels between U-NII-2C band and 5.8 GHz U-NII-3 or §15.247 band are supported, the highest maximum output power transmission mode configuration and maximum output power channel across the bands must be used to determine SAR test reduction, according to the initial test configuration and subsequent test configuration requirements.20 In applying the initial test configuration and subsequent test configuration procedures, the 802.11 transmission configuration with the highest specified maximum output power and the channel within a test configuration with the highest measured maximum output power should be clearly distinguished to apply the procedures.
3. OFDM Transmission Mode SAR Test Configuration and Channel Selection Requirements
The initial test configuration for 2.4 GHz and 5 GHz OFDM transmission modes is determined by the 802.11 configuration with the highest maximum output power specified for production units, including tune-up tolerance, in each standalone and aggregated frequency band. SAR for the initial test configuration is measured using the highest maximum output power channel determined by the default power measurement procedures (section 4). When multiple configurations in a frequency band have the same specified maximum output power, the initial test configuration is determined according to the following steps applied sequentially.
a. The largest channel bandwidth configuration is selected among the multiple configurations with the same specified maximum output power.
b. If multiple configurations have the same specified maximum output power and largest channel bandwidth, the lowest order modulation among the largest channel bandwidth configurations is selected.
c. If multiple configurations have the same specified maximum output power, largest channel bandwidth and lowest order modulation, the lowest data rate configuration among these configurations is selected.

d. When multiple transmission modes (802.11a/g/n/ac) have the same specified maximum output power, largest channel bandwidth, lowest order modulation and lowest data rate, the lowest order 802.11 mode is selected; i.e., 802.11a is chosen over 802.11n then 802.11ac or 802.11g is chosen over 802.11n.
After an initial test configuration is determined, if multiple test channels have the same measured maximum output power, the channel chosen for SAR measurement is determined according to the following. These channel selection procedures apply to both the initial test configuration and subsequent test configuration(s), with respect to the default power measurement procedures or additional power measurements required for further SAR test reduction. The same procedures also apply to subsequent highest output power channel(s) selection.
   a. When there are multiple test channels with the same measured maximum output power, the channel closest to mid-band frequency is selected for SAR measurement.
   b. When there are multiple test channels with the same measured maximum output power and equal separation from mid-band frequency; for example, high and low channels or two mid-band channels, the higher frequency (number) channel is selected for SAR measurement.

Initial Test Configuration Procedures
An initial test configuration is determined for OFDM transmission modes according to the channel bandwidth, modulation and data rate combination(s) with the highest maximum output power specified for production units in each standalone and aggregated frequency band. SAR is measured using the highest measured maximum output power channel. For configurations with the same specified or measured maximum output power, additional transmission mode and test channel selection procedures are required (see section 5.3.2). SAR test reduction of subsequent highest output test channels is based on the reported SAR of the initial test configuration.
For next to the ear and UMC mini-tablet exposure configurations where multiple test positions are required, the initial test position procedure is applied to minimize the number of test positions required for SAR measurement using the initial test configuration transmission mode.23 For fixed exposure conditions that do not have multiple SAR test positions, SAR is measured in the transmission mode determined by the initial test configuration. When the reported SAR of the initial test configuration is > 0.8 W/kg, SAR measurement is required for the subsequent next highest measured output power channel(s) in the initial test configuration until the reported SAR is ≤ 1.2 W/kg or all required channels are tested.

4. Subsequent Test Configuration Procedures

SAR measurement requirements for the remaining 802.11 transmission mode configurations that have not been tested in the initial test configuration are determined separately for each standalone and aggregated frequency band, in each exposure condition, according to the maximum output power specified for production units. The initial test position procedure is applied to next to the ear, UMPC mini-tablet mode configurations. When the same maximum output power is specified for multiple transmission modes, the procedures in section 5.3.2 are applied to determine the test configuration. Additional power measurements may be required to determine if SAR measurements are required for subsequent highest output power channels in a subsequent test configuration. The subsequent test configuration and SAR measurement procedures are described in the following.

a. When SAR test exclusion provisions of KDB Publication 447498 are applicable and SAR measurement is not required for the initial test configuration, SAR is also not required for the next highest maximum output power transmission mode subsequent test configuration(s) in that frequency band or aggregated band and exposure configuration.
b. When the highest reported SAR for the initial test configuration (when applicable, include subsequent highest output channels), according to the initial test position or fixed exposure position requirements, is adjusted by the ratio of the subsequent test configuration to initial test configuration specified maximum output power and the adjusted SAR is ≤ 1.2 W/kg, SAR is not required for that subsequent test configuration.
C. The number of channels in the initial test configuration and subsequent test configuration can be different due to differences in channel bandwidth. When SAR measurement is required for a subsequent test configuration and the channel bandwidth is smaller than that in the initial test configuration, all channels in the subsequent test configuration that overlap with the larger bandwidth channel tested in the initial test configuration should be used to determine the highest maximum output power channel. This step requires additional power measurement to identify the highest maximum output power channel in the subsequent test configuration to determine SAR test reduction.
   1). SAR should first be measured for the channel with highest measured output power in the subsequent test configuration.
   2). SAR for subsequent highest measured maximum output power channels in the subsequent test configuration is required only when the reported SAR of the preceding higher maximum output power channel(s) in the subsequent test configuration is > 1.2 W/kg or until all required channels are tested.
   a) For channels with the same measured maximum output power, SAR should be measured using the channel closest to the center frequency of the larger channel bandwidth channel in the initial test configuration.
   D. SAR measurements for the remaining highest specified maximum output power OFDM transmission mode configurations that have not been tested in the initial test configuration (highest maximum

output) or subsequent test configuration(s) (subsequent next highest maximum output power) is determined by applying the subsequent test configuration procedures in this section to the remaining configurations according to the following:

1) replace “subsequent test configuration” with “next subsequent test configuration” (i.e., subsequent next highest specified maximum output power configuration)
2) replace “initial test configuration” with “all tested higher output power configurations.

4.14. Power Drift

To control the output power stability during the SAR test, DASY5 system calculates the power drift by measuring the E-field at the same location at the beginning and at the end of the measurement for each test position. These drift values can be found in Table 14.1 to Table 14.11 labeled as: (Power Drift [dB]). This ensures that the power drift during one measurement is within 5%.

4.15. Power Reduction

The product without any power reduction.

5. TEST CONDITIONS AND RESULTS

5.1. Conducted Power Results

According KDB 447498 D01 General RF Exposure Guidance v06 Section 4.1 2) states that "Unless it is specified differently in the published RF exposure KDB procedures, these requirements also apply to test reduction and test exclusion considerations. Time-averaged maximum conducted output power applies to SAR and, as required by § 2.1091(c), time-averaged ERP applies to MPE. When an antenna port is not available on the device to support conducted power measurement, such as FRS and certain Part 15 transmitters with built-in integral antennas, the maximum output power allowed for production units should be used to determine RF exposure test exclusion and compliance."

<GSM Conducted Power>

General Note:

1. Per KDB 447498 D01v06, the maximum output power channel is used for SAR testing and for further SAR test reduction.
2. According to October 2013TCB Workshop, for GSM / GPRS / EGPRS, the number of time slots to test for SAR should correspond to the highest frame-average maximum output power configuration, considering the possibility of e.g. 3rd party VoIP operation for head and body-worn SAR testing, the EUT was set in GPRS (4Tx slot) for GSM850/GSM1900 band due to their highest frame-average power.
3. For hotspot mode SAR testing, GPRS / EDGE should be evaluated, therefore the EUT was set in GPRS (4 Tx slots) for GSM850/GSM1900 band due to its highest frame-average power.

Conducted Power Measurement Results(GSM900/1800)

GSM 850		Burst Conducted power (dBm)			/	Average power (dBm)		
		Channel/Frequency(MHz)				Channel/Frequency(MHz)		
		128/824.2	190/836.6	251/848.8		128/824.2	190/836.6	251/848.8
GSM (Voice)		32.80	32.59	32.71	-9.03dB	23.77	23.56	23.68
GPRS (GMSK)	1TX slot	32.65	32.31	32.56	-9.03dB	23.62	23.28	23.53
	2TX slot	30.57	30.20	30.25	-6.02dB	24.55	24.18	24.23
	3TX slot	29.71	29.69	28.21	-4.26dB	**25.45**	**25.43**	**24.95**
	4TX slot	27.58	27.52	27.45	-3.01dB	24.57	24.51	24.44
GSM 1900		**Burst Conducted power (dBm)**			**/**	**Average power (dBm)**		
		Channel/Frequency(MHz)				**Channel/Frequency(MHz)**		
		512/ 1850.2	**661/ 1880**	**810/ 1909.8**		**512/ 1850.2**	**661/ 1880**	**810/ 1909.8**
GSM (Voice)		30.35	30.67	30.47	-9.03dB	21.32	21.64	21.44
GPRS (GMSK)	1TX slot	29.26	29.39	29.26	-9.03dB	20.23	20.36	20.23
	2TX slot	27.26	27.07	27.12	-6.02dB	21.24	21.05	21.10
	3TX slot	26.73	26.55	26.54	-4.26dB	**22.47**	**22.29**	**22.28**
	4TX slot	24.06	24.06	24.14	-3.01dB	21.05	21.05	21.13

Notes:

1) Division Factors

To average the power, the division factor is as follows:

1TX-slot = 1 transmit time slot out of 8 time slots=> conducted power divided by (8/1) => -9.03dB
2TX-slots = 2 transmit time slots out of 8 time slots=> conducted power divided by (8/2) => -6.02dB
3TX-slots = 3 transmit time slots out of 8 time slots=> conducted power divided by (8/3) => -4.26dB
4TX-slots = 4 transmit time slots out of 8 time slots=> conducted power divided by (8/4) => -3.01dB

<WLAN 2.4GHz Conducted Power>

Mode	Channel	Frequency (MHz)	Data rate (Mbps)	Average Output Power (dBm)
IEEE 802.11b	1	2412	1	14.23
			2	14.10
			5.5	14.02
			11	13.88
	6	2437	1	14.17
			2	14.05
			5.5	14.98
			11	14.74

	11	2462	1	**14.41**
			2	14.22
			5.5	14.09
			11	14.00
IEEE 802.11g	1	2412	6	12.67
			9	12.62
			12	12.55
			18	12.49
			24	12.42
			36	12.34
			48	12.29
			54	12.25
	6	2437	6	12.67
			9	12.64
			12	12.56
			18	12.47
			24	12.42
			36	12.35
			48	12.32
			54	12.27
	11	2462	6	12.65
			9	12.60
			12	12.53
			18	12.48
			24	12.40
			36	12.34
			48	12.29
			54	12.23
IEEE 802.11n HT20	1	2412	MCS0	11.93
			MCS1	11.90
			MCS2	11.86
			MCS3	11.85
			MCS4	11.80
			MCS5	11.77
			MCS6	11.71
			MCS7	11.68
	6	2437	MCS0	11.88
			MCS1	11.83
			MCS2	11.79
			MCS3	11.77
			MCS4	11.73
			MCS5	11.72
			MCS6	11.68
			MCS7	11.64
	11	2462	MCS0	11.97
			MCS1	11.94
			MCS2	11.89
			MCS3	11.88
			MCS4	11.85
			MCS5	11.81
			MCS6	11.76
			MCS7	11.76
IEEE 802.11n HT40	3	2422	MCS0	10.55
			MCS1	10.54
			MCS2	10.51
			MCS3	10.48
			MCS4	10.46
			MCS5	10.42
			MCS6	10.40
			MCS7	10.35
	6	2437	MCS0	10.53
			MCS1	10.50

			MCS2	10.48
			MCS3	10.44
			MCS4	10.41
			MCS5	10.37
			MCS6	10.33
			MCS7	10.29
	9	2452	MCS0	10.59
			MCS1	10.56
			MCS2	10.52
			MCS3	10.51
			MCS4	10.47
			MCS5	10.46
			MCS6	10.43
			MCS7	10.38

<Bluetooth Conducted Power>

Mode	Channel	Frequency (MHz)	Conducted Average Power (dBm)
GFSK	00	2402	3.16
	39	2441	3.02
	78	2480	2.94
π/4DQPSK	00	2402	2.45
	39	2441	2.49
	78	2480	2.52
8DPSK	00	2402	2.06
	39	2441	2.17
	78	2480	2.11

5.2. Manufacturing tolerance

GSM Speech

GSM 850 (GMSK) (Burst Average Power)			
Channel	128	190	251
Target (dBm)	32.0	32.0	32.0
Tolerance ±(dB)	1.0	1.0	1.0
GSM 1900 (GMSK) (Burst Average Power)			
Channel	512	661	810
Target (dBm)	30.0	30.0	30.0
Tolerance ±(dB)	1.0	1.0	1.0

GSM 850 GPRS (GMSK) (Burst Average Power)				
Channel		128	190	251
1 Txslot	Target (dBm)	32.0	32.0	32.0
	Tolerance ±(dB)	1.0	1.0	1.0
2 Txslot	Target (dBm)	30.0	30.0	30.0
	Tolerance ±(dB)	1.0	1.0	1.0
3 Txslot	Target (dBm)	29.0	29.0	29.0
	Tolerance ±(dB)	1.0	1.0	1.0
4 Txslot	Target (dBm)	27.0	27.0	27.0
	Tolerance ±(dB)	1.0	1.0	1.0
GSM 1900 GPRS (GMSK) (Burst Average Power)				
Channel		512	661	810
1 Txslot	Target (dBm)	29.0	29.0	29.0
	Tolerance ±(dB)	1.0	1.0	1.0
2 Txslot	Target (dBm)	27.0	27.0	27.0
	Tolerance ±(dB)	1.0	1.0	1.0
3 Txslot	Target (dBm)	26.0	26.0	26.0
	Tolerance ±(dB)	1.0	1.0	1.0
4 Txslot	Target (dBm)	24.0	24.0	24.0
	Tolerance ±(dB)	1.0	1.0	1.0

2.4GHzWLAN

IEEE 802.11b (Average)			
Frequency (MHz)	2412	2437	2462
Target (dBm)	14.0	14.0	14.0
Tolerance ±(dB)	1.0	1.0	1.0
IEEE 802.11g (Average)			
Frequency (MHz)	2412	2437	2462
Target (dBm)	12.0	12.0	12.0
Tolerance ±(dB)	1.0	1.0	1.0
IEEE 802.11n HT20 (Average)			
Frequency (MHz)	2412	2437	2462
Target (dBm)	11.0	11.0	11.0
Tolerance ±(dB)	1.0	1.0	1.0
IEEE 802.11n HT40 (Average)			
Frequency (MHz)	2422	2437	2452
Target (dBm)	10.0	10.0	10.0
Tolerance ±(dB)	1.0	1.0	1.0

Bluetooth

GFSK (Average)			
Frequency (MHz)	2402	2441	2480
Target (dBm)	3.0	3.0	3.0
Tolerance ±(dB)	1.0	1.0	1.0
π/4DQPSK (Average)			
Frequency (MHz)	2402	2441	2480
Target (dBm)	2.0	2.0	2.0
Tolerance ±(dB)	1.0	1.0	1.0
8DPSK (Average)			
Frequency (MHz)	2402	2441	2480
Target (dBm)	2.0	2.0	2.0
Tolerance ±(dB)	1.0	1.0	1.0

5.3. Transmit Antennas Position

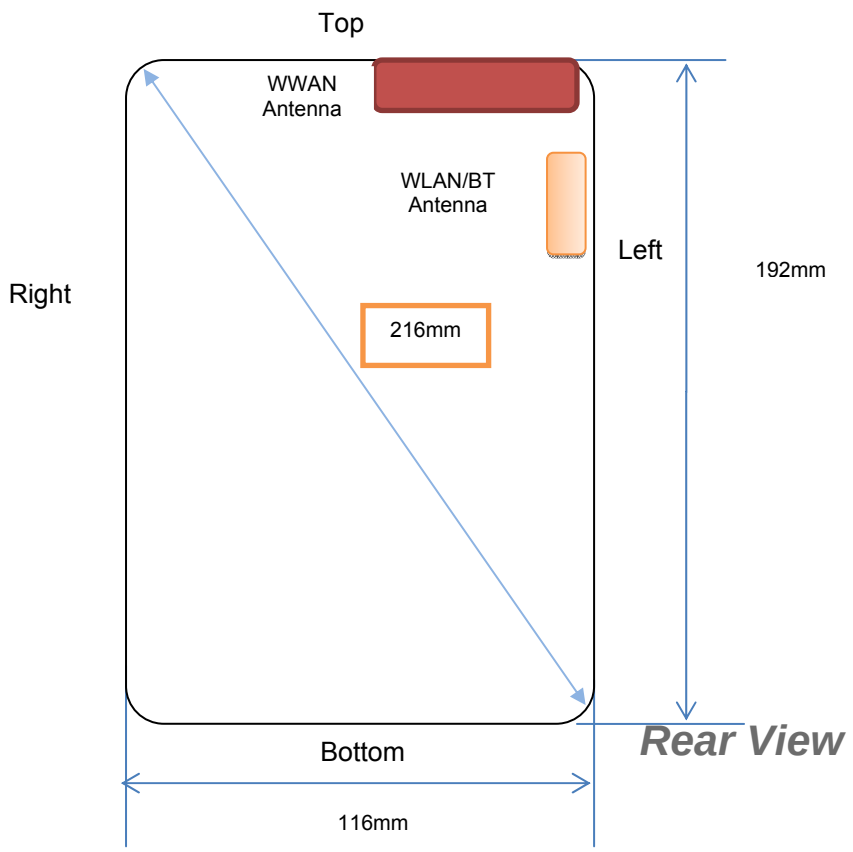

Antenna information:

WWAN	GSM TX/RX Antenna
WLAN/GPS/BT	WLAN/BT TX/RX Antenna

Distance of The Antenna to the EUT surface and edge						
Antennas	**Front**	**Rear**	**Top**	**Bottom**	**Left**	**Right**
BT/WLAN	<5mm	<5mm	38mm	130mm	<5mm	114mm
WWAN	<5mm	<5mm	<5mm	180mm	<5mm	70mm

5.4. Standalone SAR Test Exclusion Considerations

Per KDB447498 for standalone 1-g head or body SAR evaluation by measurement or numerical simulation is not required when the corresponding SAR Exclusion Threshold condition, listed below, is satisfied.
The 1-g and 10-g SAR test exclusion thresholds for 100 MHz to 6 GHz at test separation distances ≤ 50 mm are determined by:
[(max. power of channel, including tune-up tolerance, mW) / (min. test separation distance, mm)] ·[√ f(GHz)] ≤ 3.0 for 1-g SAR and ≤ 7.5 for 10-g extremity SAR, where

- f(GHz) is the RF channel transmit frequency in GHz
- Power and distance are rounded to the nearest mW and mm before calculation
- The result is rounded to one decimal place for comparison
- 3.0 and 7.5 are referred to as the numeric thresholds in the step 2 below

Per KDB 248227 D01 802.11 Wi-Fi SAR v02 for the simultaneous transmission conditions for MIMO, TxBF and other similar configurations must be considered separately for each standalone and aggregated frequency band according to the 802.11 transmission mode configurations and exposure conditions to determine SAR compliance. The aggregate maximum output power of all simultaneous transmitting antennas in all transmission chains may be used to determine SAR test exclusion for each frequency band and transmission mode configuration. The most conservative SAR test separation distance among the antennas must be used to apply the standalone SAR test exclusion provisions in KDB Publication 447498 D01.
When this power-based standalone SAR test exclusion does not apply, the sum of 1-g SAR provision in KDB Publication 447498 D01 should be used to determine simultaneous transmission SAR test exclusion.

Standalone SAR test exclusion considerations							
Modulation	Frequency (MHz)	Configuration	Maximum Average Power (dBm)	Separation Distance (mm)	Calculation Result	SAR Exclusion Thresholds	Standalone SAR Exclusion
GSM	850	Head	23.97	5	46.0	3.0	no
		Test Position 1	25.74	5	69.0	3.0	no
		Test Position 2	25.74	5	69.0	3.0	no
		Test Position 3	25.74	70	25.74dBm	24.41dBm	no
		Test Position 4	25.74	5	69.0	3.0	no
		Test Position 5	25.74	180	25.74dBm	31.21dBm	yes
GSM	1900	Head	21.97	5	43.4	3.0	no
		Test Position 1	22.74	5	51.8	3.0	no
		Test Position 2	22.74	5	51.8	3.0	no
		Test Position 3	22.74	70	22.74dBm	27.84dBm	yes
		Test Position 4	22.74	5	51.8	3.0	no
		Test Position 5	22.74	180	22.74dBm	32.28dBm	yes
IEEE 802.11b	2450	Head	15.00	5	9.9	3.0	no
		Test Position 1	15.00	5	9.9	3.0	no
		Test Position 2	15.00	5	9.9	3.0	no
		Test Position 3	15.00	114	15.00dBm	28.67dBm	yes
		Test Position 4	15.00	38	1.3	3.0	yes
		Test Position 5	15.00	130	15.00dBm	29.52dBm	yes
IEEE 802.11g	2450	Head	13.00	5	6.2	3.0	no
		Test Position 1	13.00	5	6.2	3.0	no
		Test Position 2	13.00	5	6.2	3.0	no
		Test Position 3	13.00	114	13.00dBm	28.67dBm	yes
		Test Position 4	13.00	38	0.8	3.0	yes
		Test Position 5	13.00	130	13.00dBm	29.52dBm	yes
IEEE	2450	Head	12.00	5	5.0	3.0	no

802.11n HT20		Test Position 1	12.00	5	5.0	3.0	no
		Test Position 2	12.00	5	5.0	3.0	no
		Test Position 3	12.00	114	12.00dBm	28.67dBm	yes
		Test Position 4	12.00	38	0.7	3.0	yes
		Test Position 5	12.00	130	12.00dBm	29.52dBm	yes
IEEE 802.11n HT40	2450	Head	11.0	5	3.9	3.0	no
		Test Position 1	11.0	5	3.9	3.0	no
		Test Position 2	11.0	5	3.9	3.0	no
		Test Position 3	11.0	114	11.00dBm	28.67dBm	yes
		Test Position 4	11.0	38	0.5	3.0	yes
		Test Position 5	11.0	130	11.00dBm	29.52dBm	yes
Bluetooth*	2450	Head	4.0	5	0.8	3.0	no
		Test Position 1	4.0	5	0.8	3.0	no
		Test Position 2	4.0	5	0.8	3.0	no
		Test Position 3	4.0	114	4.00dBm	28.67dBm	no
		Test Position 4	4.0	38	0.1	3.0	no
		Test Position 5	4.0	130	4.00dBm	29.52dBm	no

Remark:
1. *Maximum average power including tune-up tolerance;*
2. *When the minimum test separation distance is < 5 mm, a distance of 5 mm is applied to determine SAR test exclusion*
3. *Per KDB 648474, if overall diagonal dimension of the display section of a tablet lager than 20 cm, no need consider Hotspot mode.*
4. *Body as body use distance is 0mm from manufacturer declaration of user manual.*

5.5. Standalone Estimated SAR

Per KDB447498 requires when the standalone SAR test exclusion of section 4.3.1 is applied to an antenna that transmits simultaneously with other antennas, the standalone SAR must be estimated according to the following to determine simultaneous transmission SAR test exclusion;

● (max. power of channel, including tune-up tolerance, mW)/ (min. test separation distance, mm)] • [√ f(GHz)/x] W/kg for test separation distances ≤ 50 mm;

Where x = 7.5 for 1-g SAR, and x = 18.75 for 10-g SAR.

● 0.4 W/kg for 1-g SAR and 1.0 W/kg for 10-g SAR, when the test separation distances is > 50 mm

Per FCC KD B447498 D01, simultaneous transmission SAR test exclusion may be applied when the sum of the 1-g SAR for the entire transmitting antenna in a specific a physical test configuration is ≤1.6 W/Kg. When the sum is greater than the SAR limit, AR test exclusion is determined by the SAR to peak location separation ratio.

$$\text{Ratio}=\frac{(\text{SAR}_1+\text{SAR}_2)^{1.5}}{(\text{peak location separation,mm})}<0.04$$

Estimated Standalone SAR

Estimated stand alone SAR					
Communication system	Frequency (MHz)	Configuration	Maximum Power (dBm)	Separation Distance (mm)	Estimated SAR_{1-g} (W/kg)
Bluetooth*	2450	Head	4.00	5.00	0.104
		Test Position 1	4.00	5.00	0.104
		Test Position 2	4.00	5.00	0.104

Remark:
1. *Maximum average power including tune-up tolerance;*
2. *When the minimum test separation distance is < 5 mm, a distance of 5 mm is applied to determine SAR test exclusion*

5.6. SAR Measurement Results

The calculated SAR is obtained by the following formula:

Reported SAR=Measured SAR*$10^{(Ptarget-Pmeasured))/10}$

Scaling factor=$10^{(Ptarget-Pmeasured))/10}$

Reported SAR= Measured SAR* Scaling factor

Where P_{target} is the power of manufacturing upper limit;

$P_{measured}$ is the measured power;

Measured SAR is measured SAR at measured power which including power drift)

Reported SAR which including Power Drift and Scaling factor

Duty Cycle

Test Mode	Duty Cycle
GSM (Voice)	1:8
GPRS850	1:2.67
GPRS1900	1:2.67
2.4GWLAN	1:1

5.7. SAR Reporting Results

<Standalone SAR >

Table 7: SAR Values [GSM850]

Ch.	*Freq. (MHz)*	*Time slots*	*Test Position*	*Conducted Power (dBm)*	*Maximum Allowed Power (dBm)*	*Power drift*	*Scaling Factor*	*SAR_{1-g} results(W/Kg)*		*Graph Results*
								Measured	*Reported*	
measured / reported SAR numbers - Head										
128	824.20	GSM	Right Cheek	32.80	33.00	-0.12	1.047	0.101	0.106	
128	824.20	GSM	Right Tilt	32.80	33.00	-0.07	1.047	0.144	0.151	
128	824.20	GSM	Left Cheek	32.80	33.00	0.02	1.047	**0.188**	**0.197**	Plot 1
128	824.20	GSM	Left Tilt	32.80	33.00	-0.03	1.047	0.167	0.175	
measured / reported SAR numbers - Body (distance 0mm)										
128	824.20	3Txslots	Test Position 1	29.71	30.00	0.06	1.069	**0.688**	**0.735**	Plot 2
190	836.60	3Txslots	Test Position 2	29.71	30.00	-0.02	1.069	0.664	0.710	
190	836.60	3Txslots	Test Position 3	29.71	30.00	-0.10	1.069	0.239	0.255	
190	836.60	3Txslots	Test Position 4	29.71	30.00	0.07	1.069	0.642	0.686	

Remark:

1. The value with block color is the maximum SAR Value of each test band.

2. Per FCC KDB Publication 447498 D01, if the reported (scaled) SAR measured at the middle channel or highest output power channel for each test configuration is ≤ 0.8 W/kg then testing at the other channels is optional for such test configuration(s).

Table 8: SAR Values [GSM1900]

Ch.	Freq. (MHz)	Time slots	Test Position	Conducted Power (dBm)	Maximum Allowed Power (dBm)	Power drift	Scaling Factor	SAR_{1-g} results(W/Kg)		Graph Results
								Measured	Reported	
measured / reported SAR numbers - Head										
661	1880.0	GSM	Right Cheek	30.67	31.00	-0.05	1.079	0.196	0.211	
661	1880.0	GSM	Right Tilt	30.67	31.00	0.03	1.079	0.251	0.271	
661	1880.0	GSM	Left Cheek	30.67	31.00	0.02	1.079	**0.443**	**0.478**	Plot 3
661	1880.0	GSM	Left Tilt	30.67	31.00	-0.10	1.079	0.318	0.343	
measured / reported SAR numbers - Body (distance 0mm)										
512	1850.2	3Txslots	Test Position 1	26.73	27.00	0.02	1.064	0.806	0.858	
661	1880.0	3Txslots		26.55	27.00	-0.03	1.109	**0.828**	**0.918**	4
810	1909.8	3Txslots		26.54	27.00	-0.12	1.112	0.711	0.791	
512	1850.2	3Txslots	Test Position 2	26.73	27.00	0.01	1.064	0.812	0.864	
661	1880.0	3Txslots		26.55	27.00	0.15	1.109	0.825	0.915	
810	1909.8	3Txslots		26.54	27.00	-0.05	1.112	0.689	0.766	
512	1850.2	3Txslots	Test Position 3	26.73	27.00	-0.03	1.064	0.266	0.283	
512	1850.2	3Txslots	Test Position 4	26.73	27.00	0.14	1.064	0.801	0.852	
661	1880.0	3Txslots		26.55	27.00	-0.06	1.109	0.817	0.906	
810	1909.8	3Txslots		26.54	27.00	-0.11	1.112	0.688	0.765	

Remark:
1. The value with block color is the maximum SAR Value of each test band.
2. Per FCC KDB Publication 447498 D01, if the reported (scaled) SAR measured at the middle channel or highest output power channel for each test configuration is ≤ 0.8 W/kg then testing at the other channels is optional for such test configuration(s).

Table 9: SAR Values [2.45GWLAN IEEE 802.11b]

Ch.	Freq. (MHz)	Time slots	Test Position	Conducted Power (dBm)	Maximum Allowed Power (dBm)	Power drift	Scaling Factor	SAR_{1-g} results(W/Kg)		Graph Results
								Measured	Reported	
measured / reported SAR numbers - Head										
11	2462	GSM	Right Cheek	14.41	15.00	0.12	1.146	0.111	0.127	
11	2462	GSM	Right Tilt	14.41	15.00	-0.11	1.146	0.156	0.179	
11	2462	GSM	Left Cheek	14.41	15.00	-0.04	1.146	**0.191**	**0.219**	Plot 5
11	2462	GSM	Left Tilt	14.41	15.00	0.05	1.146	0.177	0.203	
measured / reported SAR numbers - Body (distance 0mm)										
11	2462	3Txslots	Test Position 1	14.41	15.00	0.01	1.146	**0.494**	**0.566**	Plot 6
11	2462	3Txslots	Test Position 2	14.41	15.00	-0.07	1.146	0.482	0.552	

Remark:
1. The value with blue color is the maximum SAR Value of each test band.
2. Per FCC KDB Publication 447498 D01, if the reported (scaled) SAR measured at the middle channel or highest output power channel for each test configuration is ≤ 0.8 W/kg then testing at the other channels is optional for such test configuration(s).
3. SAR is not required for the following 2.4 GHz OFDM conditions as the highest reported SAR for DSSS is adjusted by the ratio of OFDM to DSSS specified maximum output power and the adjusted SAR is 0.35 [0.566(19.59/31.62)] ≤ 1.2 W/Kg.*

5.8. Simultaneous TX SAR Considerations

5.8.1 Introduction

The following procedures adopted from “FCC SAR Considerations for Cell Phones with Multiple Transmitters” are applicable to handsets with built-in unlicensed transmitters such as 802.11 a/b/g/n and Bluetooth devices which may simultaneously transmit with the licensed transmitter.
For the DUT,the BT and 2.4GWLAN modules sharing same antenna,GSM module sharing a single antenna; 2.4GWLAN and GSM share difference antenna, can simultaneous transmit, need consider simultaneous.

Application Simultaneous Transmission information:

Air-Interface	Band (MHz)	Type	Simultaneous Transmissions	Voice over Digital Transport(Data)
GSM	850	VO	Yes,WLAN or BT	N/A
	1900	VO		
	GPRS	DT	Yes,WLAN or BT	N/A
WLAN	2450	DT	Yes,GSM,GPRS	Yes
BT	2450	DT	Yes,GSM,GPRS	N/A
Note:VO-Voice Service only;DT-Digital Transport				

Remark:

1. *BT and WLAN can be active at the same time, but only with interleaving of packages switched on board level. That means that they don't transmit at the same time.*

5.8.2 Evaluation of Simultaneous SAR

The following tables list information which is relevant for the decision if a simultaneous transmit evaluation is necessary according to FCC KDB 447498D01 General RF Exposure Guidance v06.

Head Exposure Conditions

reported SAR WWAN and WLAN 2.4GHz, ΣSAR evaluation, SPLSRi						
Frequency band	Position	SAR_{1-gmax} /W/kg		ΣSAR <1.6W/Kg	Distance Ri, mm	Ratio ≤ 0.040
		WWAN	WLAN			
GSM 850	Right Cheek	0.106	0.127	0.233		
	Right Tilt	0.151	0.179	0.330		
	Left Cheek	**0.197**	**0.219**	0.416		
	Left Tilt	0.175	0.203	0.378		
GSM 1900	Right Cheek	0.211	0.127	0.338		
	Right Tilt	0.271	0.179	0.450		
	Left Cheek	**0.478**	**0.219**	**0.697**		
	Left Tilt	0.343	0.203	0.546		

reported SAR WWAN and BT, ΣSAR evaluation, SPLSRi						
Frequency band	Position	SAR_{1-gmax} /W/kg		ΣSAR <1.6W/Kg	Distance Ri, mm	Ratio ≤ 0.040
		WWAN	BT			
GSM 850	Right Cheek	0.106	0.104	0.210		
	Right Tilt	0.151	0.104	0.255		
	Left Cheek	**0.197**	**0.104**	0.301		
	Left Tilt	0.175	0.104	0.279		
GSM 1900	Right Cheek	0.211	0.104	0.315		
	Right Tilt	0.271	0.104	0.375		
	Left Cheek	**0.478**	**0.104**	**0.582**		
	Left Tilt	0.343	0.104	0.447		

Body Exposure Conditions

reported SAR WWAN and WLAN 2.4GHz, ΣSAR evaluation, SPLSRi						
Frequency band	Position	SAR_{1-gmax} /W/kg		ΣSAR <1.6W/Kg	Distance Ri, mm	Ratio ≤ 0.040
		WWAN	WLAN			
GSM 850	Test Position 1	**0.735**	**0.566**	1.301		
	Test Position 2	0.710	0.552	1.262		
	Test Position 3	0.255	n/a	0.255		
	Test Position 4	0.686	n/a	0.686		
GSM 1900	Test Position 1	**0.918**	**0.566**	**1.484**		
	Test Position 2	0.915	0.552	1.467		
	Test Position 3	0.283	n/a	0.283		
	Test Position 4	0.906	n/a	0.906		

reported SAR WWAN and BT, ΣSAR evaluation, SPLSRi						
Frequency band	Position	$SAR_{1\text{-}gmax}$ /W/kg		ΣSAR <1.6W/Kg	Distance Ri, mm	Ratio ≤ 0.040
		WWAN	WLAN			
GSM 850	Test Position 1	**0.735**	**0.104**	0.839		
	Test Position 2	0.710	0.104	0.814		
	Test Position 3	0.255	n/a	0.255		
	Test Position 4	0.686	n/a	0.686		
GSM 1900	Test Position 1	**0.918**	**0.104**	**1.022**		
	Test Position 2	0.915	0.104	1.019		
	Test Position 3	0.283	n/a	0.283		
	Test Position 4	0.906	n/a	0.906		

Remark:
1. BT and WLAN can be active at the same time, but only with interleaving of packages switched on board level. That means that they don't transmit at the same time.
2. The value with block color is the maximum values of standalone
3. The value with blue color is the maximum values of $\sum SAR_{1\text{-}g}$

5.9. SAR Measurement Variability

SAR measurement variability must be assessed for each frequency band, which is determined by the SAR probe calibration point and tissue-equivalent medium used for the device measurements. When both head and body tissue-equivalent media are required for SAR measurements in a frequency band, the variability measurement procedures should be applied to the tissue medium with the highest measured SAR, using the highest measured SAR configuration for that tissue-equivalent medium. The following procedures are applied to determine if repeated measurements are required.

1) Repeated measurement is not required when the original highest measured SAR is < 0.80 W/kg; steps 2) through 4) do not apply.
2) When the original highest measured SAR is ≥ 0.80 W/kg, repeat that measurement once.
3) Perform a second repeated measurement only if the ratio of largest to smallest SAR for the original and first repeated measurements is > 1.20 or when the original or repeated measurement is ≥ 1.45 W/kg (~ 10% from the 1-g SAR limit).
4) Perform a third repeated measurement only if the original, first or second repeated measurement is ≥ 1.5 W/kg and the ratio of largest to smallest SAR for the original, first and second repeated measurements is > 1.20.

The same procedures should be adapted for measurements according to extremity and occupational exposure limits by applying a factor of 2.5 for extremity exposure and a factor of 5 for occupational exposure to the corresponding SAR thresholds.
Thus the following procedures are applied to determine if repeated measurements are required for occupational exposure.

5) Repeated measurement is not required when the original highest measured SAR is < 4.00 W/kg; steps 6) through 8) do not apply.
6) When the original highest measured SAR is ≥ 4.00 W/kg, repeat that measurement once.
7) Perform a second repeated measurement only if the ratio of largest to smallest SAR for the original and first repeated measurements is > 6.00 or when the original or repeated measurement is ≥ 7.25 W/kg (~ 10% from the 1-g SAR limit).
8) Perform a third repeated measurement only if the original, first or second repeated measurement is ≥ 7.5 W/kg and the ratio of largest to smallest SAR for the original, first and second repeated measurements is > 1.20.

Frequency (MHz)	Air Interface	RF Exposure Configuration	Test Position	Repeated SAR (yes/no)	Highest $SAR_{1\text{-}g}$ (W/Kg)	First Repeated	
						$SAR_{1\text{-}g}$ (W/Kg)	Largest to Smallest SAR Ratio
850	GSM850	Standalone	Test Position 1	no	0.688	no	no
1900	GSM190	Standalone	Test Position 1	yes	0.828	0.815	0.98
2450	2.4GWLAN	Standalone	Test Position 1	no	0.494	no	no

5.10. Measurement Uncertainty (300-3000MHz)

Not required as SAR measurement uncertainty analysis is required in SAR reports only when the highest measured SAR in a frequency band is ≥ 1.5 W/kg for 1-g SAR accoridng to KDB865664D01.

5.11. System Check Results

System Performance Check at 835 MHz Head TSL

DUT: Dipole 835 MHz; Type: D835V2; Serial: 4d141

Date/Time: 12/20/2016 09:24:17 AM

Communication System: DuiJiangJi; Frequency: 835 MHz;Duty Cycle: 1:1

Medium parameters used (interpolated): f = 835 MHz; σ = 0.91 S/m; ε_r =42.10; ρ = 1000 kg/m^3

Phantom section: Flat Section

DASY5 Configuration:

Probe: EX3DV4 - SN3836; ConvF(9.42, 9.42, 9.42); Calibrated: 07/07/2016;

Sensor-Surface: 2mm (Mechanical Surface Detection)

Electronics: DAE4 Sn1315; Calibrated: 07/26/2016

Phantom: SAM 1; Type: SAM;

Measurement SW: DASY52, Version 52.8 (2); SEMCAD X Version 14.6.6 (6824)

System Performance Check at 835MHz/Area Scan (61x111x1): Interpolated grid: dx=1.50 mm, dy=1.50 mm

Maximum value of SAR (interpolated) = 1.12 mW/g

System Performance Check at 835MHz/Zoom Scan (5x5x7)/Cube 0: Measurement grid: dx=8mm, dy=8mm, dz=5mm

Reference Value = 37.12 V/m; Power Drift = -0.03 dB

Peak SAR (extrapolated) = 1.55 mW/g

SAR(1 g) = 0.972 mW/g; SAR(10 g) = 0.698 mW/g

Maximum value of SAR (measured) = 1.24 mW/g

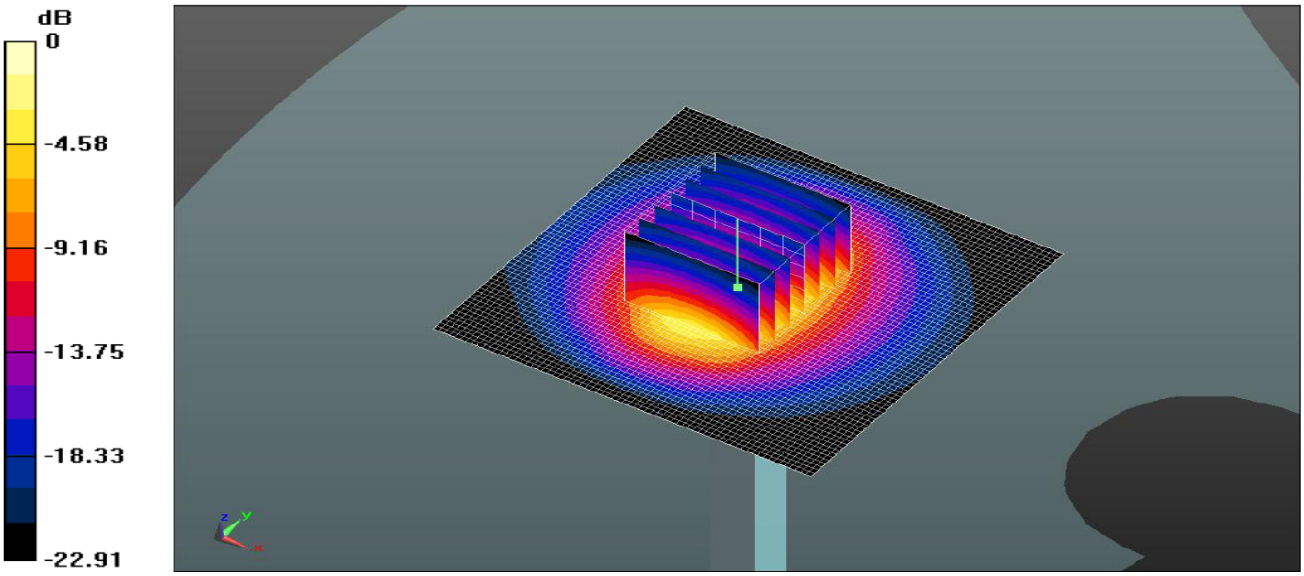

0 dB = 1.24 mW/g = 0.94 dB mW/g

System Performance Check 835MHz Head 100mW

System Performance Check at 835 MHz Body TSL

DUT: Dipole 835 MHz; Type: D835V2; Serial: 4d141

Date/Time: 12/19/2016 09:05:43 AM

Communication System: DuiJiangJi; Frequency: 835 MHz;Duty Cycle: 1:1

Medium parameters used (interpolated): f = 835 MHz; σ = 0.95 S/m; ε_r = 56.80; ρ = 1000 kg/m^3

Phantom section: Flat Section

DASY5 Configuration:

Probe: EX3DV4 - SN3836; ConvF(9.25, 9.25, 9.25); Calibrated: 07/07/2016;

Sensor-Surface: 2mm (Mechanical Surface Detection)

Electronics: DAE4 Sn1315; Calibrated: 07/26/2016

Phantom: ELI 4.0; Type: QDOVA001BA;

Measurement SW: DASY52, Version 52.8 (2); SEMCAD X Version 14.6.6 (6824)

System Performance Check at 835MHz/Area Scan (61x111x1): Interpolated grid: dx=1.50 mm, dy=1.50 mm

Maximum value of SAR (interpolated) = 1.12 mW/g

System Performance Check at 835MHz/Zoom Scan (5x5x7)/Cube 0: Measurement grid: dx=8mm, dy=8mm, dz=5mm

Reference Value = 37.04 V/m; Power Drift = 0.01 dB

Peak SAR (extrapolated) = 1.55 mW/g

SAR(1 g) = 0.966 mW/g; SAR(10 g) = 0.695 mW/g

Maximum value of SAR (measured) = 1.24 mW/g

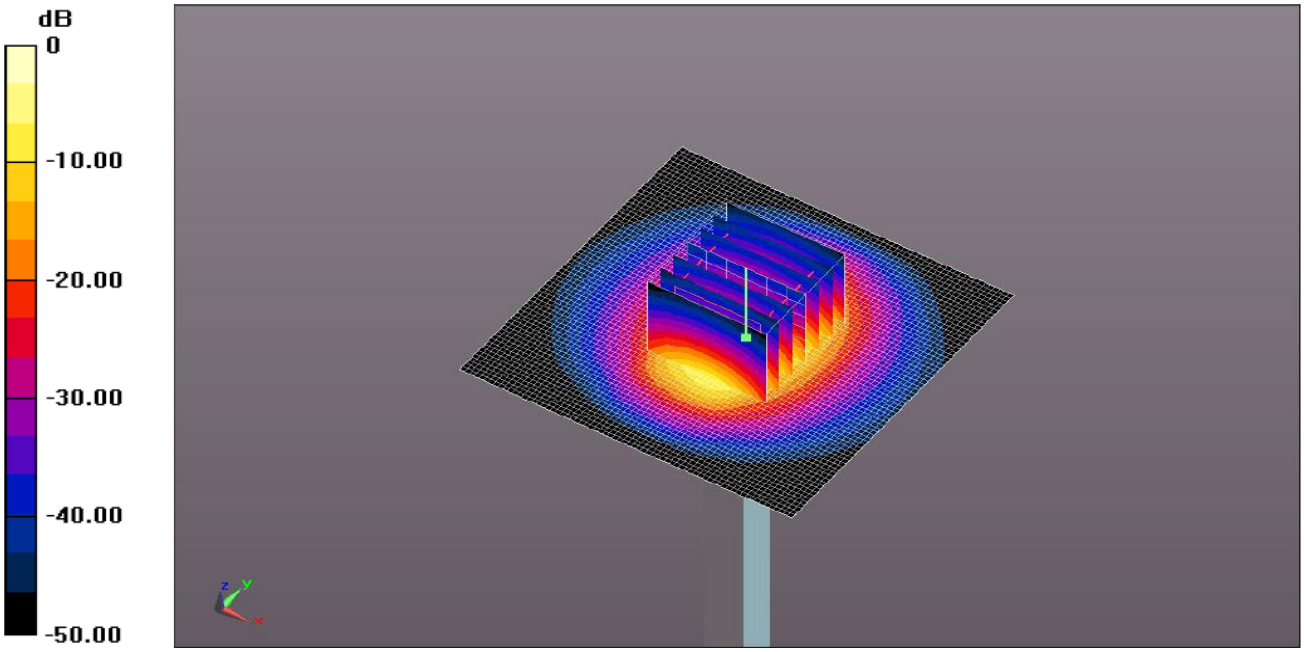

0 dB = 1.24 mW/g = 0.94 dB mW/g

System Performance Check 835MHz Body 100mW

System Performance Check at 1900 MHz Head TSL

DUT: Dipole 1900 MHz; Type: D1900V2; Serial: 5d162

Date/Time: 12/20/2016 13:55:47 PM

Communication System: DuiJiangJi; Frequency: 1900 MHz;Duty Cycle: 1:1

Medium parameters used (interpolated): f = 1900 MHz; σ = 1.81 S/m; ε_r =41.20; ρ = 1000 kg/m^3

Phantom section: Flat Section

DASY5 Configuration:

Probe: EX3DV4 - SN3836; ConvF(7.60, 7.60, 7.60); Calibrated: 07/07/2016;

Sensor-Surface: 2mm (Mechanical Surface Detection)

Electronics: DAE4 Sn1315; Calibrated: 07/26/2016

Phantom: SAM 1; Type: SAM;

Measurement SW: DASY52, Version 52.8 (2); SEMCAD X Version 14.6.6 (6824)

System Performance Check at 1900MHz/Area Scan (61x111x1): Interpolated grid: dx=1.50 mm, dy=1.50 mm

Maximum value of SAR (interpolated) = 5.56 mW/g

System Performance Check at 1900MHz/Zoom Scan (5x5x7)/Cube 0: Measurement grid: dx=8mm, dy=8mm, dz=5mm

Reference Value = 58.45 V/m; Power Drift = 0.06 dB

Peak SAR (extrapolated) = 11.4 mW/g

SAR(1 g) = 4.16 mW/g; SAR(10 g) = 2.04 mW/g

Maximum value of SAR (measured) = 6.76 mW/g

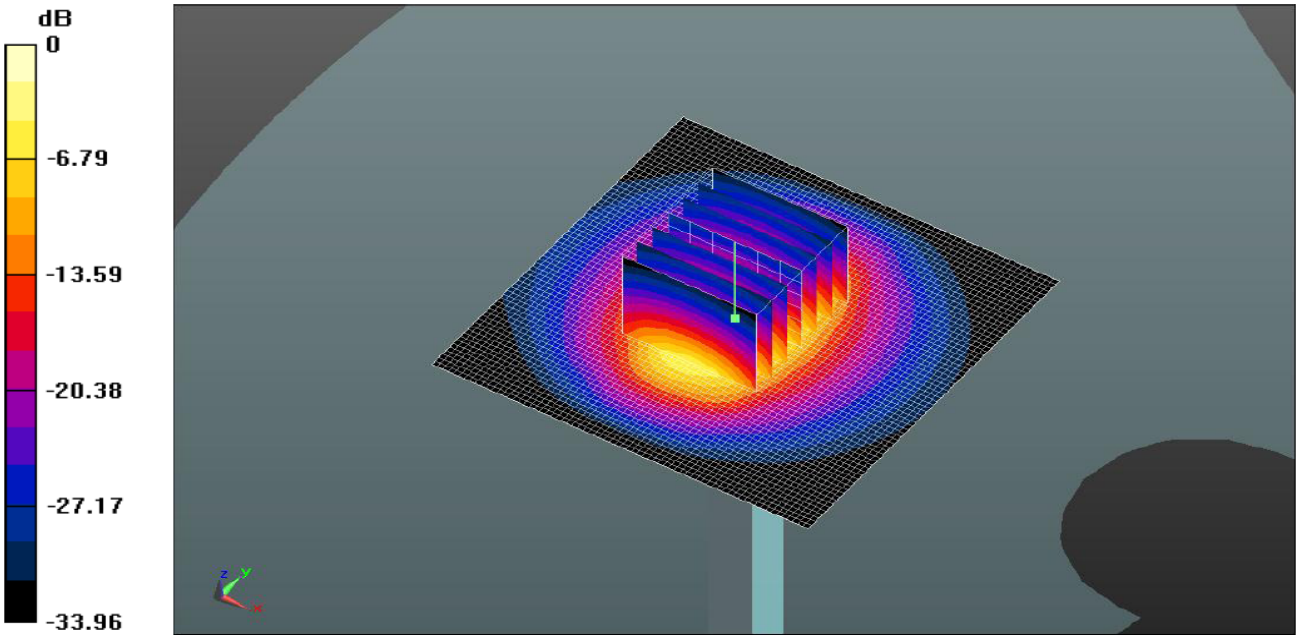

0 dB = 6.76 mW/g = 8.30 dB mW/g

System Performance Check 1900MHz Head 100mW

System Performance Check at 1900 MHz Body TSL

DUT: Dipole 1900 MHz; Type: D1900V2; Serial: 5d162

Date/Time: 12/19/2016 12:45:01 PM

Communication System: DuiJiangJi; Frequency: 1900 MHz;Duty Cycle: 1:1

Medium parameters used (interpolated): f = 1900 MHz; σ = 1.55 S/m; ε_r = 54.55; ρ = 1000 kg/m^3

Phantom section: Flat Section

DASY5 Configuration:

Probe: EX3DV4 - SN3836; ConvF(7.33, 7.33, 7.33); Calibrated: 07/07/2016;

Sensor-Surface: 2mm (Mechanical Surface Detection)

Electronics: DAE4 Sn1315; Calibrated: 07/26/2016

Phantom: ELI 4.0; Type: QDOVA001BA;

Measurement SW: DASY52, Version 52.8 (2); SEMCAD X Version 14.6.6 (6824)

System Performance Check at 1900MHz/Area Scan (61x111x1): Interpolated grid: dx=1.50 mm, dy=1.50 mm

Maximum value of SAR (interpolated) = 5.56 mW/g

System Performance Check at 1900MHz/Zoom Scan (5x5x7)/Cube 0: Measurement grid: dx=8mm, dy=8mm, dz=5mm

Reference Value = 58.11 V/m; Power Drift = 0.11 dB

Peak SAR (extrapolated) = 10.8 mW/g

SAR(1 g) = 3.99 mW/g; SAR(10 g) = 1.93 mW/g

Maximum value of SAR (measured) = 6.71 mW/g

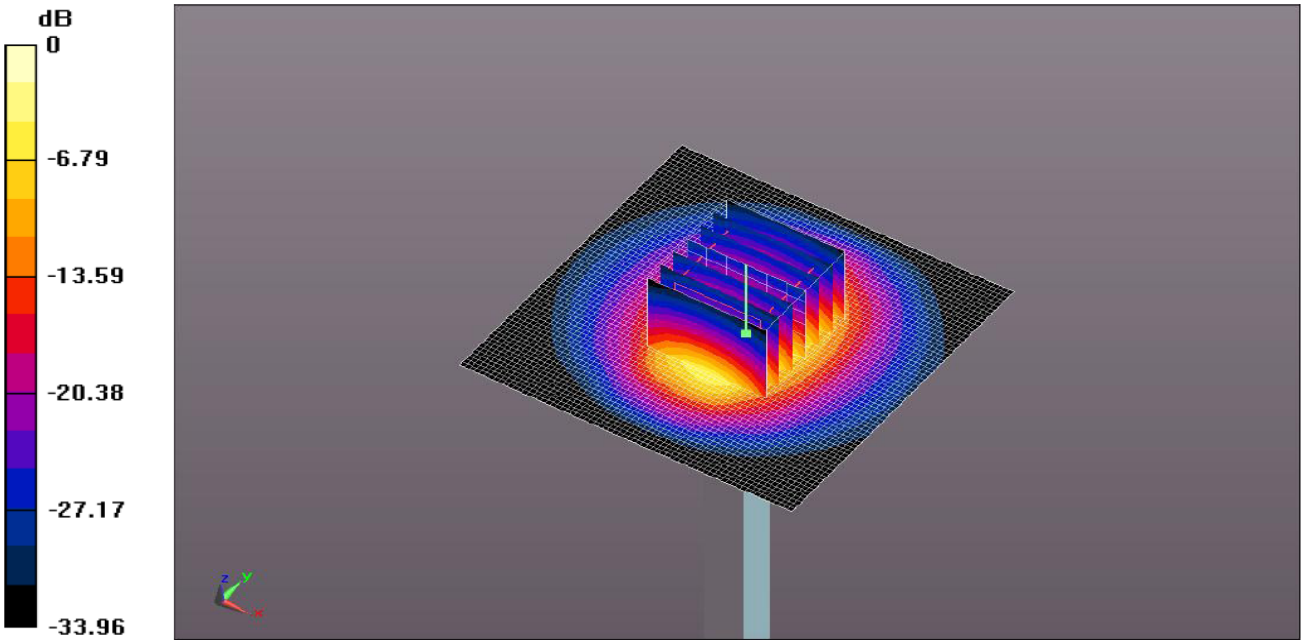

0 dB = 6.71 mW/g = 8.27 dB mW/g

System Performance Check 1900MHz Body 100mW

System Performance Check at 2450 MHz Head TSL

DUT: Dipole 2450 MHz; Type: D2450V2; Serial: 816

Date/Time: 12/20/2016 17:44:28 PM

Communication System: DuiJiangJi; Frequency: 2450 MHz;Duty Cycle: 1:1

Medium parameters used (interpolated): f = 2450 MHz; σ = 1.84 S/m; ε_r = 39.70; ρ = 1000 kg/m^3

Phantom section: Flat Section

DASY5 Configuration:

Probe: EX3DV4 - SN3836; ConvF(7.07, 7.07, 7.07); Calibrated: 07/07/2016;

Sensor-Surface: 2mm (Mechanical Surface Detection)

Electronics: DAE4 Sn1315; Calibrated: 07/26/2016

Phantom: SAM 1; Type: SAM;

Measurement SW: DASY52, Version 52.8 (2); SEMCAD X Version 14.6.6 (6824)

System Performance Check at 2450MHz/Area Scan (81x111x1): Interpolated grid: dx=1.20 mm, dy=1.20 mm

Maximum value of SAR (interpolated) = 6.55 mW/g

System Performance Check at 2450MHz/Zoom Scan (7x7x7)/Cube 0: Measurement grid: dx=5mm, dy=5mm, dz=5mm

Reference Value = 73.48 V/m; Power Drift = -0.08 dB

Peak SAR (extrapolated) = 12.2 mW/g

SAR(1 g) = 5.44 mW/g; SAR(10 g) = 2.91 mW/g

Maximum value of SAR (measured) = 8.02 mW/g

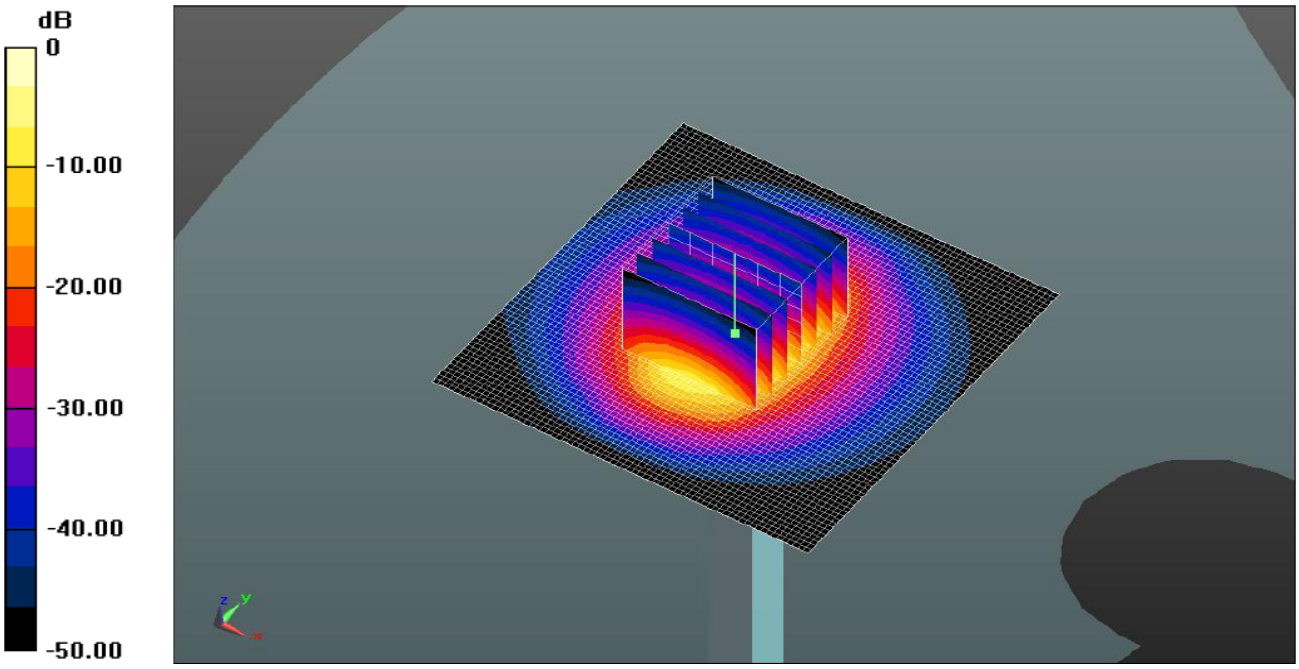

0 dB = 8.02 mW/g = 9.04 dB mW/g

System Performance Check 2450MHz Head 100mW

System Performance Check at 2450 MHz Body TSL

DUT: Dipole 2450 MHz; Type: D2450V2; Serial: 816

Date/Time: 12/18/2016 8:56:11 AM

Communication System: DuiJiangJi; Frequency: 2450 MHz;Duty Cycle: 1:1

Medium parameters used (interpolated): f = 2450 MHz; σ = 1.97 S/m; ε_r = 53.90; ρ = 1000 kg/m^3

Phantom section: Flat Section

DASY5 Configuration:

Probe: EX3DV4 - SN3836; ConvF(7.20, 7.20, 7.20); Calibrated: 07/07/2016;

Sensor-Surface: 2mm (Mechanical Surface Detection)

Electronics: DAE4 Sn1315; Calibrated: 07/26/2016

Phantom: ELI 4.0; Type: QDOVA001BA;

Measurement SW: DASY52, Version 52.8 (2); SEMCAD X Version 14.6.6 (6824)

System Performance Check at 2450MHz/Area Scan (81x111x1): Interpolated grid: dx=1.20 mm, dy=1.20 mm

Maximum value of SAR (interpolated) = 6.29 mW/g

System Performance Check at 2450MHz/Zoom Scan (7x7x7)/Cube 0: Measurement grid: dx=5mm, dy=5mm, dz=5mm

Reference Value = 71.91V/m; Power Drift = 0.06 dB

Peak SAR (extrapolated) = 8.55 mW/g

SAR(1 g) = 5.08 mW/g; SAR(10 g) = 2.83 mW/g

Maximum value of SAR (measured) = 6.10 mW/g

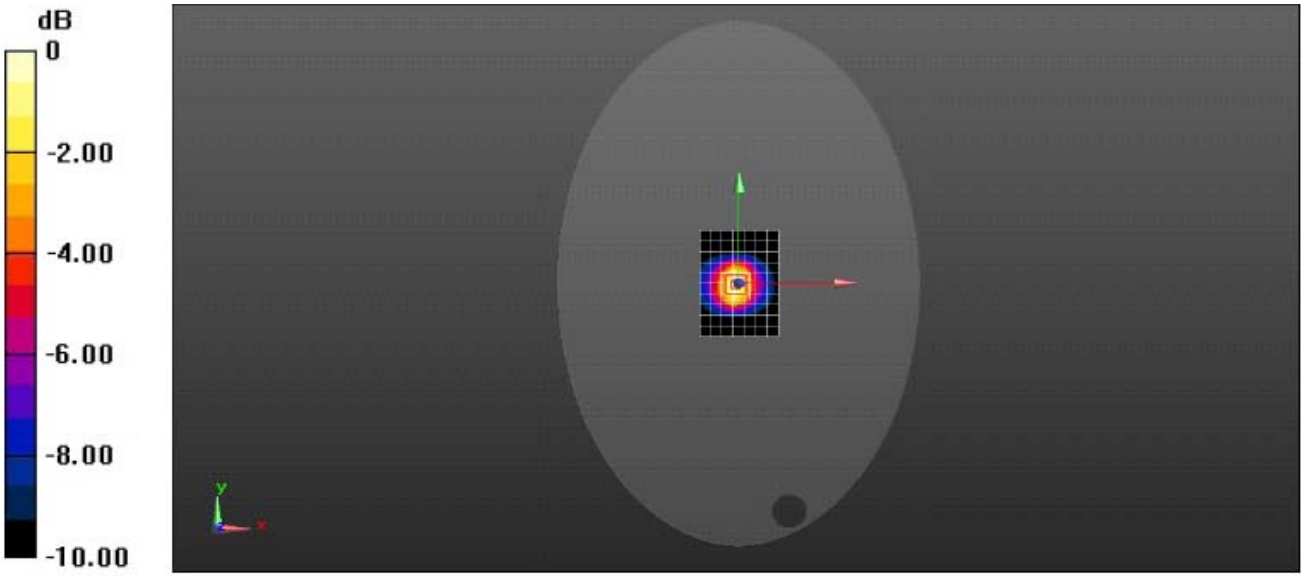

0 dB = 6.10 mW/g = 7.85 dB mW/g

System Performance Check 2450MHz Body 100mW

5.12. SAR Test Graph Results

SAR plots for **the highest measured SAR** in each exposure configuration, wireless mode and frequency band combination according to FCC KDB 865664 D02

Head GSM850, Left Cheek, Low Channel, 824.20 MHz

Communication System: DuiJiangJi; Frequency: 824.20 MHz;Duty Cycle: 1:8

Medium parameters used (interpolated): f = 824 MHz; σ = 0.90 S/m; ε_r =43.30; ρ = 1000 kg/m^3

Phantom section: Flat Section

DASY5 Configuration:

Probe: EX3DV4 - SN3836; ConvF(9.42, 9.42, 9.42); Calibrated: 07/07/2016;

Sensor-Surface: 2mm (Mechanical Surface Detection)

Electronics: DAE4 Sn1315; Calibrated: 07/26/2016

Phantom: SAM 1; Type: SAM;

Measurement SW: DASY52, Version 52.8 (2); SEMCAD X Version 14.6.6 (6824)

Left Check 824.20 MHz/Area Scan (91x141x1): Interpolated grid: dx=1.50 mm, dy=1.50 mm

Maximum value of SAR (interpolated) = 0.202 mW/g

Left Check 824.20 MHz /Zoom Scan (5x5x7)/Cube 0: Measurement grid: dx=8mm, dy=8mm, dz=5mm

Reference Value = 10.552 V/m; Power Drift = 0.02 dB

Peak SAR (extrapolated) = 0.426 mW/g

SAR(1 g) = 0.188 mW/g; SAR(10 g) = 0.102 mW/g

Maximum value of SAR (measured) = 0.212 mW/g

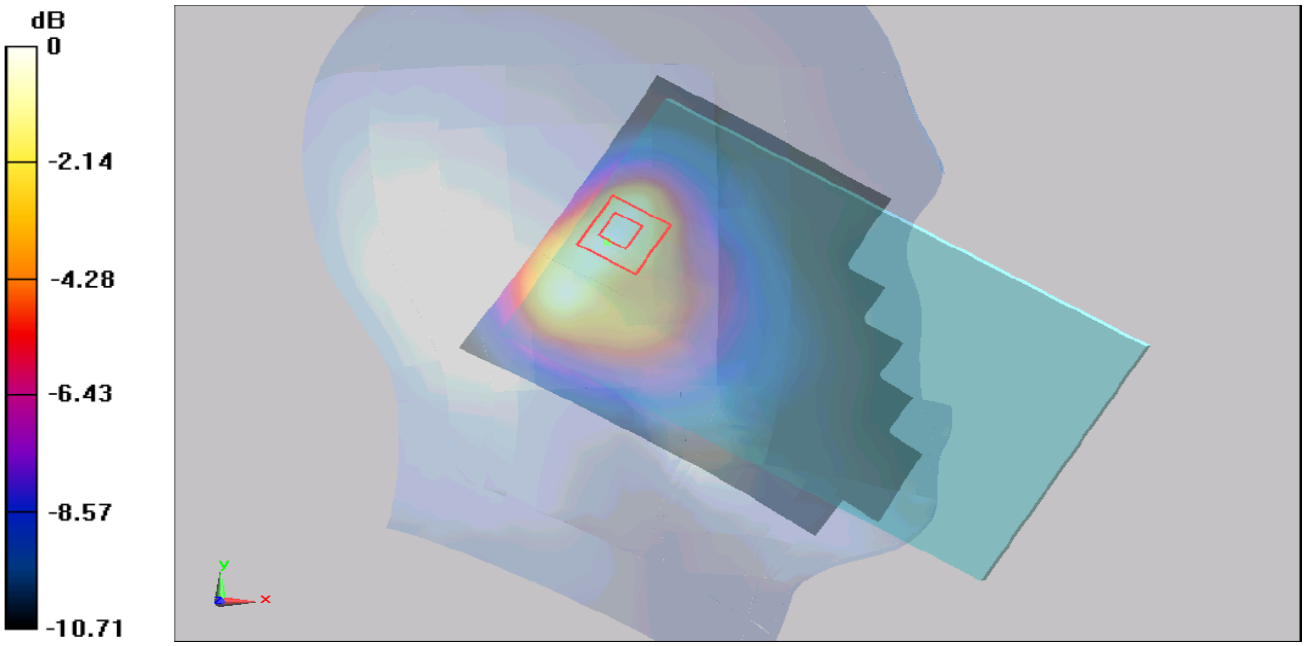

0 dB = 0.212 mW/g = -6.74 dB mW/g

Date/Time: 12/20/2016 10:15:34 AM

Figure 1: Head GSM850, Left Check, Low Channel, 824.20 MHz

Body- Worn GSM850, Test Position 1, GPRS <3TX Slot>, Low Channel, 824.20 MHz

Communication System: DuiJiangJi; Frequency: 824.20 MHz;Duty Cycle: 1:2.67

Medium parameters used (interpolated): f = 835 MHz; σ = 0.94 S/m; ε_r = 57.20; ρ = 1000 kg/m^3

Phantom section: Flat Section

DASY5 Configuration:

Probe: EX3DV4 - SN3836; ConvF(9.25, 9.25, 9.25); Calibrated: 07/07/2016;

Sensor-Surface: 2mm (Mechanical Surface Detection)

Electronics: DAE4 Sn1315; Calibrated: 07/26/2016

Phantom: ELI 4.0; Type: QDOVA001BA;

Measurement SW: DASY52, Version 52.8 (2); SEMCAD X Version 14.6.6 (6824)

Test Position 1 824.20 MHz/Area Scan (101x141x1): Interpolated grid: dx=1.50 mm, dy=1.50 mm

Maximum value of SAR (interpolated) = 0.966 mW/g

Test Position 1 824.20 MHz /Zoom Scan (5x5x7)/Cube 0: Measurement grid: dx=8mm, dy=8mm, dz=5mm

Reference Value = 24.748 V/m; Power Drift = 0.06 dB

Peak SAR (extrapolated) = 1.29 mW/g

SAR(1 g) = 0.688 mW/g; SAR(10 g) = 0.395 mW/g

Maximum value of SAR (measured) = 0.986 mW/g

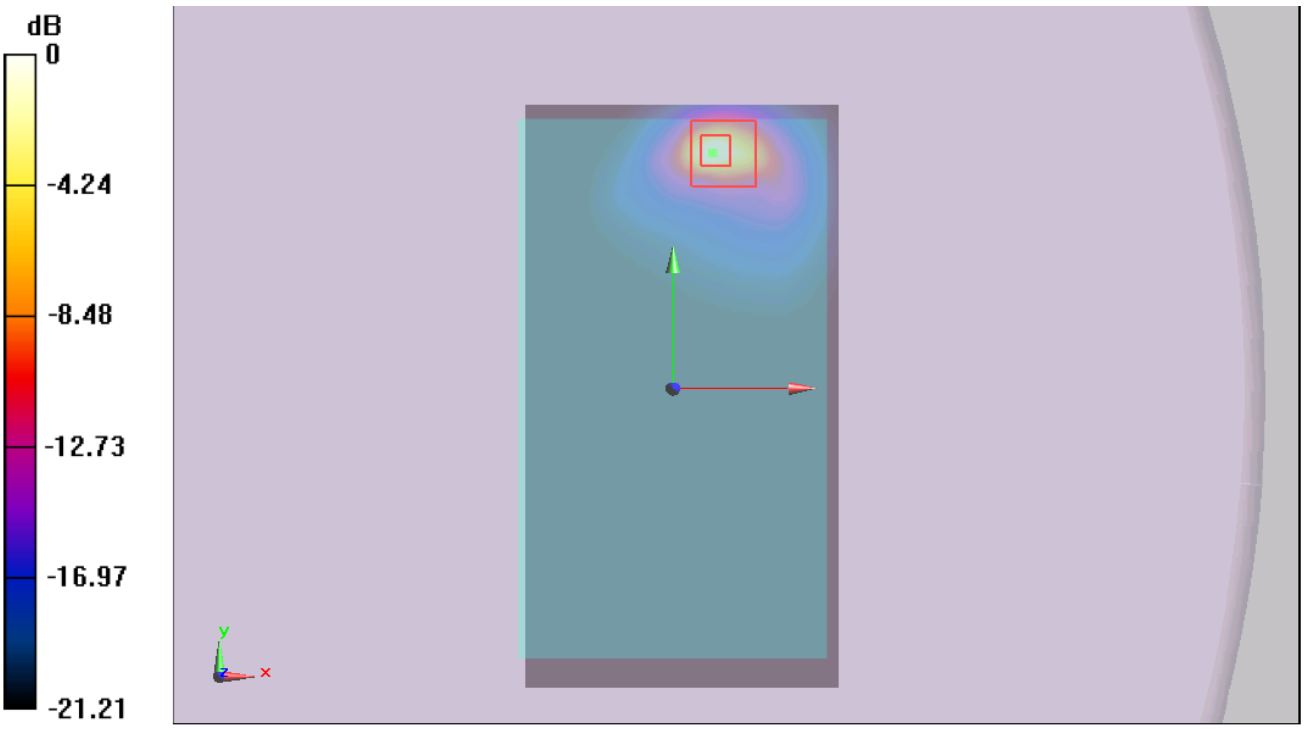

0 dB = 0.986 mW/g = -0.06 dB mW/g

Date/Time: 12/19/2016 09:55:19 AM

Figure 2: Body- Worn GSM850, Test Position 1, GPRS<3TX Slot>, 824.20 MHz

Head GSM1900, Left Cheek, Middle Channel, 1880.0 MHz

Communication System: DuiJiangJi; Frequency: 1880.0 MHz;Duty Cycle: 1:8

Medium parameters used (interpolated): f = 1900 MHz; σ = 1.81 S/m; ε_r =41.30; ρ = 1000 kg/m^3

Phantom section: Flat Section

DASY5 Configuration:

Probe: EX3DV4 - SN3836; ConvF(7.60, 7.60, 7.60); Calibrated: 07/07/2016;

Sensor-Surface: 2mm (Mechanical Surface Detection)

Electronics: DAE4 Sn1315; Calibrated: 07/26/2016

Phantom: SAM 1; Type: SAM;

Measurement SW: DASY52, Version 52.8 (2); SEMCAD X Version 14.6.6 (6824)

Left Check 1880.0 MHz/Area Scan (91x141x1): Interpolated grid: dx=1.50 mm, dy=1.50 mm

Maximum value of SAR (interpolated) = 0.638 mW/g

Left Check 1880.0 MHz /Zoom Scan (5x5x7)/Cube 0: Measurement grid: dx=8mm, dy=8mm, dz=5mm

Reference Value = 13.244 V/m; Power Drift = 0.02 dB

Peak SAR (extrapolated) = 0.632 mW/g

SAR(1 g) = 0.443 mW/g; SAR(10 g) = 0.247 mW/g

Maximum value of SAR (measured) = 0.508 mW/g

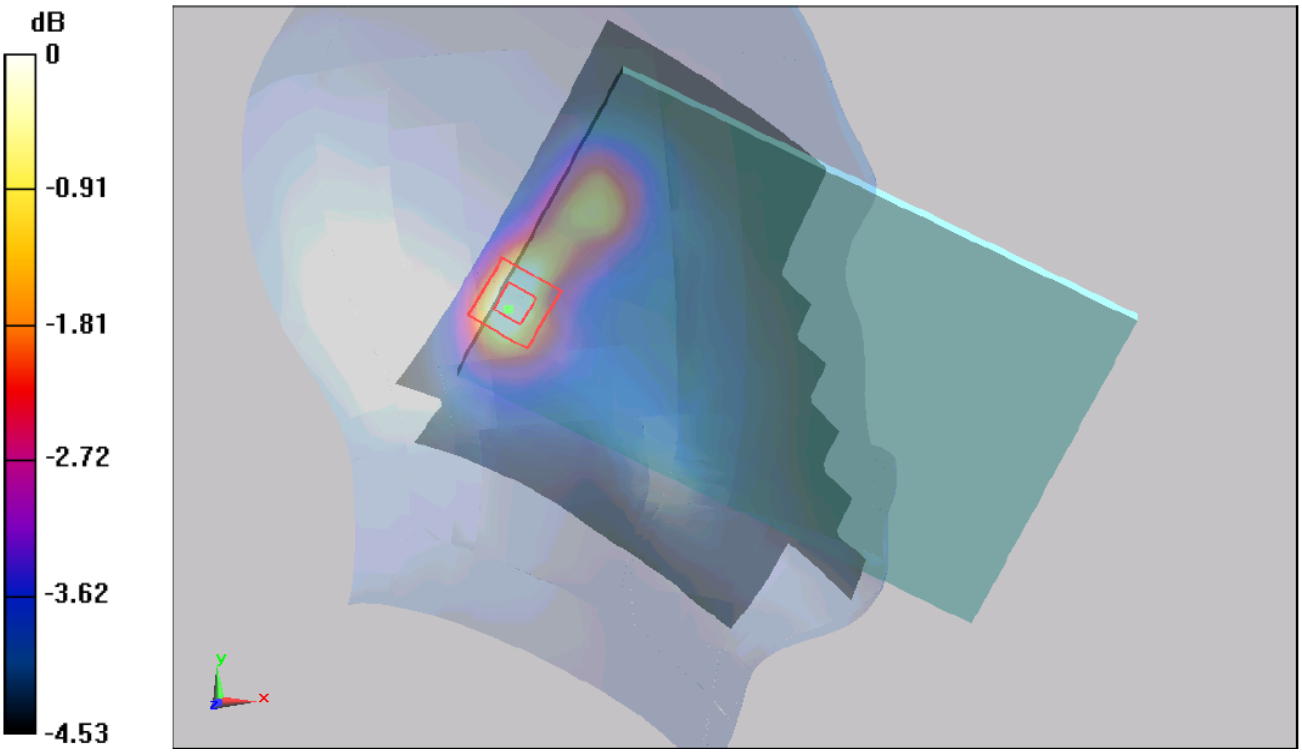

0 dB = 0.508 mW/g = -2.94 dB mW/g

Date/Time: 12/20/2016 14:42:17 PM

Figure 3: Head GSM1900, Left Check, Middle Channel, 1880.0 MHz

Body- Worn GSM1900, Test Position 1, GPRS <3TX Slot>, MiddleChannel, 1880.0 MHz

Communication System: DuiJiangJi; Frequency: 1880.0 MHz;Duty Cycle: 1:2.67

Medium parameters used (interpolated): f = 1880 MHz; σ = 0.94 S/m; ε_r = 57.20; ρ = 1000 kg/m^3

Phantom section: Flat Section

DASY5 Configuration:

Probe: EX3DV4 - SN3836; ConvF(7.33, 7.33, 7.33); Calibrated: 07/07/2016;

Sensor-Surface: 2mm (Mechanical Surface Detection)

Electronics: DAE4 Sn1315; Calibrated: 07/26/2016

Phantom: ELI 4.0; Type: QDOVA001BA;

Measurement SW: DASY52, Version 52.8 (2); SEMCAD X Version 14.6.6 (6824)

Test Position 1 1880.0 MHz/Area Scan (101x141x1): Interpolated grid: dx=1.50 mm, dy=1.50 mm

Maximum value of SAR (interpolated) = 0.922 mW/g

Test Position 1 1880.0 MHz /Zoom Scan (5x5x7)/Cube 0: Measurement grid: dx=8mm, dy=8mm, dz=5mm

Reference Value = 20.989 V/m; Power Drift = -0.03 dB

Peak SAR (extrapolated) = 1.82 mW/g

SAR(1 g) = 0.828 mW/g; SAR(10 g) = 0.442 mW/g

Maximum value of SAR (measured) = 1.06 mW/g

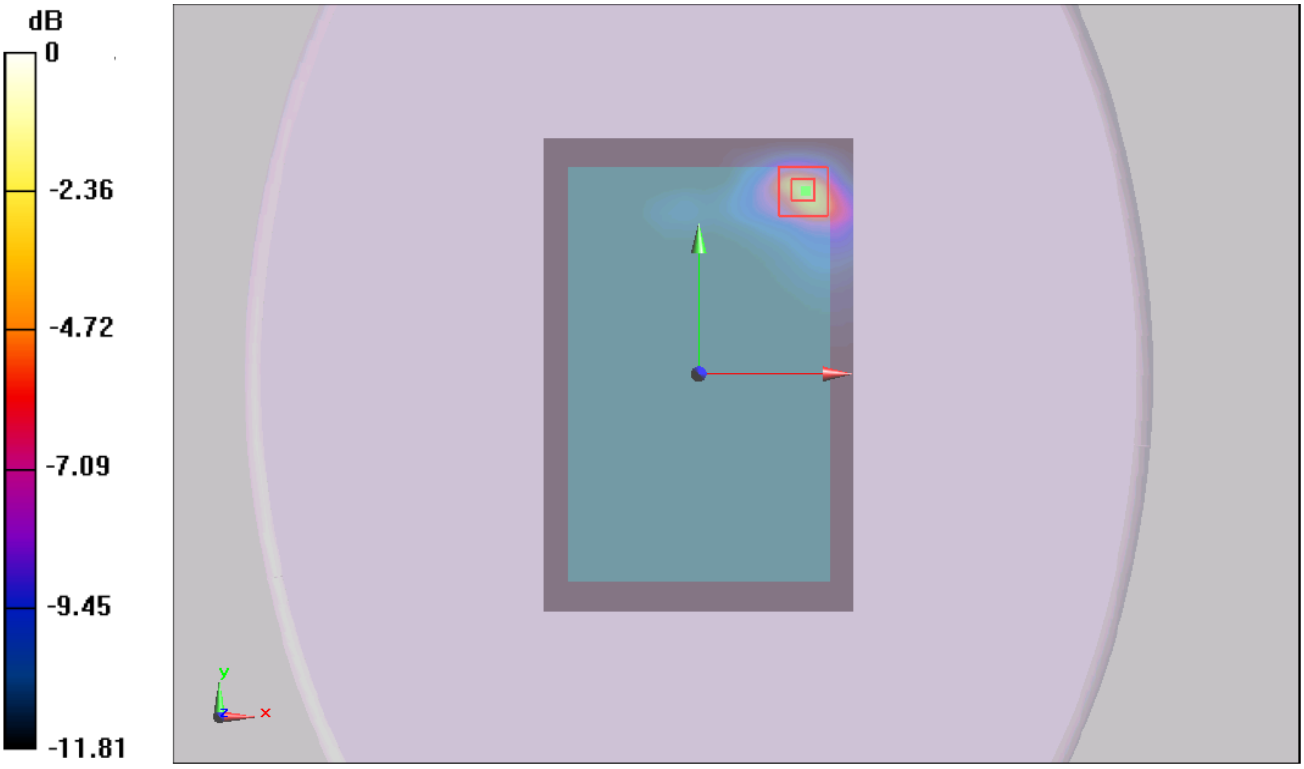

0 dB = 1.06 mW/g = 0.25 dB mW/g

Date/Time: 12/19/2016 15:37:22 PM

Figure 4: Body- Worn GSM1900, Test Position 1, GPRS<3TX Slot>, 1880.0 MHz

Head 2.4GWLAN, Left Check, IEEE 802.11b, 2462 MHz

Communication System: DuiJiangJi; Frequency: 2462 MHz;Duty Cycle: 1:1

Medium parameters used (interpolated): f = 2462 MHz; σ = 1.85 S/m; ε_r = 40.10; ρ = 1000 kg/m^3

Phantom section: Flat Section

DASY5 Configuration:

Probe: EX3DV4 - SN3836; ConvF(7.07, 7.07, 7.07); Calibrated: 07/07/2016;

Sensor-Surface: 2mm (Mechanical Surface Detection)

Electronics: DAE4 Sn1315; Calibrated: 07/26/2016

Phantom: SAM 1; Type: SAM;

Measurement SW: DASY52, Version 52.8 (2); SEMCAD X Version 14.6.6 (6824)

Left Check 2462 MHz / Area Scan (91x141x1): Interpolated grid: dx=1.50 mm, dy=1.50 mm

Maximum value of SAR (interpolated) = 0.246 mW/g

Left Check 2462 MHz / Zoom Scan (7x7x7)/Cube 0: Measurement grid: dx=5mm, dy=5mm, dz=5mm

Reference Value = 9.144 V/m; Power Drift = -0.04 dB

Peak SAR (extrapolated) = 0.783 mW/g

SAR(1 g) = 0.191 mW/g; SAR(10 g) = 0.099 mW/g

Maximum value of SAR (measured) = 0.312 mW/g

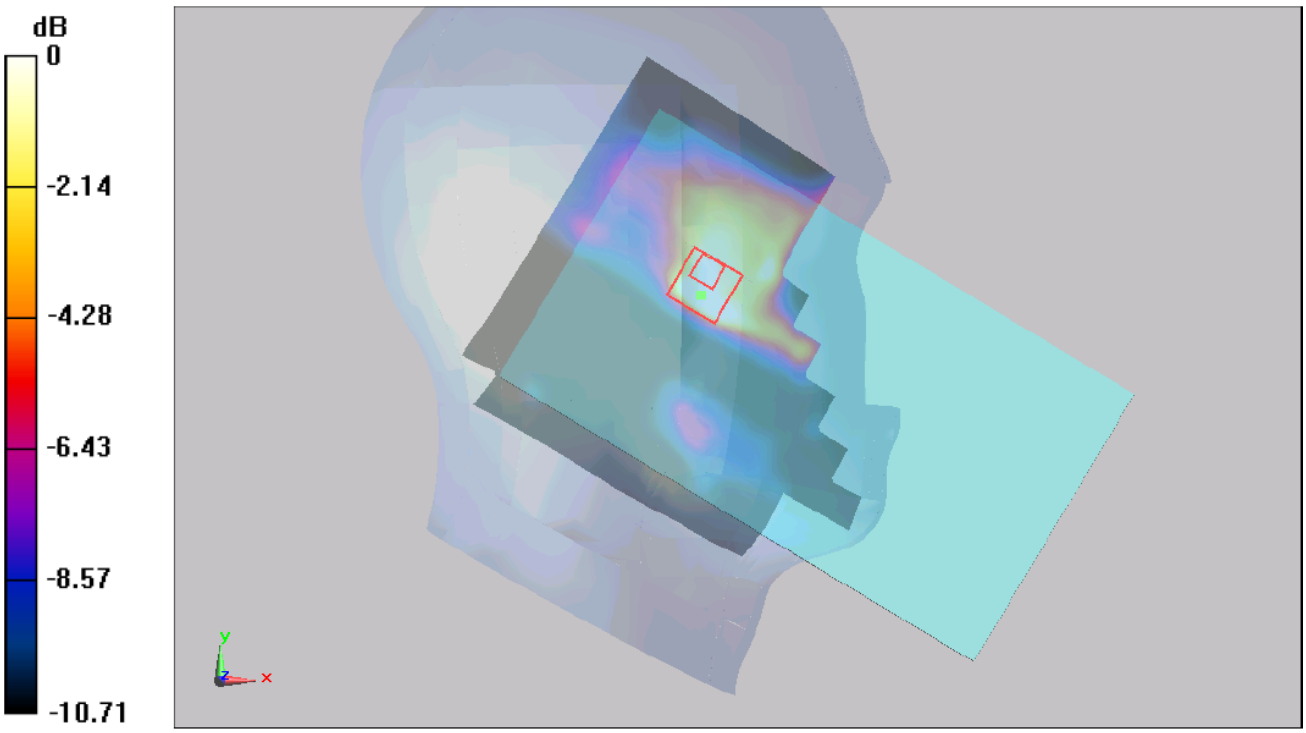

0 dB = 0.312 mW/g = -5.06 dB mW/g

Date/Time: 12/20/2016 18:56:07 PM

Figure 5: Head 2.4GWLAN, Left Check, IEEE 802.11b, 2462 MHz

Body- Worn 2.4GWLAN, Test Position 1, IEEE 802.11b, 2462 MHz

Communication System: 2.4GWLAN; Frequency: 2462.0 MHz;Duty Cycle:1:1

Medium parameters used (interpolated): f = 2462.0 MHz; σ = 1.97 S/m; ε_r = 54.70; ρ = 1000 kg/m^3

Phantom section: Flat Section

Probe: EX3DV4 - SN3836; ConvF(7.20, 7.20, 7.20); Calibrated: 07/07/2016;

Sensor-Surface: 2mm (Mechanical Surface Detection)

Electronics: DAE4 Sn1315; Calibrated: 07/26/2016

Phantom: ELI 4.0; Type: QDOVA001BA;

Measurement SW: DASY52, Version 52.8 (2); SEMCAD X Version 14.6.6 (6824)

Test Position 1 2462 MHz / Area Scan (91x141x1): Interpolated grid: dx=1.50 mm, dy=1.50 mm

Maximum value of SAR (interpolated) = 0.612 mW/g

Test Position 1 2462 MHz / Zoom Scan (7x7x7)/Cube 0: Measurement grid: dx=5mm, dy=5mm, dz=5mm

Reference Value = 12.662 V/m; Power Drift = 0.01 dB

Peak SAR (extrapolated) = 1.17 mW/g

SAR(1 g) = 0.494 mW/g; SAR(10 g) = 0.225 mW/g

Maximum value of SAR (measured) = 0.58 mW/g

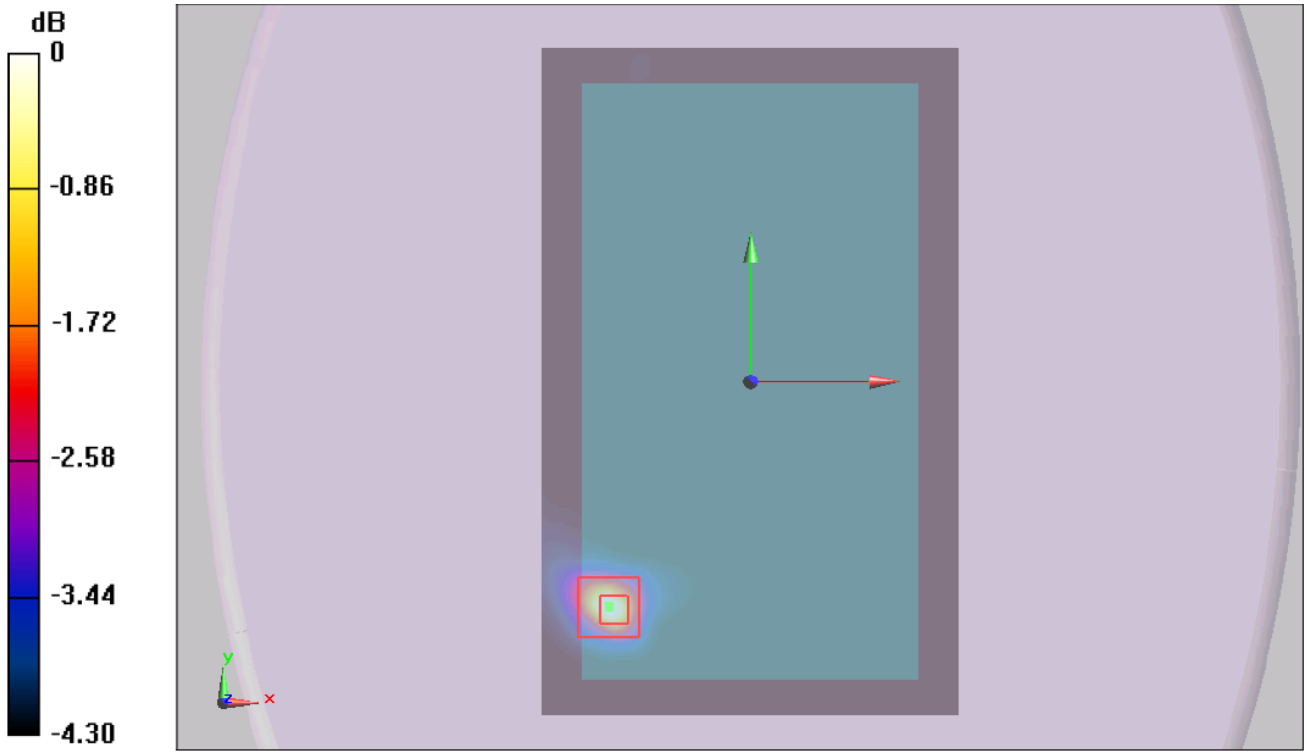

0 dB = 0.58 mW/g = -2.37 dB mW/g

Date/Time: 12/18/2016 12:06:52 PM

Figure 6: Body- Worn 2.4GWLAN, Test Position 1, IEEE 802.11b, 2462 MHz

6. Calibration Certificate

6.1. Probe Calibration Ceriticate

In Collaboration with
s p e a g
CALIBRATION LABORATORY

Add: No.51 Xueyuan Road, Haidian District, Beijing, 100191, China
Tel: +86-10-62304633-2218 Fax: +86-10-62304633-2209
E-mail: cttl@chinattl.com Http://www.chinattl.cn

中国认可
国际互认
校准
CALIBRATION
CNAS L0570

Client Sunway Certificate No: Z16-97101

CALIBRATION CERTIFICATE

Object	EX3DV4 - SN:3836
Calibration Procedure(s)	FD-Z11-2-004-01 Calibration Procedures for Dosimetric E-field Probes
Calibration date:	July 07, 2016

This calibration Certificate documents the traceability to national standards, which realize the physical units of measurements(SI). The measurements and the uncertainties with confidence probability are given on the following pages and are part of the certificate.

All calibrations have been conducted in the closed laboratory facility: environment temperature(22±3)°C and humidity<70%.

Calibration Equipment used (M&TE critical for calibration)

Primary Standards	ID #	Cal Date(Calibrated by, Certificate No.)	Scheduled Calibration
Power Meter NRP2	101919	27-Jun-16 (CTTL, No.J16X04777)	Jun-17
Power sensor NRP-Z91	101547	27-Jun-16 (CTTL, No.J16X04777)	Jun-17
Power sensor NRP-Z91	101548	27-Jun-16 (CTTL, No.J16X04777)	Jun-17
Reference10dBAttenuator	18N50W-10dB	13-Mar-16(CTTL,No.J16X01547)	Mar-18
Reference20dBAttenuator	18N50W-20dB	13-Mar-16(CTTL, No.J16X01548)	Mar-18
Reference Probe EX3DV4	SN 3617	26-Aug-15(SPEAG,No.EX3-3617_Aug15)	Aug-16
DAE4	SN 1331	21-Jan-16(SPEAG, No.DAE4-1331_Jan16)	Jan -17
Secondary Standards	**ID #**	**Cal Date(Calibrated by, Certificate No.)**	**Scheduled Calibration**
SignalGeneratorMG3700A	6201052605	27-Jun-16 (CTTL, No.J16X04776)	Jun-17
Network Analyzer E5071C	MY46110673	26-Jan-16 (CTTL, No.J16X00894)	Jan -17

	Name	Function	Signature
Calibrated by:	Yu Zongying	SAR Test Engineer	
Reviewed by:	Qi Dianyuan	SAR Project Leader	
Approved by:	Lu Bingsong	Deputy Director of the laboratory	

Issued: July 08, 2016

This calibration certificate shall not be reproduced except in full without written approval of the laboratory.

In Collaboration with
s p e a g
CALIBRATION LABORATORY
Add: No.51 Xueyuan Road, Haidian District, Beijing, 100191, China
Tel: +86-10-62304633-2218 Fax: +86-10-62304633-2209
E-mail: cttl@chinattl.com Http://www.chinattl.cn

Glossary:

TSL	tissue simulating liquid
NORMx,y,z	sensitivity in free space
ConvF	sensitivity in TSL / NORMx,y,z
DCP	diode compression point
CF	crest factor (1/duty_cycle) of the RF signal
A,B,C,D	modulation dependent linearization parameters
Polarization Φ	Φ rotation around probe axis
Polarization θ	θ rotation around an axis that is in the plane normal to probe axis (at measurement center), i θ=0 is normal to probe axis
Connector Angle	information used in DASY system to align probe sensor X to the robot coordinate system

Calibration is Performed According to the Following Standards:

a) IEEE Std 1528-2013, "IEEE Recommended Practice for Determining the Peak Spatial-Averaged Specific Absorption Rate (SAR) in the Human Head from Wireless Communications Devices: Measurement Techniques", June 2013

b) IEC 62209-1, "Procedure to measure the Specific Absorption Rate (SAR) for hand-held devices used in close proximity to the ear (frequency range of 300MHz to 3GHz)", February 2005

c) IEC 62209-2, "Procedure to determine the Specific Absorption Rate (SAR) for wireless communication devices used in close proximity to the human body (frequency range of 30 MHz to 6 GHz)", March 2010

d) KDB 865664, "SAR Measurement Requirements for 100 MHz to 6 GHz"

Methods Applied and Interpretation of Parameters:

- *NORMx,y,z:* Assessed for E-field polarization θ=0 (f≤900MHz in TEM-cell; f>1800MHz: waveguide). NORMx,y,z are only intermediate values, i.e., the uncertainties of NORMx,y,z does not effect the E^2-field uncertainty inside TSL (see below ConvF).
- *NORM(f)x,y,z = NORMx,y,z* frequency_response* (see Frequency Response Chart). This linearization is implemented in DASY4 software versions later than 4.2. The uncertainty of the frequency response is included in the stated uncertainty of ConvF.
- *DCPx,y,z:* DCP are numerical linearization parameters assessed based on the data of power sweep (no uncertainty required). DCP does not depend on frequency nor media.
- PAR: PAR is the Peak to Average Ratio that is not calibrated but determined based on the signal characteristics.
- *Ax,y,z; Bx,y,z; Cx,y,z;VRx,y,z:*A,B,C are numerical linearization parameters assessed based on the data of power sweep for specific modulation signal. The parameters do not depend on frequency nor media. VR is the maximum calibration range expressed in RMS voltage across the diode.
- *ConvF and Boundary Effect Parameters:* Assessed in flat phantom using E-field (or Temperature Transfer Standard for f≤800MHz) and inside waveguide using analytical field distributions based on power measurements for f >800MHz. The same setups are used for assessment of the parameters applied for boundary compensation (alpha, depth) of which typical uncertainty valued are given. These parameters are used in DASY4 software to improve probe accuracy close to the boundary. The sensitivity in TSL corresponds to NORMx,y,z* ConvF whereby the uncertainty corresponds to that given for ConvF. A frequency dependent ConvF is used in DASY version 4.4 and higher which allows extending the validity from±50MHz to±100MHz.
- *Spherical isotropy (3D deviation from isotropy):* in a field of low gradients realized using a flat phantom exposed by a patch antenna.
- *Sensor Offset:* The sensor offset corresponds to the offset of virtual measurement center from the probe tip (on probe axis). No tolerance required.
- *Connector Angle:* The angle is assessed using the information gained by determining the *NORMx* (no uncertainty required).

In Collaboration with
s p e a g
CALIBRATION LABORATORY
Add: No.51 Xueyuan Road, Haidian District, Beijing, 100191, China
Tel: +86-10-62304633-2218 Fax: +86-10-62304633-2209
E-mail: cttl@chinattl.com Http://www.chinattl.cn

Probe EX3DV4

SN: 3836

Calibrated: July 07, 2016

Calibrated for DASY/EASY Systems

(Note: non-compatible with DASY2 system!)

In Collaboration with
s p e a g
CALIBRATION LABORATORY
Add: No.51 Xueyuan Road, Haidian District, Beijing, 100191, China
Tel: +86-10-62304633-2218 Fax: +86-10-62304633-2209
E-mail: cttl@chinattl.com Http://www.chinattl.cn

DASY/EASY – Parameters of Probe: EX3DV4 – SN: 3836

Basic Calibration Parameters

	Sensor X	Sensor Y	Sensor Z	Unc (k=2)
Norm(μV/(V/m)^2) [A]	0.40	0.46	0.43	±10.8%
DCP(mV) [B]	93.2	100.2	98.0	

Modulation Calibration Parameters

UID	Communication System Name		A dB	B dB√μV	C	D dB	VR mV	Unc [E] (k=2)
0	CW	X	0.0	0.0	1.0	0.00	167.8	±2.0%
		Y	0.0	0.0	1.0		182.5	
		Z	0.0	0.0	1.0		176.7	

The reported uncertainty of measurement is stated as the standard uncertainty of Measurement multiplied by the coverage factor k=2, which for a normal distribution Corresponds to a coverage probability of approximately 95%.

[A] The uncertainties of Norm X, Y, Z do not affect the E^2-field uncertainty inside TSL (see Page 5 and Page 6).
[B] Numerical linearization parameter: uncertainty not required.
[E] Uncertainly is determined using the max. deviation from linear response applying rectangular distribution and is expressed for the square of the field value.

In Collaboration with
s p e a g
CALIBRATION LABORATORY
Add: No.51 Xueyuan Road, Haidian District, Beijing, 100191, China
Tel: +86-10-62304633-2218 Fax: +86-10-62304633-2209
E-mail: cttl@chinattl.com Http://www.chinattl.cn

DASY/EASY – Parameters of Probe: EX3DV4 – SN: 3836

Calibration Parameter Determined in Head Tissue Simulating Media

f [MHz][C]	Relative Permittivity [F]	Conductivity (S/m) [F]	ConvF X	ConvF Y	ConvF Z	Alpha[G]	Depth[G] (mm)	Unct. (k=2)
750	41.9	0.89	9.43	9.43	9.43	0.30	0.80	±12%
835	41.5	0.90	9.42	9.42	9.42	0.15	1.58	±12%
900	41.5	0.97	9.03	9.03	9.03	0.15	1.46	±12%
1750	40.1	1.37	8.04	8.04	8.04	0.14	1.63	±12%
1900	40.0	1.40	7.60	7.60	7.60	0.16	1.59	±12%
2300	39.5	1.67	7.45	7.45	7.45	0.53	0.68	±12%
2450	39.2	1.80	7.07	7.07	7.07	0.54	0.71	±12%
2600	39.0	1.96	6.96	6.96	6.96	0.61	0.66	±12%
5200	36.0	4.66	5.32	5.32	5.32	0.40	1.42	±13%
5300	35.9	4.76	5.13	5.13	5.13	0.40	1.40	±13%
5500	35.6	4.96	4.85	4.85	4.85	0.40	1.35	±13%
5600	35.5	5.07	4.59	4.59	4.59	0.40	1.45	±13%
5800	35.3	5.27	4.71	4.71	4.71	0.40	1.45	±13%

[C] Frequency validity above 300 MHz of ±100MHz only applies for DASY v4.4 and higher (Page 2), else it is restricted to ±50MHz. The uncertainty is the RSS of ConvF uncertainty at calibration frequency and the uncertainty for the indicated frequency band. Frequency validity below 300 MHz is ± 10, 25, 40, 50 and 70 MHz for ConvF assessments at 30, 64, 128, 150 and 220 MHz respectively. Above 5 GHz frequency validity can be extended to ± 110 MHz.

[F] At frequency below 3 GHz, the validity of tissue parameters (ε and σ) can be relaxed to ±10% if liquid compensation formula is applied to measured SAR values. At frequencies above 3 GHz, the validity of tissue parameters (ε and σ) is restricted to ±5%. The uncertainty is the RSS of the ConvF uncertainty for indicated target tissue parameters.

[G] Alpha/Depth are determined during calibration. SPEAG warrants that the remaining deviation due to the boundary effect after compensation is always less than ± 1% for frequencies below 3 GHz and below ± 2% for the frequencies between 3-6 GHz at any distance larger than half the probe tip diameter from the boundary.

In Collaboration with
s p e a g
CALIBRATION LABORATORY
Add: No.51 Xueyuan Road, Haidian District, Beijing, 100191, China
Tel: +86-10-62304633-2218 Fax: +86-10-62304633-2209
E-mail: cttl@chinattl.com Http://www.chinattl.cn

DASY/EASY – Parameters of Probe: EX3DV4 – SN: 3836

Calibration Parameter Determined in Body Tissue Simulating Media

f [MHz][C]	Relative Permittivity[F]	Conductivity (S/m)[F]	ConvF X	ConvF Y	ConvF Z	Alpha[G]	Depth[G] (mm)	Unct. (k=2)
750	55.5	0.96	9.38	9.38	9.38	0.30	0.85	±12%
835	55.2	0.97	9.25	9.25	9.25	0.17	1.44	±12%
900	55.0	1.05	8.95	8.95	8.95	0.14	1.60	±12%
1750	53.4	1.49	7.64	7.64	7.64	0.17	1.71	±12%
1900	53.3	1.52	7.33	7.33	7.33	0.18	1.80	±12%
2300	52.9	1.81	7.45	7.45	7.45	0.51	0.80	±12%
2450	52.7	1.95	7.20	7.20	7.20	0.62	0.70	±12%
2600	52.5	2.16	6.99	6.99	6.99	0.52	0.79	±12%
5200	49.0	5.30	4.83	4.83	4.83	0.50	1.25	±13%
5300	48.9	5.42	4.60	4.60	4.60	0.50	1.35	±13%
5500	48.6	5.65	4.32	4.32	4.32	0.50	1.35	±13%
5600	48.5	5.77	4.20	4.20	4.20	0.50	1.40	±13%
5800	48.2	6.00	4.30	4.30	4.30	0.50	1.30	±13%

[C] Frequency validity above 300 MHz of ±100MHz only applies for DASY v4.4 and higher (Page 2), else it is restricted to ±50MHz. The uncertainty is the RSS of ConvF uncertainty at calibration frequency and the uncertainty for the indicated frequency band. Frequency validity below 300 MHz is ± 10, 25, 40, 50 and 70 MHz for ConvF assessments at 30, 64, 128, 150 and 220 MHz respectively. Above 5 GHz frequency validity can be extended to ± 110 MHz.

[F] At frequency below 3 GHz, the validity of tissue parameters (ε and σ) can be relaxed to ±10% if liquid compensation formula is applied to measured SAR values. At frequencies above 3 GHz, the validity of tissue parameters (ε and σ) is restricted to ±5%. The uncertainty is the RSS of the ConvF uncertainty for indicated target tissue parameters.

[G] Alpha/Depth are determined during calibration. SPEAG warrants that the remaining deviation due to the boundary effect after compensation is always less than ± 1% for frequencies below 3 GHz and below ± 2% for the frequencies between 3-6 GHz at any distance larger than half the probe tip diameter from the boundary.