FCC Test Report

Report No.: AGC02762230802FR04

FCC ID	:	2AL26-KS4-US
APPLICATION PURPOSE	:	Original Equipment
PRODUCT DESIGNATION	:	Body Worn Camera
BRAND NAME	:	Reveal Media
MODEL NAME	:	KS4
APPLICANT	:	Reveal Media Limited
DATE OF ISSUE	:	Dec. 20, 2023
STANDARD(S)	:	FCC Part 15 Subpart F §15.407
REPORT VERSION	:	V1.0

Attestation of Global Compliance (Shenzhen) Co., Ltd

Any report having not been signed by authorized approver, or having been altered without authorization, or having not been stamped by the "Dedicated Testing/Inspection Stamp" is deemed to be invalid. Copying or excerpting portion of, or altering the content of the report is not permitted without the written authorization of AGC. The test results presented in the report apply only to the tested sample. Any objections to report issued by AGC should be submitted to AGC within 15days after the issuance of the test report. Further enquiry of validity or verification of the test report should be addressed to AGC by agc01@agccert.com.

Report Revise Record

Report Version	Revise Time	Issued Date	Valid Version	Notes
V1.0	/	Dec. 20, 2023	Valid	Initial Release

Any report having not been signed by authorized approver, or having been altered without authorization, or having not been stamped by the "Dedicated Testing/Inspection Stamp" is deemed to be invalid. Copying or excerpting portion of, or altering the content of the report is not permitted without the written authorization of AGC. The test results presented in the report apply only to the tested sample. Any objections to report issued by AGC should be submitted to AGC within 15days after the issuance of the test report. Further enquiry of validity or verification of the test report should be addressed to AGC by agc01@agccert.com.

Table of Contents

1. General Information 4
2. Product Information 5
2.1 Product Technical Description 5
2.2 DFS Band Carrier Frequencies Operation 6
2.3 Related Submittal(S) / Grant (S) 7
2.4 Test Methodology 7
2.5 Description of Test Mode 7
2.6 Summary of Test Result 7
2.7 Antenna Requirement 8
3. Test Environment 9
3.1 Address of The Test Laboratory 9
3.2 Test Facility 9
3.3 Environmental Conditions 10
3.4 List of Equipment Used 10
4. DFS Detection Thresholds and Radar Test Waveforms 11
4.1 Provisions Applicable 11
4.2 DFS Devices Requirements 12
4.3 DFS Detection Threshold Values 13
4.4 Parameters of DFS Test Signals 14
4.5 Measurement Setup (Block Diagram of Configuration) 18
4.6 Measurement Procedure 19
4.7 Radar Waveform Calibration Plot 21
4.8 Measurement Results 22
Appendix I: Photographs of Test Setup 25
Appendix II: Photographs of Test EUT 25

Any report having not been signed by authorized approver, or having been altered without authorization, or having not been stamped by the "Dedicated Testing/Inspection Stamp" is deemed to be invalid. Copying or excerpting portion of, or altering the content of the report is not permitted without the written authorization of AGC. The test results presented in the report apply only to the tested sample. Any objections to report issued by AGC should be submitted to AGC within 15days after the issuance of the test report. Further enquiry of validity or verification of the test report should be addressed to AGC by agc01@agccert.com.

1. General Information

Applicant	Reveal Media Limited
Address	Riverview House, 20 Old Bridge Street, Hampton Wick, KT1 4BU, United Kingdom
Manufacturer	Reveal Media Hong Kong Ltd.
Address	6/F., Luk Kwok Centre, 72 Gloucester Road, Wan Chai, HongKong
Factory	Reveal Media Hong Kong Ltd.
Address	6/F., Luk Kwok Centre, 72 Gloucester Road, Wan Chai, HongKong
Product Designation	Body Worn Camera
Brand Name	Reveal Media
Test Model	KS4
Series Model(s)	N/A
Difference Description	N/A
Date of receipt of test item	Aug. 03, 2023
Date of Test	Aug. 03, 2023~ Dec. 20, 2023
Deviation from Standard	No any deviation from the test method
Condition of Test Sample	Normal
Test Result	Pass
Test Report Form No	AGCER-FCC-DFS-V1

Note: The test results of this report relate only to the tested sample identified in this report.

Prepared By	Bibo Zhang (Project Engineer)	Dec. 20, 2023
Reviewed By	Calvin Liu (Reviewer)	Dec. 20, 2023
Approved By	Max Zhang Authorized Officer	Dec. 20, 2023

Any report having not been signed by authorized approver, or having been altered without authorization, or having not been stamped by the "Dedicated Testing/Inspection Stamp" is deemed to be invalid. Copying or excerpting portion of, or altering the content of the report is not permitted without the written authorization of AGC. The test results presented in the report apply only to the tested sample. Any objections to report issued by AGC should be submitted to AGC within 15days after the issuance of the test report. Further enquiry of validity or verification of the test report should be addressed to AGC by agc01@agccert.com.

2. Product Information

2.1 Product Technical Description

Frequency Range	☒ U-NII 2A:5250MHz~5350MHz ☒ U-NII 2C:5470MHz~5725MHz	
Channel Bandwidth	☐ 20MHz ☐ 40MHz ☐ 80MHz	
Hardware Version	EP-VRM05RFB-02	
Software Version	V1.0	
Operating Mode	☐ Master	
	☐ Client with radar detection	
	☒ Client without radar detection	
TPC Function	☐ With TPC	☒ Without TPC
Weather Band	☒ With 5600~5650MHz	☐ Without 5600~5650MHz
Data transmission technology	TCP technology (Transmission between client and Master)	
Type of Modulation	802.11a/n:(64-QAM, 16-QAM, QPSK, BPSK) OFDM 802.11ac:(256-QAM, 64-QAM, 16-QAM, QPSK, BPSK) OFDM	
Data Rate	802.11a: 6/9/12/18/24/36/48/54Mbps; 802.11n: up to 300Mbps; 802.11ac: up to 866.7Mbps;	
Antenna Designation	PIFA Antenna	
Antenna Gain	1.83dBi	
Power Supply	DC 3.8V 1000mAh by battery	

Any report having not been signed by authorized approver, or having been altered without authorization, or having not been stamped by the "Dedicated Testing/Inspection Stamp" is deemed to be invalid. Copying or excerpting portion of, or altering the content of the report is not permitted without the written authorization of AGC. The test results presented in the report apply only to the tested sample. Any objections to report issued by AGC should be submitted to AGC within 15days after the issuance of the test report. Further enquiry of validity or verification of the test report should be addressed to AGC by agc01@agccert.com.

2.2 DFS Band Carrier Frequencies Operation

There are three bandwidth systems.

For 20MHz bandwidth systems, use Channel 52, 56, 60, 64, 100, 104, 108, 112, 116, 120, 124, 128, 132, 136,140.

For 40MHz bandwidth systems, use Channel 54, 62, 102, 110, 118, 126, 134.

For 80MHz bandwidth systems, use Channel 58, 106, 122.

Frequency Band	Channel No.	Frequency	Channel No.	Frequency
5250~5350 MHz U-NII Band 2A	52	5260 MHz	60	5300 MHz
	54	5270 MHz	62	5310 MHz
	56	5280 MHz	64	5320 MHz
	58	5290 MHz	-	-
5470~5725 MHz U-NII Band 2C	100	5500 MHz	120	5600 MHz
	102	5510 MHz	122	5610 MHz
	104	5520 MHz	124	5620 MHz
	106	5530 MHz	126	5630 MHz
	108	5540 MHz	128	5640 MHz
	110	5550 MHz	132	5660 MHz
	112	5560 MHz	134	5670 MHz
	116	5580 MHz	136	5680 MHz
	118	5590 MHz	140	5700 MHz

Any report having not been signed by authorized approver, or having been altered without authorization, or having not been stamped by the "Dedicated Testing/Inspection Stamp" is deemed to be invalid. Copying or excerpting portion of, or altering the content of the report is not permitted without the written authorization of AGC. The test results presented in the report apply only to the tested sample. Any objections to report issued by AGC should be submitted to AGC within 15days after the issuance of the test report. Further enquiry of validity or verification of the test report should be addressed to AGC by agc01@agccert.com.

2.3 Related Submittal(S) / Grant (S)

This submittal(s) (test report) is intended for FCC ID: **2AL26-KS4-US,** filing to comply with Part 2, Part 15.407 of the Federal Communication Commission rules.

2.4 Test Methodology

The tests were performed according to following standards:

No.	Identity	Document Title
1	FCC 47 CFR Part 15.407(h)	Dynamic Frequency Selection (DFS).
2	KDB 905462	D02 UNII DFS Compliance Procedures New Rules v02

2.5 Description of Test Mode

- The tests in this section are run sequentially and the UUT must pass all tests successfully. If the UUT fails any one of the tests it will count as a failure of compliance.
- To show compliance, all tests must be performed with waveforms randomly generated as specified with test results meeting the required percentage of successful detection criteria.
- One frequency will be chosen from the operating Channels of the UUT within the 5250-5350 MHz or 5470-5725 MHz bands.

2.6 Summary of Test Result

Ref Std.Clause	Description of Test	Result
KDB 905462 7.8.1	DFS: UNII Detection BandwidthMeasurement	N/A
KDB 905462 7.8.2.1	DFS: Initial Channel AvailabilityCheck Time	N/A
KDB 905462 7.8.2.2	DFS: Radar Burst at the Beginning ofthe Channel Availability Check Time	N/A
KDB 905462 7.8.2.3	DFS: Radar Burst at the End of theChannel Availability Check Time	N/A
KDB 905462 7.8.3	DFS: In-Service Monitoring forChannel Move Time (CMT)	Pass
KDB 905462 7.8.3	DFS: In-Service Monitoring for Channel Closing Transmission Time(CCTT)	Pass
KDB 905462 7.8.3	DFS: In-Service Monitoring forNon-Occupancy Period (NOP)	Pass

Note: N/A means not applicable

Any report having not been signed by authorized approver, or having been altered without authorization, or having not been stamped by the "Dedicated Testing/Inspection Stamp" is deemed to be invalid. Copying or excerpting portion of, or altering the content of the report is not permitted without the written authorization of AGC. The test results presented in the report apply only to the tested sample. Any objections to report issued by AGC should be submitted to AGC within 15days after the issuance of the test report. Further enquiry of validity or verification of the test report should be addressed to AGC by agc01@agccert.com.

2.7 Antenna Requirement

Standard Requirement
15.203 requirement: An intentional radiator shall be designed to ensure that no antenna other than that furnished by the responsible party shall be used with the device. The use of a permanently attached antenna or of an antenna that uses a unique coupling to the intentional radiator, the manufacturer may design the unit so that a broken antenna can be replaced by the user, but the use of a standard antenna jack or electrical connector is prohibited.
EUT Antenna:
The non-detachable antenna inside the device cannot be replaced by the user at will. The gain of the antenna is 1.83dBi

Any report having not been signed by authorized approver, or having been altered without authorization, or having not been stamped by the "Dedicated Testing/Inspection Stamp" is deemed to be invalid. Copying or excerpting portion of, or altering the content of the report is not permitted without the written authorization of AGC. The test results presented in the report apply only to the tested sample. Any objections to report issued by AGC should be submitted to AGC within 15days after the issuance of the test report. Further enquiry of validity or verification of the test report should be addressed to AGC by agc01@agccert.com.

3. Test Environment

3.1 Address of The Test Laboratory

Laboratory: Attestation of Global Compliance (Shenzhen) Co., Ltd.

Address: 1-2/F, Building 19, Junfeng Industrial Park, Chongqing Road, Heping Community, Fuhai Street, Bao'an District, Shenzhen, Guangdong, China

3.2 Test Facility

The test facility is recognized, certified, or accredited by the following organizations:

CNAS-Lab Code: L5488

Attestation of Global Compliance (Shenzhen) Co., Ltd. has been assessed and proved to follow CNAS-CL01 Accreditation Criteria for Testing and Calibration Laboratories (identical to ISO/IEC17025: 2017 General Requirements for the Competence of Testing and Calibration Laboratories).

A2LA-Lab Cert. No.: 5054.02

Attestation of Global Compliance (Shenzhen) Co., Ltd. EMC Laboratory has been accredited by A2LA for technical competence in the field of electrical testing, and proved to follow ISO/IEC 17025: 2017 General Requirements for the Competence of Testing and Calibration Laboratories and any additional program requirements in the identified field of testing.

FCC-Registration No.: 975832

Attestation of Global Compliance (Shenzhen) Co., Ltd. EMC Laboratory has been registered and fully described in a report filed with the FCC (Federal Communications Commission). The acceptance letter from the FCC is maintained in our files with Registration 975832.

IC-Registration No.: 24842 (CAB identifier: CN0063)

Attestation of Global Compliance (Shenzhen) Co., Ltd. EMC Laboratory has been registered and fully described in a report filed with the Certification and Engineering Bureau of Industry Canada. The acceptance letter from the IC is maintained in our files with Registration 24842.

Any report having not been signed by authorized approver, or having been altered without authorization, or having not been stamped by the "Dedicated Testing/Inspection Stamp" is deemed to be invalid. Copying or excerpting portion of, or altering the content of the report is not permitted without the written authorization of AGC. The test results presented in the report apply only to the tested sample. Any objections to report issued by AGC should be submitted to AGC within 15days after the issuance of the test report. Further enquiry of validity or verification of the test report should be addressed to AGC by agc01@agccert.com.

3.3 Environmental Conditions

	Normal Conditions
Temperature range (℃)	15 - 35
Relative humidity range	20 % - 75 %
Pressure range (kPa)	86 - 106

3.4 List of Equipment Used

● RF Conducted Test System

Used	Equipment No.	Test Equipment	Manufacturer	Model No.	Serial No.	Last Cal. Date (YY-MM-DD)	Next Cal. Date (YY-MM-DD)
☒	AGC-ER-E061	Spectrum Analyzer	Agilent	N9020A	MY52090123	2023-06-03	2024-06-02
☒	AGC-ER-E059	Signal Generator	Agilent	N5182B	MY53050647	2023-03-03	2024-03-02
☐	AGC-ER-E060	Signal Generator	Agilent	N5171B	MY53050474	2023-06-01	2024-05-31
☒	AGC-ER-A003	Power Splitter	Mini-Circuits	ZFRSC-183-s	3122	2023-06-01	2024-05-31
☐	AGC-ER-A004	Power Splitter	Agilent	11667B	N/A	2023-06-01	2024-05-31
☒	AGC-ER-A005	30dB Attenuator	Mini-Circuits	15542	N/A	Each time	N/A
☐	AGC-ER-A006	10dB Attenuator	Mini-Circuits	15542	N/A	Each time	N/A
☒	AGC-ER-W007	RF Cable	Harbour	SHWCB3000-N	1#	Each time	N/A
☒	AGC-ER-W008	RF Cable	Harbour	SHWCB3000-N	2#	Each time	N/A

● Test Software& Auxiliary Equipment

Used	Equipment No.	Test Equipment	Manufacturer	Model No.	Version Information
☒	AGC-ER-S017	DFS Waveform Generator Software	Keysight	N7607	V2.0.0.0
☒	AGC-ER-S009	DFS Data Analyzer Software	Tonscend	JS1120-3	2.6.77.0518
☒	AGC-EM-A167	WIFI 6E Router (Master)	ASUS	GT-AXE11000	FCC ID: MSQ-RTAXJF00

Any report having not been signed by authorized approver, or having been altered without authorization, or having not been stamped by the "Dedicated Testing/Inspection Stamp" is deemed to be invalid. Copying or excerpting portion of, or altering the content of the report is not permitted without the written authorization of AGC. The test results presented in the report apply only to the tested sample. Any objections to report issued by AGC should be submitted to AGC within 15days after the issuance of the test report. Further enquiry of validity or verification of the test report should be addressed to AGC by agc01@agccert.com.

4. DFS Detection Thresholds and Radar Test Waveforms

4.1 Provisions Applicable

The following table from FCC KDB 905462 D02 UNII DFS Compliance Procedures New Rules v02 lists the applicable requirements for the DFS testing.

Table 3-1: Applicability of DFS Requirements Prior to Use of a Channel

Requirement	Operational Mode		
	☐Master	☒Client without Radar Detection	☐Client with Radar Detection
Non-Occupancy Period	Yes	Not required	Yes
DFS Detection Threshold	Yes	Not required	Yes
Channel Availability Check Time	Yes	Not required	Not required
U-NII Detection Bandwidth	Yes	Not required	Yes

Table 3-2: Applicability of DFS requirements during normal operation

Requirement	Operational Mode	
	☐Master Device or Client with Radar Detection	☒Client with Radar Detection
Non-Occupancy Period	Yes	Not required
DFS Detection Threshold	Yes	Yes
Channel Availability Check Time	Yes	Yes
U-NII Detection Bandwidth	Yes	Not required

Additional requirements for devices with multiple bandwidth modes	☐Master Device or Client with Radar Detection	☒Client Without Radar Detection
U-NII Detection Bandwidth and Statistical Performance Check	All BW modes must be tested	Not required
Channel Move Time and Channel Closing Transmission Time	Test using widest BW mode available	Test using the widest BW mode available for the link
All other tests	Any single BW mode	Not required
Note: Frequencies selected for statistical performance check should include several frequencies within the radar detection bandwidth and frequencies near the edge of the radar detection bandwidth. For 802.11 devices it is suggested to select frequencies in each of the bonded 20 MHz channels and the channel center frequency.		

Any report having not been signed by authorized approver, or having been altered without authorization, or having not been stamped by the "Dedicated Testing/Inspection Stamp" is deemed to be invalid. Copying or excerpting portion of, or altering the content of the report is not permitted without the written authorization of AGC. The test results presented in the report apply only to the tested sample. Any objections to report issued by AGC should be submitted to AGC within 15days after the issuance of the test report. Further enquiry of validity or verification of the test report should be addressed to AGC by agc01@agccert.com.

4.2 DFS Devices Requirements

Per FCC KDB 905462 D02 UNII DFS Compliance Procedures New Rules v02 the following are the requirements for Client Devices:

a) A Client Device will not transmit before having received appropriate control signals from a Master Device.

b) A Client Device will stop all its transmissions whenever instructed by a Master Device to which it is associated and will meet the Channel Move Time and Channel Closing transmission time requirements. The Client Device will not resume any transmissions until it has again received control signals from a Master Device.

c) If a Client Device is performing In-Service Monitoring and detects a Radar Waveform above the DFS Detection Threshold, it will inform the Master Device. This is equivalent to the Master Device detecting the Radar Waveform.

d) Irrespective of Client Device or Master Device detection the Channel Move Time and Channel Closing Transmission Time requirements remain the same.

e) The client test frequency must be monitored to ensure no transmission of any type has occurred for 30 minutes. Note: If the client moves with the master, the device is considered compliant if nothing appears in the client non-occupancy period test. For devices that shut down (rather than moving channels), no beacons should appear.

- **Channel Move Time and Channel Closing Transmission Time requirements are listed in the following table.**

Table 3-3: DFS Response Requirements

Parameter	Value
Non-occupancy period	Minimum 30 minutes
Channel Availability Check Time	60 seconds
Channel Move Time	10 seconds See Note 1.
Channel Closing Transmission Time	200 milliseconds + an aggregate of 60 milliseconds over remaining 10 second period. See Notes 1 and 2.

Note 1: Channel Move Time and the Channel Closing Transmission Time should be performed with Radar Type 0. The measurement timing begins at the end of the Radar Type 0 burst.
Note 2: The Channel Closing Transmission Time is comprised of 200 milliseconds starting at the beginning of the Channel Move Time plus any additional intermittent control signals required to facilitate a Channel move (an aggregate of 60 milliseconds) during the remainder of the 10 second period. The aggregate duration of control signals will not count quiet periods in between transmissions.
Note 3: During the U-NII Detection Bandwidth detection test, radar type 0 should be used. For each frequency step the minimum percentage of detection is 90 percent. Measurements are performed with no data traffic

Any report having not been signed by authorized approver, or having been altered without authorization, or having not been stamped by the "Dedicated Testing/Inspection Stamp" is deemed to be invalid. Copying or excerpting portion of, or altering the content of the report is not permitted without the written authorization of AGC. The test results presented in the report apply only to the tested sample. Any objections to report issued by AGC should be submitted to AGC within 15days after the issuance of the test report. Further enquiry of validity or verification of the test report should be addressed to AGC by agc01@agccert.com.

4.3 DFS Detection Threshold Values

The DFS detection thresholds are defined for Master devices and Client Devices with In-service monitoring. These detection thresholds are listed in the following table.

Table 3-4: Detection Thresholds for Master Devices and Client Devices with Radar Detection

Maximum Transmit Power	Value (See Notes 1, 2, and 3)
EIRP ⩾ 200 milliwatt	-64 dBm
EIRP < 200 milliwatt and power spectral density < 10 dBm/MHz	-62 dBm
EIRP < 200 milliwatt that do not meet the power spectral density requirement	-64 dBm
EIRP ⩾ 200 milliwatt	-64 dBm
Note 1: This is the level at the input of the receiver assuming a 0 dBi receive antenna. Note 2: Throughout these test procedures an additional 1 dB has been added to the amplitude of the test transmission waveforms to account for variations in measurement equipment. This will ensure that the test signal is at or above the detection threshold level to trigger a DFS response. Note3: EIRP is based on the highest antenna gain. For MIMO devices refer to KDB Publication 662911 D01	

Any report having not been signed by authorized approver, or having been altered without authorization, or having not been stamped by the "Dedicated Testing/Inspection Stamp" is deemed to be invalid. Copying or excerpting portion of, or altering the content of the report is not permitted without the written authorization of AGC. The test results presented in the report apply only to the tested sample. Any objections to report issued by AGC should be submitted to AGC within 15days after the issuance of the test report. Further enquiry of validity or verification of the test report should be addressed to AGC by agc01@agccert.com.

4.4 Parameters of DFS Test Signals

This section provides the parameters for required test waveforms, minimum percentage of successful detections, and the minimum number of trials that must be used for determining DFS conformance. Step intervals of 0.1 microsecond for Pulse Width, 1 microsecond for PRI, 1 MHz for chirp width and 1 for the number of pulses will be utilized for the random determination of specific test waveforms.

- **Short Pulse Radar Test Waveforms**

Radar Type	Pulse Width (μsec)	PRI (μsec)	Number of Pulses	Minimum Percentage of Successful Detection	Minimum Number of Trials
0	1	1428	18	See Note 1	See Note 1
1	1	Test A:15unique PRI values randomly selected from the list of 23 PRI values in Table 3-6	$\text{Roundup}\left\{\left(\frac{1}{360}\right)\cdot\left(\frac{19\cdot 10^6}{\text{PRI}_{\mu sec}}\right)\right\}$	60%	30
		Test B: 15 unique PRI values randomly selected within the range of 518-3066μsec, with a minimum increment of 1μsec, excluding PRI values selected in Test A	/		
2	1-5	150-230	23-29	60%	30
3	6-10	200-500	16-18	60%	30
4	11-20	200-500	12-16	60%	30
Aggregate (Radar Types 1-4)				80%	120
Note 1**:** Short Pulse Radar Type 0 should be used for the detection bandwidth test, channel move time, and channel closing time tests.					

Table 3-5: Parameters for Short Pulse Radar Waveforms

Any report having not been signed by authorized approver, or having been altered without authorization, or having not been stamped by the "Dedicated Testing/Inspection Stamp" is deemed to be invalid. Copying or excerpting portion of, or altering the content of the report is not permitted without the written authorization of AGC. The test results presented in the report apply only to the tested sample. Any objections to report issued by AGC should be submitted to AGC within 15days after the issuance of the test report. Further enquiry of validity or verification of the test report should be addressed to AGC by agc01@agccert.com.

A minimum of 30 unique waveforms are required for each of the Short Pulse Radar Types 2 through 4. If more than 30 waveforms are used for Short Pulse Radar Types 2 through 4, then each additional waveform must also be unique and not repeated from the previous waveforms.

Pulse Repetition Frequency Number	Pulse Repetition Frequency (Pulses Per Second)	Pulse Repetition Interval (Microseconds)
1	1930.5	518
2	1858.7	538
3	1792.1	558
4	1730.1	578
5	1672.2	598
6	1618.1	618
7	1567.4	638
8	1519.8	658
9	1474.9	678
10	1432.7	698
11	1392.8	718
12	1355.0	738
13	1319.3	758
14	1285.3	778
15	1253.1	798
16	1222.5	818
17	1193.3	838
18	1165.6	858
19	1139.0	878
20	1113.6	898
21	1089.3	918
22	1066.1	938
23	326.2	3066

Table 3-6: Pulse Repetition Intervals Values for Test A

Any report having not been signed by authorized approver, or having been altered without authorization, or having not been stamped by the "Dedicated Testing/Inspection Stamp" is deemed to be invalid. Copying or excerpting portion of, or altering the content of the report is not permitted without the written authorization of AGC. The test results presented in the report apply only to the tested sample. Any objections to report issued by AGC should be submitted to AGC within 15days after the issuance of the test report. Further enquiry of validity or verification of the test report should be addressed to AGC by agc01@agccert.com.

- **Long Pulse Radar Test Waveform**

Radar Type	Pulse Width (μsec)	Chirp Width (MHz)	PRI (μsec)	Number of Pulses per Burst	Number of Bursts	Minimum Percentage of Successful Detection	Minimum Number of Trials
5	50-100	5-20	1000-2000	1-3	8 - 20	80%	30

Table 3-7: Parameters for Long Pulse Radar Waveforms

The parameters for this waveform are randomly chosen. Thirty unique waveforms are required for the Long Pulse Radar Type waveforms. If more than 30 waveforms are used for the Long Pulse Radar Type waveforms, then each additional waveform must also be unique and not repeated from the previous waveforms.

- **Frequency Hopping Radar Test Waveform**

Radar Type	Pulse Width (μsec)	Chirp Width (MHz)	PRI (μsec)	Number of Pulses per Burst	Number of Bursts	Minimum Percentage of Successful Detection	Minimum Number of Trials
6	1	333	9	0.333	300	70%	30

Table 3-7: Parameters for Long Pulse Radar Waveforms

For the Frequency Hopping Radar Type, the same Burst parameters are used for each waveform. The hopping sequence is different for each waveform and a 100-length segment is selected from the hopping sequence defined by the following algorithm:

The first frequency in a hopping sequence is selected randomly from the group of 475 integer frequencies from 5250 – 5724MHz. Next, the frequency that was just chosen is removed from the group and a frequency is randomly selected from the remaining 474 frequencies in the group. This process continues until all 475 frequencies are chosen for the set. For selection of a random frequency, the frequencies remaining within the group are always treated as equally likely

Any report having not been signed by authorized approver, or having been altered without authorization, or having not been stamped by the "Dedicated Testing/Inspection Stamp" is deemed to be invalid. Copying or excerpting portion of, or altering the content of the report is not permitted without the written authorization of AGC. The test results presented in the report apply only to the tested sample. Any objections to report issued by AGC should be submitted to AGC within 15days after the issuance of the test report. Further enquiry of validity or verification of the test report should be addressed to AGC by agc01@agccert.com.

Radar Type 0

Trial Id	Radar Type	Pulse Width (us)	PRI (us)	Number of Pulses	Waveform Length (us)
0	Type 0	1.0	1428.0	18	25704.0
1	Type 0	1.0	1428.0	18	25704.0
2	Type 0	1.0	1428.0	18	25704.0
3	Type 0	1.0	1428.0	18	25704.0
4	Type 0	1.0	1428.0	18	25704.0
5	Type 0	1.0	1428.0	18	25704.0
6	Type 0	1.0	1428.0	18	25704.0
7	Type 0	1.0	1428.0	18	25704.0
8	Type 0	1.0	1428.0	18	25704.0
9	Type 0	1.0	1428.0	18	25704.0
10	Type 0	1.0	1428.0	18	25704.0
11	Type 0	1.0	1428.0	18	25704.0
12	Type 0	1.0	1428.0	18	25704.0
13	Type 0	1.0	1428.0	18	25704.0
14	Type 0	1.0	1428.0	18	25704.0
15	Type 0	1.0	1428.0	18	25704.0
16	Type 0	1.0	1428.0	18	25704.0
17	Type 0	1.0	1428.0	18	25704.0
18	Type 0	1.0	1428.0	18	25704.0
19	Type 0	1.0	1428.0	18	25704.0
20	Type 0	1.0	1428.0	18	25704.0
21	Type 0	1.0	1428.0	18	25704.0
22	Type 0	1.0	1428.0	18	25704.0
23	Type 0	1.0	1428.0	18	25704.0
24	Type 0	1.0	1428.0	18	25704.0
25	Type 0	1.0	1428.0	18	25704.0
26	Type 0	1.0	1428.0	18	25704.0
27	Type 0	1.0	1428.0	18	25704.0
28	Type 0	1.0	1428.0	18	25704.0
29	Type 0	1.0	1428.0	18	25704.0

Any report having not been signed by authorized approver, or having been altered without authorization, or having not been stamped by the "Dedicated Testing/Inspection Stamp" is deemed to be invalid. Copying or excerpting portion of, or altering the content of the report is not permitted without the written authorization of AGC. The test results presented in the report apply only to the tested sample. Any objections to report issued by AGC should be submitted to AGC within 15days after the issuance of the test report. Further enquiry of validity or verification of the test report should be addressed to AGC by agc01@agccert.com.

4.5 Measurement Setup (Block Diagram of Configuration)

The FCC KDB 905462 D02 UNII DFS Compliance Procedures New Rules v01 describes a radiated test setup and a conducted test setup. The conducted test setup was used for this testing. Figure 3-1 shows the typical test setup.

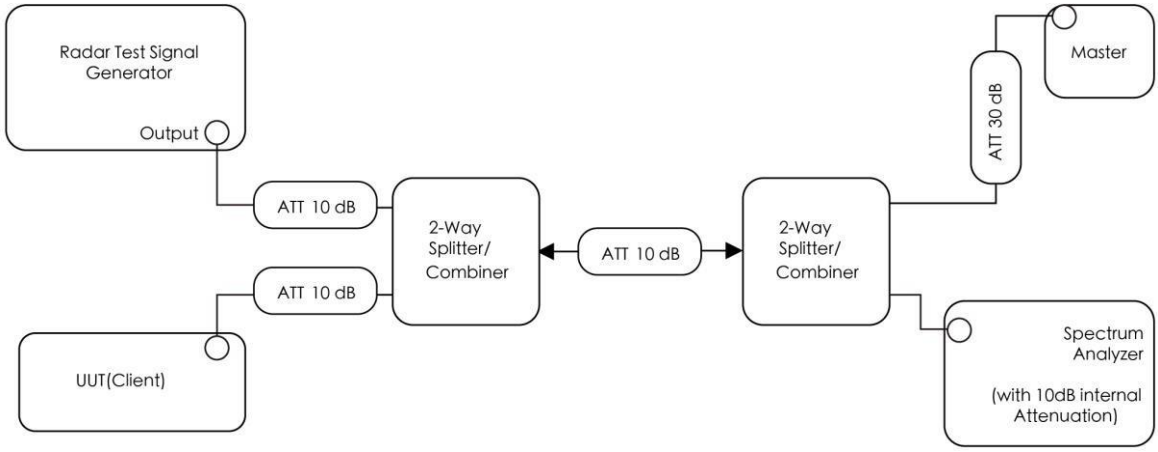

Figure 3-1: Conducted Test Setup where UUT is a Client and Radar Test Waveforms are injected into the Masters

The conducted test setup was used for this calibration testing. Figure 3-2 shows the typical test setup.

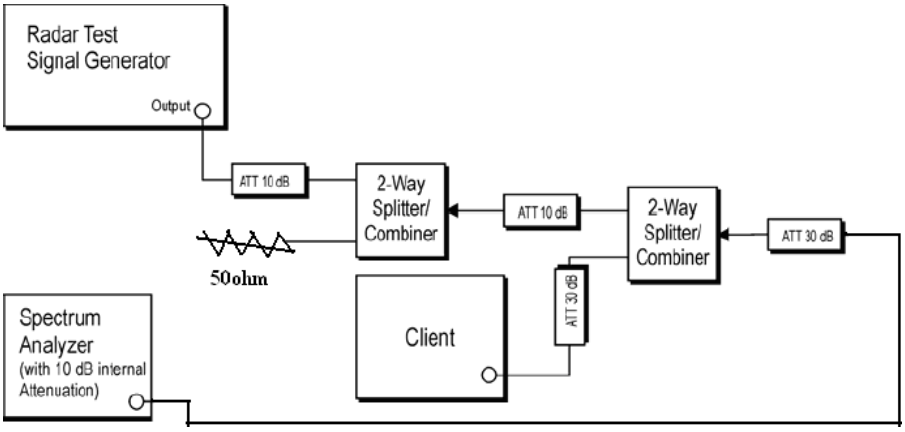

Figure 3-2: Radar Waveform Calibration Conducted Test Setup

Any report having not been signed by authorized approver, or having been altered without authorization, or having not been stamped by the "Dedicated Testing/Inspection Stamp" is deemed to be invalid. Copying or excerpting portion of, or altering the content of the report is not permitted without the written authorization of AGC. The test results presented in the report apply only to the tested sample. Any objections to report issued by AGC should be submitted to AGC within 15days after the issuance of the test report. Further enquiry of validity or verification of the test report should be addressed to AGC by agc01@agccert.com.

4.6 Measurement Procedure

- **Radar Waveform Calibration Measurement**
- The Interference Radar Detection Threshold Level is (-64dBm) + (0) [dBi] + 1 dB= -63 dBm that had been taken into account the output power range and antenna gain.
- The above equipment setup was used to calibrate the conducted Radar Waveform. A vector signal generator was utilized to establish the test signal level for each radar type.
- During this process there were replace 50ohm terminal form Master and Client device and no transmissions by either the Master or Client Device.
- The spectrum analyzer was switched to the zero span (Time Domain) at the frequency of the Radar Waveform generator. Peak detection was used.
- The spectrum analyzer resolution bandwidth (RBW) and video bandwidth (VBW) were set to at least 3MHz. The vector signal generator amplitude was set so that the power level measured at the spectrum analyzer was (-64dBm) + (0) [dBi] + 1 dB= -63dBm.
- Capture the spectrum analyzer plots on short pulse radar types, long pulse radar type and hopping radar waveform.
- **In-Service Monitoring Measurement**
- The test should be performed with Radar Type 0. The measurement timing begins at the end of the Radar Type 0.
- When the radar burst with a level equal to the DFS Detection Threshold + 1dB is generated on the Operating Channel of the U-NII device. A U-NII device operating as a Master Device will associate with the Client Device at Channel. Stream the MPEG test file from the Master Device to the Client Device on the selected Channel for the entire period of the test. At time T0 the Radar Waveform generator sends a Burst of pulses for each of the radar types at Detection Threshold + 1dB.
- Observe the transmissions of the EUT at the end of the radar Burst on the Operating Channel. Measure and record the transmissions from the EUT during the observation time (Channel Move Time).
- Measurement of the aggregate duration of the Channel Closing Transmission Time method. with the spectrum analyzer set to zero span tuned to the center frequency of the EUT operating channel at the radar simulated frequency, peak detection, and max hold, the dwell time per bin is given by: Dwell (1.5ms) = S (12 sec) / B (8000); where Dwell is the dwell time per spectrum analyzer sampling bin, S is the sweep time and B is the number of spectrum analyzer sampling bins. An upper bound of the aggregate duration of the intermittent control signals of Channel Closing Transmission Time is calculated by: 80MHz: C = N X Dwell; where C is the Closing Time, N is the number of spectrum analyzer sampling bins showing a U-NII transmission and Dwell is the dwell time per bin.
- Measure the UUT for more than 30 minutes following the channel close/move time to verify that the UUT does not resume any transmissions on this Channel.

Any report having not been signed by authorized approver, or having been altered without authorization, or having not been stamped by the "Dedicated Testing/Inspection Stamp" is deemed to be invalid. Copying or excerpting portion of, or altering the content of the report is not permitted without the written authorization of AGC. The test results presented in the report apply only to the tested sample. Any objections to report issued by AGC should be submitted to AGC within 15days after the issuance of the test report. Further enquiry of validity or verification of the test report should be addressed to AGC by agc01@agccert.com.

The Following are Specific Test Steps:

a) When a Client Device without Radar Detection is the UUT, the Master Device is the Radar Detection Device.

b) A spectrum analyzer is used to establish the test signal level for each radar type.

c) During this process, there are no transmissions by either the Master Device or Client Device.

d) The spectrum analyzer is switched to the zero span (time domain) mode at the frequency of the Radar Waveform generator. The peak detector function of the spectrum analyzer is utilized. The spectrum analyzer resolution bandwidth (RBW) and video bandwidth (VBW) are set to at least 3 MHz.

e) The measured channels are 5530MHz in 80MHz Bandwidth and 5290MHz in 80MHz Bandwidth. The Radar signal was the same as transmitted channels, and injected into the antenna port of AP (master), measured the DFS parameters.

f) The master transmitted the test data to client, the transmitted duty cycle is 30.8%.

Any report having not been signed by authorized approver, or having been altered without authorization, or having not been stamped by the "Dedicated Testing/Inspection Stamp" is deemed to be invalid. Copying or excerpting portion of, or altering the content of the report is not permitted without the written authorization of AGC. The test results presented in the report apply only to the tested sample. Any objections to report issued by AGC should be submitted to AGC within 15days after the issuance of the test report. Further enquiry of validity or verification of the test report should be addressed to AGC by agc01@agccert.com.

4.7 Radar Waveform Calibration Plot

Test Frequency: 5530 MHz
Radar #0 DFS detection threshold level

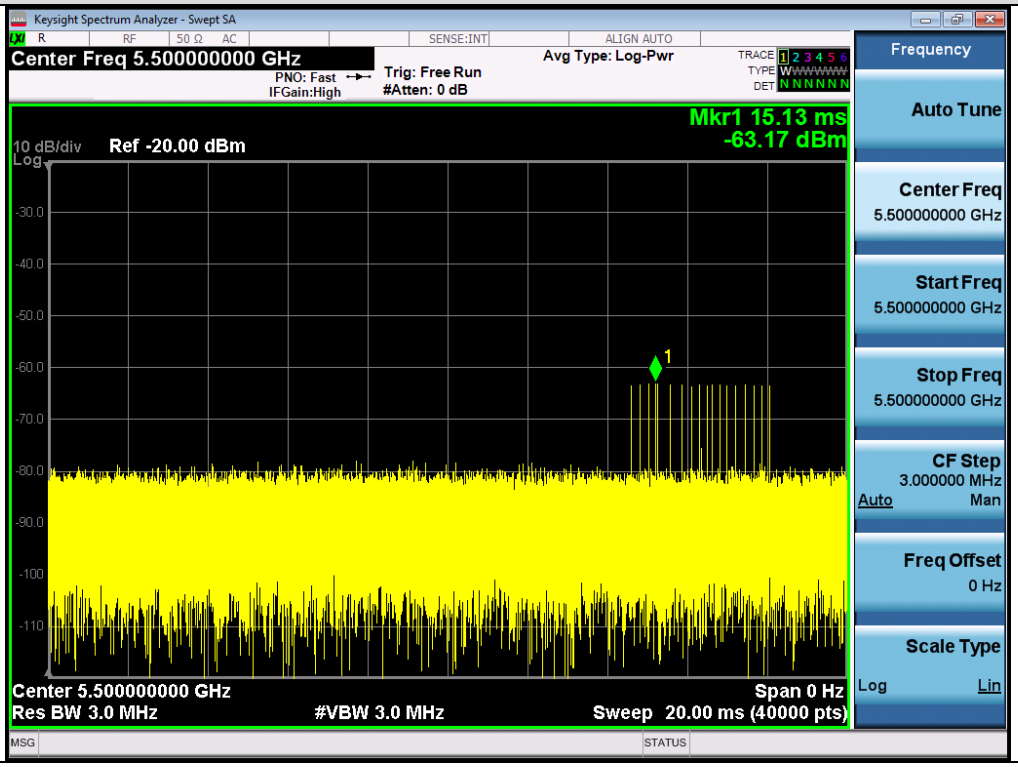

Calibration:

For a detection threshold level of -64dBm and the antenna gain is 1.83dBi, required detection threshold is -62.17dBm (= -64+1.83).

Note: Maximum Transmit Power is greater than 200 milliwatt in this report, so detection threshold level is -64dBm

Any report having not been signed by authorized approver, or having been altered without authorization, or having not been stamped by the "Dedicated Testing/Inspection Stamp" is deemed to be invalid. Copying or excerpting portion of, or altering the content of the report is not permitted without the written authorization of AGC. The test results presented in the report apply only to the tested sample. Any objections to report issued by AGC should be submitted to AGC within 15days after the issuance of the test report. Further enquiry of validity or verification of the test report should be addressed to AGC by agc01@agccert.com.

4.8 Measurement Results

Channel Move Time and Channel Closing Transmission Time

Test Mode	Requirement	Measurement Level	Limit	Result
802.11ac80 (5290MHz)	Channel Closing Transmission Time	0.023	≤0.26s	Pass
	Channel Move Time	1.150	≤10s	Pass
	Non-Occupancy Period (min)	≥ 30min	≥ 30 min	Pass
802.11ac80 (5530MHz)	Channel Closing Transmission Time	0.009	≤0.26s	Pass
	Channel Move Time	1.069	≤10s	Pass
	Non-Occupancy Period (min)	≥ 30min	≥ 30 min	Pass

Any report having not been signed by authorized approver, or having been altered without authorization, or having not been stamped by the "Dedicated Testing/Inspection Stamp" is deemed to be invalid. Copying or excerpting portion of, or altering the content of the report is not permitted without the written authorization of AGC. The test results presented in the report apply only to the tested sample. Any objections to report issued by AGC should be submitted to AGC within 15days after the issuance of the test report. Further enquiry of validity or verification of the test report should be addressed to AGC by agc01@agccert.com.

Modulation Mode	Freq. (MHz)	Radar Type Signal
802.11ac (HE80)	5290 MHz	0
Channel Move Time and Channel Closing Transmission Time		

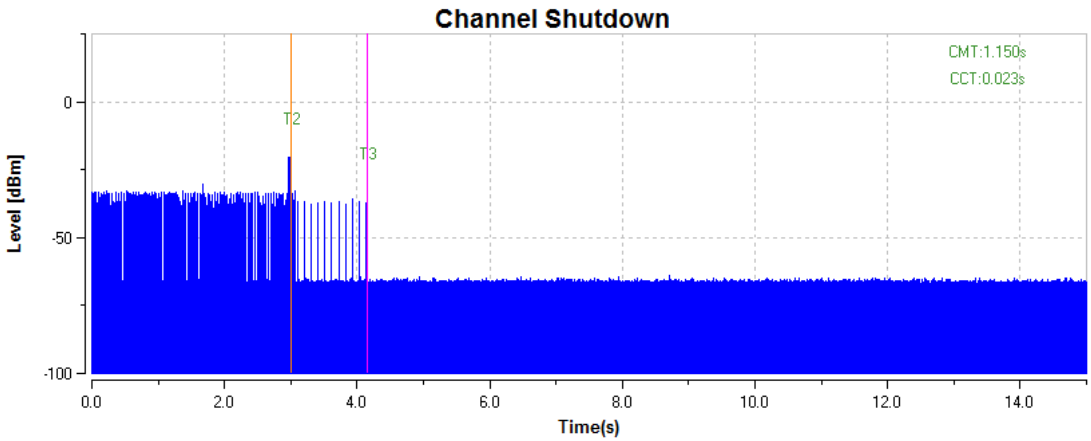

Non-occupancy Period-Elapse time 30minutes

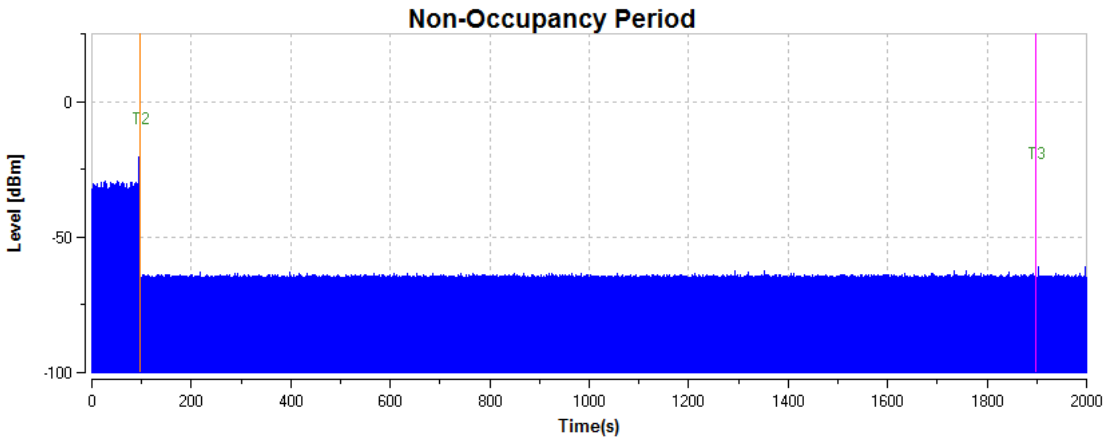

Test Result	Complied

Any report having not been signed by authorized approver, or having been altered without authorization, or having not been stamped by the "Dedicated Testing/Inspection Stamp" is deemed to be invalid. Copying or excerpting portion of, or altering the content of the report is not permitted without the written authorization of AGC. The test results presented in the report apply only to the tested sample. Any objections to report issued by AGC should be submitted to AGC within 15days after the issuance of the test report. Further enquiry of validity or verification of the test report should be addressed to AGC by agc01@agccert.com.

Modulation Mode	Freq. (MHz)	Radar Type Signal
802.11ax (HE80)	5530 MHz	0
Channel Move Time and Channel Closing Transmission Time		

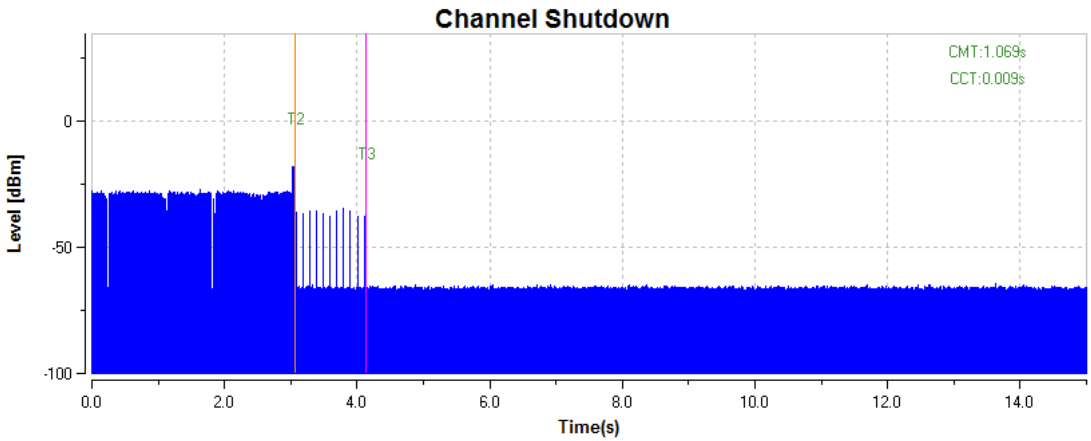

Non-occupancy Period-Elapse time 30minutes

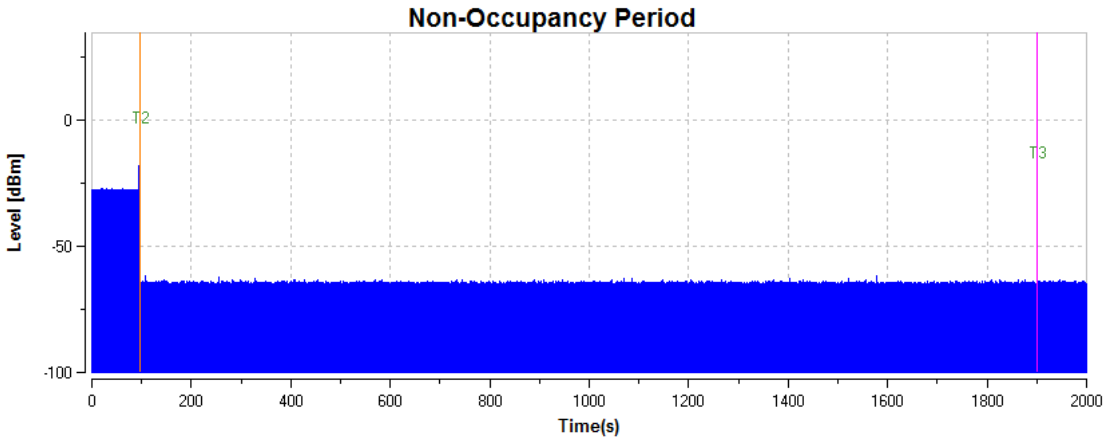

Test Result	Complied

Any report having not been signed by authorized approver, or having been altered without authorization, or having not been stamped by the "Dedicated Testing/Inspection Stamp" is deemed to be invalid. Copying or excerpting portion of, or altering the content of the report is not permitted without the written authorization of AGC. The test results presented in the report apply only to the tested sample. Any objections to report issued by AGC should be submitted to AGC within 15days after the issuance of the test report. Further enquiry of validity or verification of the test report should be addressed to AGC by agc01@agccert.com.

Appendix I: Photographs of Test Setup

Refer to the Report No.: AGC02762230802AP01

Appendix II: Photographs of Test EUT

Refer to the Report No.: AGC02762230802AP04

----End of Report----

Any report having not been signed by authorized approver, or having been altered without authorization, or having not been stamped by the "Dedicated Testing/Inspection Stamp" is deemed to be invalid. Copying or excerpting portion of, or altering the content of the report is not permitted without the written authorization of AGC. The test results presented in the report apply only to the tested sample. Any objections to report issued by AGC should be submitted to AGC within 15days after the issuance of the test report. Further enquiry of validity or verification of the test report should be addressed to AGC by agc01@agccert.com.

Conditions of Issuance of Test Reports

1. All samples and goods are accepted by the Attestation of Global Compliance (Shenzhen) Co., Ltd (the "Company") solely for testing and reporting in accordance with the following terms and conditions. The company provides its services on the basis that such terms and conditions constitute express agreement between the company and any person, firm or company requesting its services (the "Clients").

2. Any report issued by Company as a result of this application for testing services (the "Report") shall be issued in confidence to the Clients and the Report will be strictly treated as such by the Company. It may not be reproduced either in its entirety or in part and it may not be used for advertising or other unauthorized purposes without the written consent of the Company. The Clients to whom the Report is issued may, however, show or send it, or a certified copy thereof prepared by the Company to its customer, supplier or other persons directly concerned. The Company will not, without the consent of the Clients, enter into any discussion or correspondence with any third party concerning the contents of the Report, unless required by the relevant governmental authorities, laws or court orders.

3.The Company shall not be called or be liable to be called to give evidence or testimony on the Report in a court of law without its prior written consent, unless required by the relevant governmental authorities, laws or court orders.

4. In the event of the improper use of the report as determined by the Company, the Company reserves the right to withdraw it, and to adopt any other additional remedies which may be appropriate.

5. Samples submitted for testing are accepted on the understanding that the Report issued cannot form the basis of, or be the instrument for, any legal action against the Company.

6. The Company will not be liable for or accept responsibility for any loss or damage however arising from the use of information contained in any of its Reports or in any communication whatsoever about its said tests or investigations.

7.Clients wishing to use the Report in court proceedings or arbitration shall inform the Company to that effect prior to submitting the sample for testing.

8. The Company is not responsible for recalling the electronic version of the original report when any revision is made to them. The Client assumes the responsibility to providing the revised version to any interested party who uses them.

9. Subject to the variable length of retention time for test data and report stored hereinto as otherwise specifically required by individual accreditation authorities, the Company will only keep the supporting test data and information of the test report for a period of six years. The data and information will be disposed of after the aforementioned retention period has elapsed. Under no circumstances shall we provide any data and information which has been disposed of after retention period. Under no circumstances shall we be liable for damage of any kind, including (but not limited to) compensatory damages, lost profits, lost data, or any form of special, incidental, indirect, consequential or punitive damages of any kind, whether based on breach of contract of warranty, tort (including negligence), product liability or otherwise, even if we are informed in advance of the possibility of such damages.

Any report having not been signed by authorized approver, or having been altered without authorization, or having not been stamped by the "Dedicated Testing/Inspection Stamp" is deemed to be invalid. Copying or excerpting portion of, or altering the content of the report is not permitted without the written authorization of AGC. The test results presented in the report apply only to the tested sample. Any objections to report issued by AGC should be submitted to AGC within 15days after the issuance of the test report. Further enquiry of validity or verification of the test report should be addressed to AGC by agc01@agccert.com.