ESP-C12F

Product Specification

——2.4GHz Wi-Fi and BLE5.0 Combo Module

Version: 1.0 Date: Feb.20, 2023

Features

☐ **General**

- Chip: ESP32-C3
- Module Size:16mm*24mm*3mm
- 4MByte embedded flash (default)
- 384KB ROM
- 400KB SRAM

☐ **Wi-Fi Features**

- IEEE 802.11 b/g/n-compliant
- Center frequency range of operating channel: 2412 ~ 2484 MHz
- Supports 20 MHz, 40 MHz bandwidth in 2.4 GHz band
- 1T1R mode with data rate up to 150 Mbps
- TX/RX A-MPDU, TX/RX A-MSDU
- Immediate Block ACK
- Fragmentation and defragmentation
- Automatic Beacon monitoring (hardware TSF)
- 4 X virtual Wi-Fi interfaces
- Simultaneous support for Infrastructure BSS in Station mode, Soft-AP mode, Station + Soft-AP mode, and promiscuous mode

☐ **Bluetooth Features**

- Bluetooth LE: Bluetooth 5, Bluetooth mesh
- Speed: 125 Kbps, 500 Kbps, 1 Mbps, 2 Mbps
- Advertising extensions
- Multiple advertisement sets
- Channel selection algorithm #2

☐ **Peripheral Interfaces**

- GPIO * 15;
- UART * 2;
- IIC ;
- SPI;
- EN ;
- PWM x 6 ;
- ADC;

■ **Working Temperature:** -40℃-85℃

Applications

- Serial transparent transmission;
- Wi-Fi prober;
- Smart power plug/Smart LED light;
- Mesh networks;
- Sensor networks;
- Over-the-top (OTT) devices;
- Wireless location system beacon;
- Industrial field bus;

Module Type

Name	Antenna Type
ESP-C12F	PCB ANT
ESP-C12F-E	U.FL Ipex

Module Structure

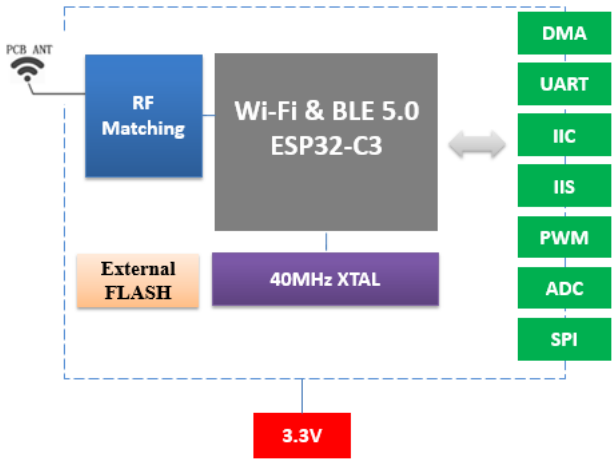

Update Record

Date	Version	Update
2023-02-20	V1.0	First released

Table of Contents

1. Introduction 1

2. Interface Definition 3

3. Size and Layout 5

4. Electronica Characteristics 6

5. Power Consumption 7

6. Wi-Fi RF Characteristics 7

7. Bluetooth LE Radio 9

8. Recommended Sold Temperature Curve 11

9. Minimum User System 11

10. Recommended Layout Design 12

11. Peripheral Design Suggestion 13

12. Product Handling 14

13. U.F.L RF Connector 14

14. Packing Instruction 15

1. Introduction

ESP-C12F Wi-Fi and BLE coexistence Module is a highly integrated single-chip low power 802.11bgn Wireless LAN (WLAN) network controller. It combines a RISC CPU, WLAN MAC, a 1T1R capable WLAN baseband, RF, and Bluetooth in a single chip. It also provides a bunch of configurable GPIO, which are configured as digital peripherals for different applications and control usage.

ESP-C12F Module use ESP32-C3 as Wi-Fi and BLE coexistence SOC chip.

ESP-C12F Module integrates internal memories for complete Wi-Fi protocol functions. The embedded memory configuration also provides convenient application developments.

ESP-C12F module supports the standard IEEE802.11 b/g/n/e/i protocol and the complete TCP/IP protocol stack. User can use it to add the Wi-Fi function for the installed devices, and also can be viewed as an independent network controller. Anyway, ESP-C12F Wi-Fi module provides many probabilities with the best price.

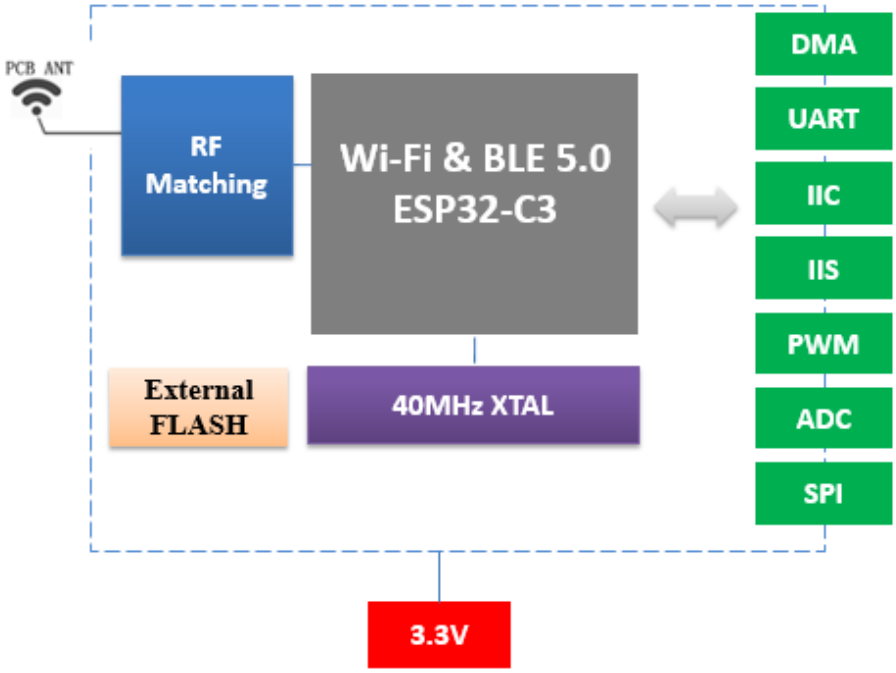

Fig.1.1 ESP-C12F Module Structure

Technical parameters for ESP-C12F are listed as follows.

Table.1.1 ESP-C12F Parameters

Type	Item	Parameter
Hardware	CPU	32-bit RISC CPU
	Interface	UART/SDIO/SPI/I2C/GPIO/PWM
	Working voltage	3.0V ~ 3.6V
	Working temperature	-40℃ ~ 85℃
	Environment temperature	-40°C ~ 1 05°C
	Shape	16mm x 24mm x 3mm
Software	Wi-Fi working mode	STA, Soft-AP and sniffer modes
	Security mode	WPS / WEP / WPA / WPA2 / WPA3
	Update firmware	UART Download
	Software develop	SDK
	Network protocol	IPv4, TCP/UDP/HTTP/FTP/MQTT

Doctors of Intelligence & Technology 严禁复制

2. Interface Definition

ESP-C12F Wi-Fi & BLE module interface definition is shown as below。

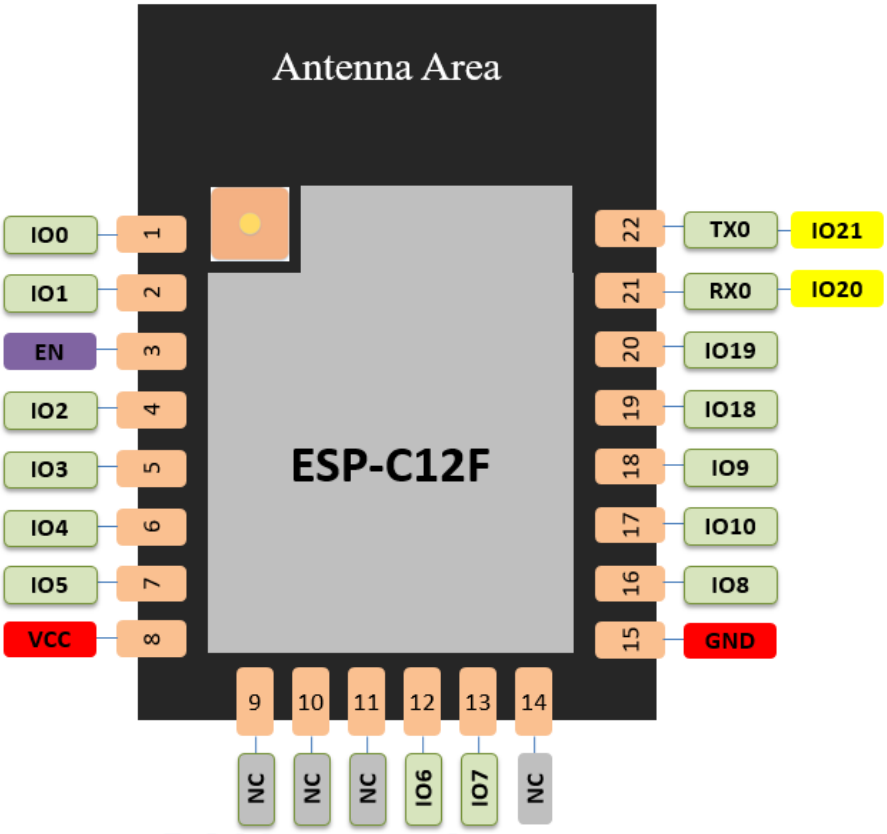

Fig.2.1 ESP-C12F Pins Definition

Working modes and pins function is shown in Table 2.1.

Table.2.1Working Mode

Mode	IO9 Voltage Level
UART Download Mode	LOW
Flash Boot Mode	HIGH (Default)

Table.2.2 Pins Function Definition

Num.	Pin Name	Type	Function
1	IO0	I/O	GPIO0,ADC1_CH1,XTAL_32K_P
2	IO1	I/O	GPIO1,ADC1_CH1, XTAL_32K_N
3	EN	I/O	Chip enable; Internal Pull-up. HIGH: enable the chip
4	IO2	I/O	GPIO2, ADC1_CH2, FSPIQ, Internal Pull-up

5	IO3	I/O	GPIO3, ADC1_CH3
6	IO4	I/O	GPIO4, ADC1_CH4, MTMS, FSPIHD
7	IO5	I/O	GPIO5, ADC2_CH0, MTDI, FSPIWP
8	VCC	P	Power, 3.3V/500mA Recommended
9~11	NC	-	Not Connected
12	IO6	I/O	GPIO6,FSPICLK,MTCK
13	IO7	I/O	GPIO7,FSPID,MTDO
14	NC	-	Not Connected
15	GND	P	Power, 3.3V/500mA Recommended
16	IO8	I/O	GPIO8
17	IO10	I/O	GPIO10, FSPICS0. When the value of eFuse bit EFUSE_JTAG_SEL_ENABLE is 0, JTAG signals cannot be used. 1, if IO10 is 0, JTAG signals come from chip pins; if IO10 is 1, JTAG signals cannot be used
18	IO9	I/O	GPIO9
19	IO18	I/O	GPIO18,USB-D-
20	IO19	I/O	GPIO19,USB-D+
21	RX0	I/O	GPIO20,U0RXD
22	TX0	I/O	GPIO21,U0TXD

Doctors of Intelligence & Technology 严禁复制

3. Size and Layout

Size for ESP-C12F can be shown as follows.

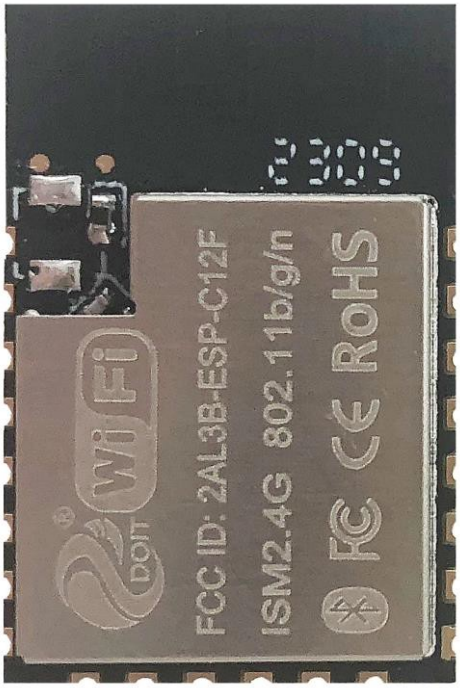

Fig.3.1 Shape for ESP-C12F (-E)

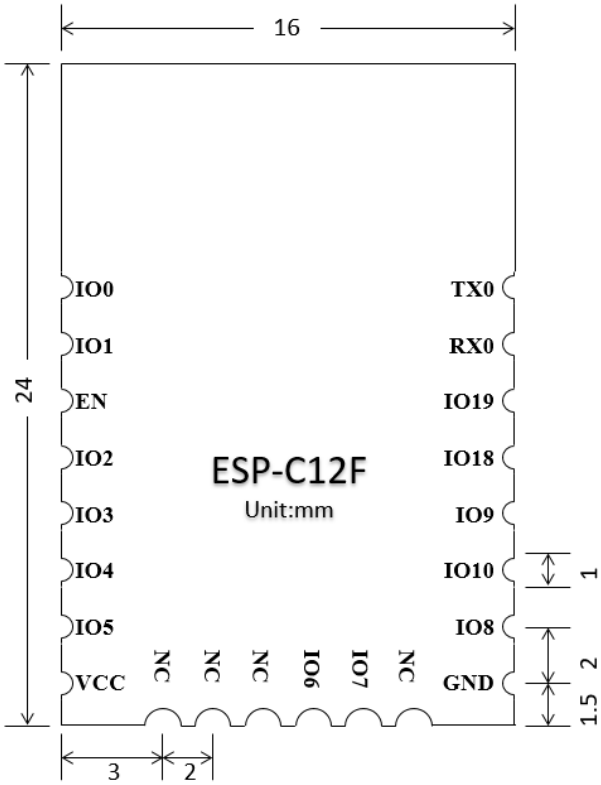

(a) Vertical View

(b) Side View

Fig.3.2 Size for ESP-C12F

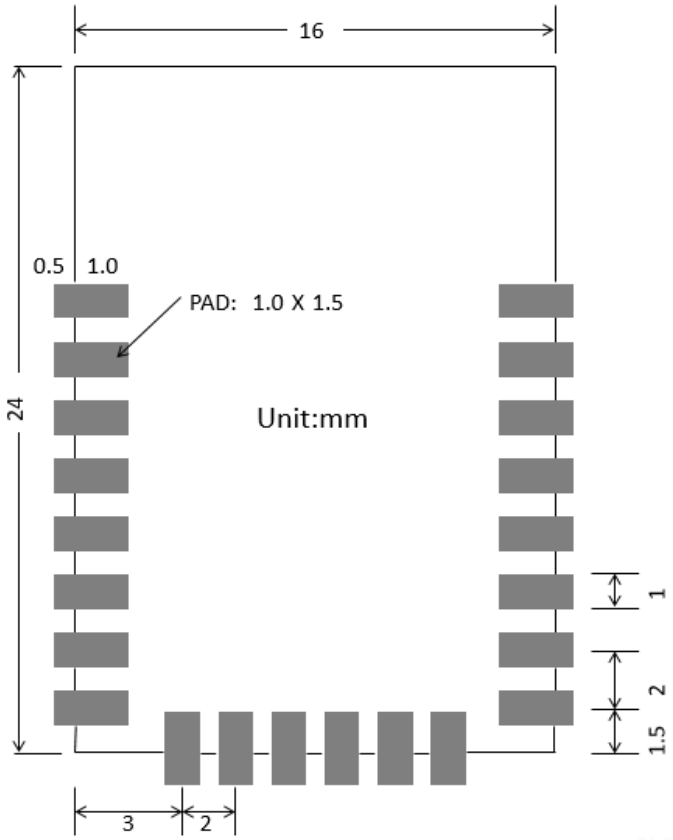

Fig. 3.3 PCB Layout for ESP-C12F

4. Electronica Characteristics

Table.4.1 Electronica Characteristics

Parameter		Condition	Min	Classical	Max	Unit
Store Temperature		-	-40	Normal	150	℃
Sold Temperature		IPC/JEDEC J-STD-020	-	-	260	℃
Working Voltage		-	3.0	3.3	3.6	V
I/O	V_{IL}	-	-0.3	-	0.25*VDD	V
	V_{IH}	-	0.75*VDD	-	VDD+0.3	
	V_{OL}	-	-	-	0.1*VDD	
	V_{OH}	-	0.8*VDD	-	-	
Electrostatic Release Quantity (Human model)		TAMB=25℃	-	-	2	KV

Electrostatic Release Quantity (Machine model)	TAMB=25℃	-	-	0.5	KV

5. Power Consumption

Table.5.1 Power Consumption

Parameter	Min	Classical	Max	Unit
RX 11b /g/n, HT20	-	-	82	mA
RX 11n, HT40		-	84	mA
TX 11b, 1Mbps @21dBm		-	350	mA
TX 11g, 54Mbps @19dBm	-	-	295	mA
TX 11n, HT20, MCS7, @18.5dBm	-	-	290	mA
TX 11n, HT40, MCS7, @18.5dBm	-	-	290	mA
Modem-sleep, CPU is powered on @80MHz	-	15	-	mA
Light-sleep	-	130	-	uA
Deep-sleep, RTC timer + RTC memory	-	5	-	uA
Power off, CHIP_PU is set to low level	-	1	0	uA

The peak current consumption of ESP-C12F exceed 400mA when the module start work (RF calibration work consumes maximum current). Therefore, the recommended power supply is no less than 500mA.

Note:

1. Active Mode: CPU and RF are all turned on.

2. Modem-sleep Mode: CPU is turned on. RF and baseband are turned off, but the communication is still connected.

3. Light-sleep Mode: CPU is turned off. RTC/external interrupt/MAC can wake up the chip. The communication is still connected.

4. Deep-sleep Mode: Only RTC is turned on.

6. Wi-Fi RF Characteristics

The data in the following table is gotten when voltage is 3.3V in the indoor temperature environment.

Table.6.1 Wi-Fi TX Characteristics

Parameter	Min	Classical	Max	Unit
Input frequency	2412	-	2484	MHz
802.11b @1Mbps,11Mbps	-	20.5	-	dBm
802.11g @6Mbps	-	20.0	-	dBm
802.11g @54Mbps	-	18.0	-	dBm
802.11n,HT20 MCS0	-	19.0	-	dBm
802.11n,HT40 MCS0	-	18.5	-	dBm
EVM @11b,1Mbps@20dBm	-	-24.5	-	dBm
EVM @11g,54Mbps@19dBm	-	-28	-	dBm
EVM @11n,MCS7@18.5dBm	-	-30	-	dBm
EVM @11n, HT40, MCS7@18.5dBm	-	-30.5	-	dBm

Table.6.2 Wi-Fi RX Sensitivity

Parameter	Min	Classical	Max	Unit
802.11b,1Mbps	-	-98	-	dBm
802.11b,11Mbps	-	-88	-	dBm
802.11g,6Mbps	-	-92	-	dBm
802.11g,54Mbps	-	-76	-	dBm
802.11n,HT20,MCS0	-	-92	-	dBm
802.11n,HT20,MCS3	-	-85	-	dBm
802.11n,HT20,MCS7	-	-74	-	dBm
802.11n,HT40,MCS0	-	-90	-	dBm
802.11n,HT40,MCS3	-	-81	-	dBm
802.11n,HT40,MCS7	-	-71	-	dBm

Table.6.3 Wi-Fi RX Characteristics

Parameter	Min	Classical	Max	Unit
MAX RX Level @11b,1Mbps	-	5	-	dBm
MAX RX Level @11b,11Mbps	-	5	-	dBm
MAX RX Level @11g,6Mbps	-	5	-	dBm
MAX RX Level @11g,54Mbps	-	0	-	dBm

MAX RX Level @11n,HT20,MCS0	-	5	-	dBm
MAX RX Level @11n,HT20,MCS7	-	0	-	dBm
MAX RX Level @11n,HT40,MCS0	-	5	-	dBm
MAX RX Level @11n,HT40,MCS7	-	0	-	dBm
RX Adjacent Channel Rejection@11b,1Mbps	-	35	-	dB
RX Adjacent Channel Rejection@11b,11Mbps	-	35	-	dB
RX Adjacent Channel Rejection@11g,6Mbps	-	31	-	dB
RX Adjacent Channel Rejection@11g,54Mbps	-	14	-	dB
RX Adjacent Channel Rejection@11n,HT20,MCS0	-	31	-	dB
RX Adjacent Channel Rejection@11n,HT20,MCS7	-	13	-	dB
RX Adjacent Channel Rejection@11n,HT40,MCS0	-	19	-	dB

7. Bluetooth LE Radio

Table.7.1 TX Transmitter General Characteristics

Parameter	Min	Classical	Max	Unit
Gain control power	-	3	-	dBm
RF power control range	-27	-	18	dBm
In-band emissions @F-F0±3MHz, LE 1M	-	-41.95	-	dBm
In-band emissions @F-F0±>3MHz, LE 1M	-	-44.48	-	dBm
Modulation characteristics @ △f1avg, LE 1M	-	245	-	kHz
Modulation characteristics @△f2max, LE 1M	-	208	-	kHz
Carrier frequency offset, LE 1M	-	-9	-	kHz
In-band emissions @F-F0±5MHz, LE 2M	-	-45.26	-	dBm
In-band emissions @F-F0±>5MHz, LE 2M	-	-47	-	dBm
Modulation characteristics @ △f1avg, LE 2M	-	497	-	kHz
Modulation characteristics @△f2max, LE 2M	-	398	-	kHz
Carrier frequency offset, LE 2M	-	-9	-	kHz
In-band emissions @F-F0±3MHz, LE 500K	-	-41.3	-	dBm
In-band emissions @F-F0±>3MHz, LE 500K	-	-42.8	-	dBm
Modulation characteristics @ △f1avg, LE 500K	-	220	-	kHz

Modulation characteristics @△f2max, LE 500K	-	205	-	kHz
Carrier frequency offset, LE 500K	-	-11.9	-	kHz
Maximum received signal @30.8% PER	-	10	-	dBm

Table.7.2 RX Transmitter General Characteristics

Parameter		Min	Classical	Max	Unit
1M	Sensitivity @30.8% PER	-	-96	-	dBm
	Maximum received signal @30.8% PER	-	10	-	dBm
	Co-channel C/I	-	8	-	dB
	Image frequency	-	-29	-	dB
	Adjacent channel to image frequency @F =F_{image}+1	-	-38	-	dB
	Adjacent channel to image frequency @F =F_{image}-1	-	-34	-	dB
	Adjacent channel selectivity @ F =F0+1	-	-4	-	dB
	Adjacent channel selectivity @ F =F0-1	-	-3	-	dB
	Adjacent channel selectivity @ F ≥F0+3	-	-	-	dB
	Adjacent channel selectivity @ F ≤F0-3	-	-39	-	dB
2M	Sensitivity @30.8% PER	-	-93	-	dBm
	Maximum received signal @30.8% PER	-	0	-	dBm
	Co-channel C/I	-	10	-	dB
	Image frequency	-	-27	-	dB
	Adjacent channel to image frequency @F =F_{image}+2	-	-39	-	dB
	Adjacent channel to image frequency @F =F_{image}-2	-	-	-	dB
	Adjacent channel selectivity @ F =F0+2	-	-7	-	dB
	Adjacent channel selectivity @ F =F0-2	-	-7	-	dB
	Adjacent channel selectivity @ F ≥F0+6	-	-39	-	dB
	Adjacent channel selectivity @ F ≤F0-6	-	-39	-	dB
125K	Sensitivity @30.8% PER	-	-104	-	dBm
	Maximum received signal @30.8% PER	-	10	-	dBm
	Co-channel C/I	-	2	-	dB
	Image frequency	-	-34	-	dB
	Adjacent channel to image frequency @F =F_{image}+1	-	-44	-	dB

	Adjacent channel to image frequency @F =F_{image}-1	-	-37	-	dB
	Adjacent channel selectivity @ F =F0+2	-	-40	-	dB
	Adjacent channel selectivity @ F =F0-2	-	-42	-	dB
	Adjacent channel selectivity @ F ≥F0+3	-	-	-	dB
	Adjacent channel selectivity @ F ≤F0-3	-	-46	-	dB

8. Recommended Sold Temperature Curve

(1) Reflow Times <= 2 times (Max.)

(2) Max Rising Slope: 3℃/sec

(3) Max Falling Slope: -3℃/sec

(4) Over 217℃ Time: 60~120sec

(5) PeakTemp:240℃~250℃

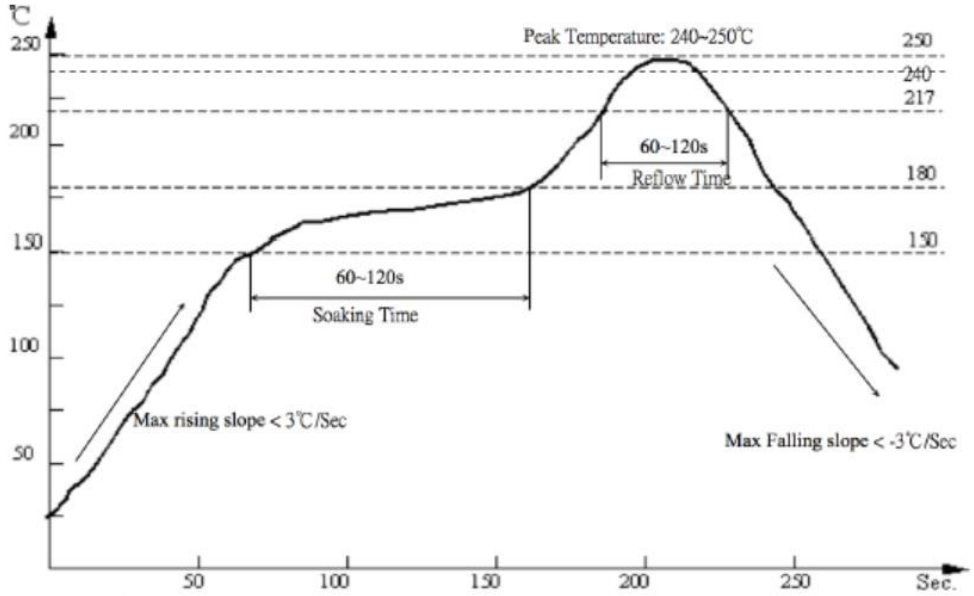

Fig.8.1 Recommended Reflow Profile

9. Minimum User System

This module can work just at 3.3V voltage condition:

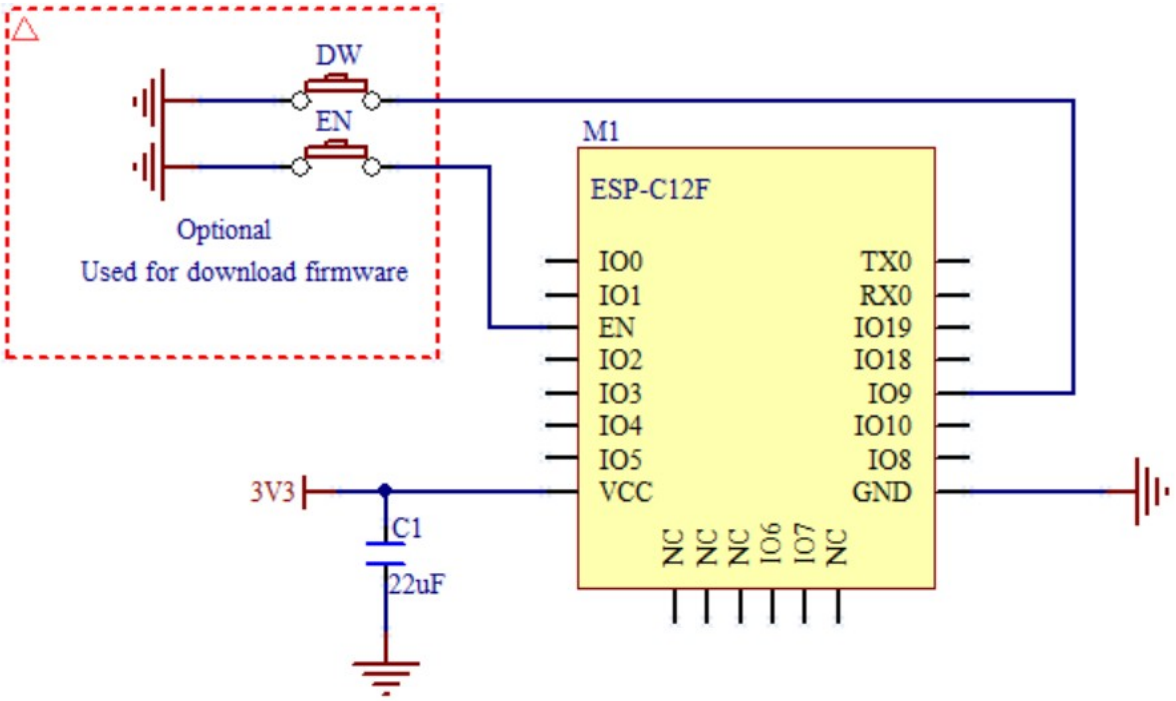

Fig.9.1 Minimum System

Note:

(1) The working voltage for module is DC 3.3V;

(2) The max current from IO of this module is 40mA;

(3) Wi-Fi module is at download mode: IO9 is LOW level, then module reset to power;

(4) Wi-Fi module is connected to RXD of the other MCU, and TXD is connected to RXD of the other MCU.

10. Recommended Layout Design

ESP-C12F module can be sold on PCB board directly. For the high RF performance for the device, please notice the placement of the module. There are three ways to use the module for Wi-Fi Module with PCB antenna.

Solution 1: optical solution. The Wi-Fi module is placed on the side of the board, and the antennas are all exposed, and there is no metal material around the antenna, including wires, metal casings, weight plates, and the like.

Solution 2: sub-optical solution. The Wi-Fi module is placed on the side of the board, and the antenna below is hollowed out. There is a gap of not less than 5 mm reserved with the PCB, and there is no metal material around the antenna, including wires, metal casings, weight plates, and the like.

Solution 3: The Wi-Fi module is placed on the side of the board, and the PCB area under the antenna is empty, and copper cannot be laid.

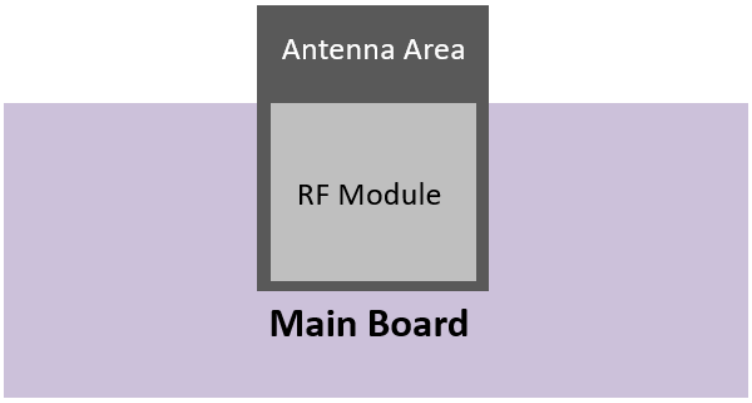

Fig.10.1 Solution 1

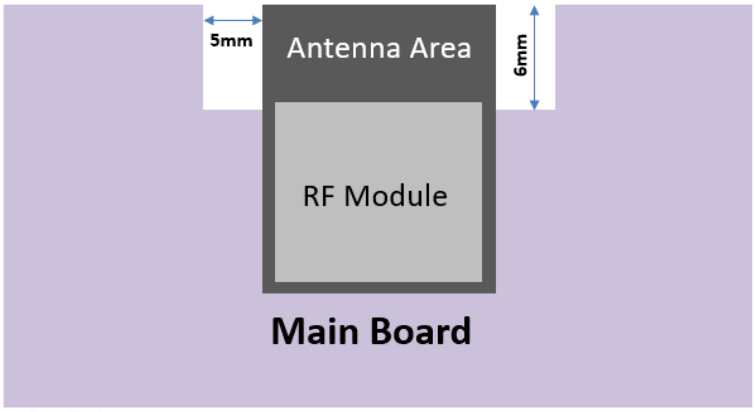

Fig.10.2 Solution 2

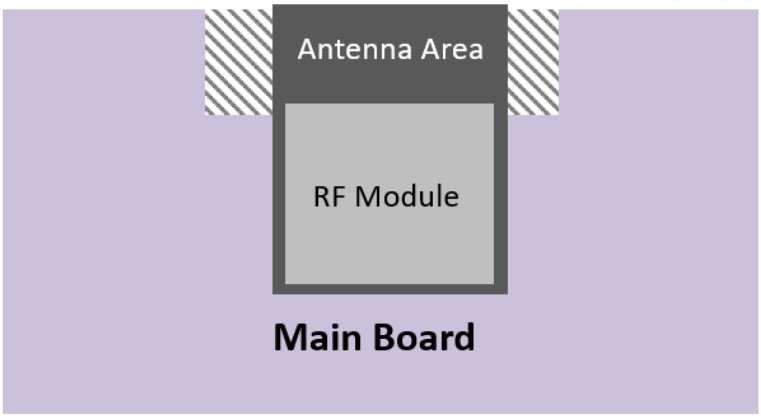

Fig.10.3 Solution 3

11. Peripheral Design Suggestion

Wi-Fi module is already integrated into high-speed GPIO and Peripheral interface, which may be generated the switch noise. If there is a high request for the power consumption and EMI characteristics,

it is suggested to connect a serial 10~100 ohm resistance, which can suppress overshoot when switching power supply, and can smooth signal. At the same time, it also can prevent electrostatic discharge (ESD).

12. Product Handling

12.1 Storage Conditions

The products sealed in moisture barrier bags (MBB) should be stored in a non-condensing atmospheric environment of < 40 °C and 90%RH. The module is rated at the moisture sensitivity level (MSL) of 3. After unpacking, the module must be soldered within 168 hours with the factory conditions 25±5 °C and 60%RH. If the above conditions are not met, the module needs to be baked.

12.2 Electrostatic Discharge (ESD)

• Human body model (HBM): ±2000 V
• Charged-device model (CDM): ±500 V

13. U.FL RF Connector

ESP-C12F module use U.FL type RF connector for external antenna connection. (IPEX V1.0).

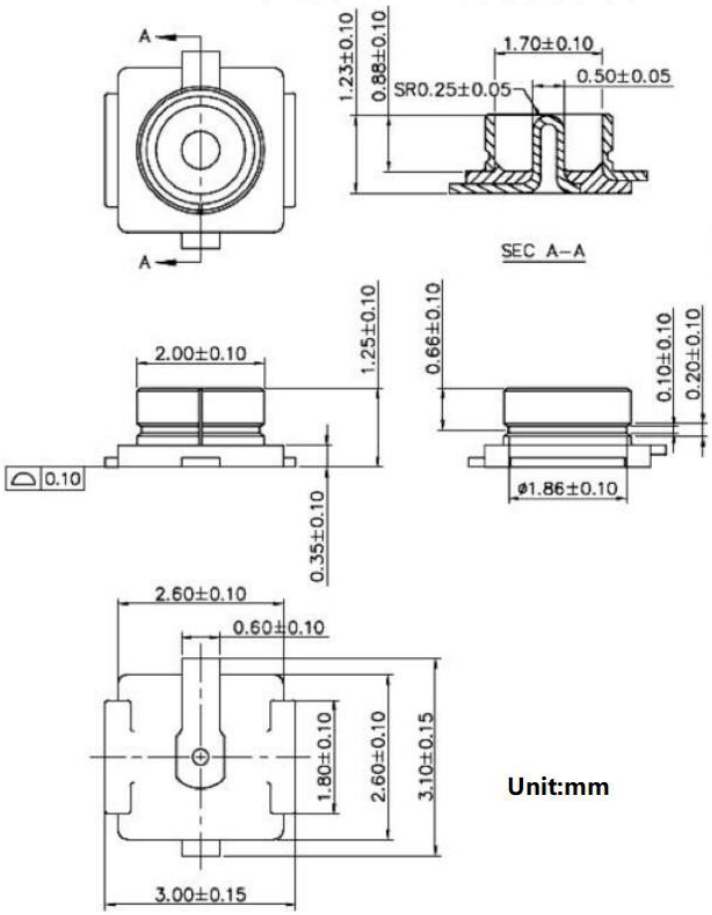

Fig.13.1 U.FL RF Connector

14. Packing Instruction

The product is packed in a tray, as shown in the following figure.

The size of the single box is: 340 x 360 x 60mm, and 800 pieces module is in the box. And the outer box size is 355 x 375 x 325mm, including 5 single box which include 4000 pieces module.

Fig.14.1 Module Package

Doctors of Intelligence & Technology
严禁复制

FCC WARNING

FCC Caution: Any changes or modifications not expressly

Approved by the party responsible for compliance could void the user's authority to operate this equipment.

This device complies with Part 15 of the FCC Rules.

Operation is subject to the following two conditions: (1) This device may not cause harmful interference, and (2) this device must accept any interference received, including interference that may cause undesired operation.

This device and its antenna(s) must not be co-located or operating in conjunction with any other antenna or transmitter.

15.105 Information to the user.

(b) For a Class B digital device or peripheral, the instructions furnished the user shall include the following or similar statement, placed in a prominent location in the text of the manual:

Note: This equipment has been tested and found to comply with the limits for a Class B digital device, pursuant to part 15 of the FCC Rules. These limits are designed to provide reasonable protection against harmful interference in a residential installation. This equipment generates, uses and can radiate radio frequency energy and, if not installed and used in accordance with the instructions, may cause harmful interference to radio communications. However, there is no guarantee that interference will not occur in a particular installation. If this equipment does cause harmful interference to radio or television reception, which can be determined by turning the equipment off and on, the user is encouraged to try to correct the interference by one or more of the following measures:

—Reorient or relocate the receiving antenna.

—Increase the separation between the equipment and receiver.

—Connect the equipment into an outlet on a circuit different from that to which the receiver is connected.

—Consult the dealer or an experienced radio/TV technician for help.

This equipment complies with FCC radiation exposure limits set forth for an uncontrolled environment. This equipment should be installed and operated with minimum distance 20 cm between the radiator and your body. Radiation Exposure Statement:

This equipment complies with FCC radiation exposure limits set forth for an uncontrolled environment.

This transmitter must not be co-located or operating in conjunction with any other antenna or transmitter.

The availability of some specific channels and/or operational frequency bands are country dependent and are firmware programmed at the factory to match the intended destination.
The firmware setting is not accessible by the end user.

The final end product must be labelled in a visible area with the following: “Contains Transmitter Module “FCC ID:2AL3B-ESP-C12F”

Requirement per KDB996369 D03

2.2 List of applicable FCC rules

List the FCC rules that are applicable to the modular transmitter. These are the rules that specifically establish the bands of operation, the power, spurious emissions, and operating fundamental frequencies. DO NOT list compliance to unintentional-radiator rules (Part 15 Subpart B) since that is not a condition of a module grant that is extended to a host manufacturer. See alsoSection 2.10 below concerning the need to notify host manufacturers that further testing is required.3

Explanation: This module meets the requirements of FCC part 15C (15.247).it Specifically identified AC Power Line Conducted Emission, Radiated Spurious emissions, Band edge and RF Conducted Spurious Emissions, Conducted Peak Output Power, Bandwidth, Power Spectral Density, Antenna Requirement.

2.3 Summarize the specific operational use conditions

Describe use conditions that are applicable to the modular transmitter, including for example any limits on antennas, etc. For example, if point-to-point antennas are used that require reduction in power or compensation for cable loss, then this information must be in the instructions. If the use condition limitations extend to professional users, then instructions must state that this information also extends to the host manufacturer's instruction manual. In addition, certain information may also be needed, such as peak gain per frequency band and minimum gain, specifically for master devices in 5 GHz DFS bands.

Explanation: The product antenna uses an irreplaceable antenna with a gain of BT ANT:-1.08dBi, WIFI ANT:-1.18dBi

2.4 Single Modular

If a modular transmitter is approved as a "Single Modular ," then the module manufacturer isresponsible for approving the host environment that the Single Modular is used with. The manufacturer of a Single Modular must describe, both in the filing and in the installation instructions, the alternative means that the Single Modular manufacturer uses to verify that the host meets the necessary requirements to satisfy the module limiting conditions.

A Single Modular manufacturer has the flexibility to define its alternative method to address the conditions that limit the initial approval, such as: shielding, minimum signaling amplitude, buffered modulation/data inputs, or power supply regulation. The alternative method could include that the limited

module manufacturer reviews detailed test data or host designs prior to giving the host manufacturer approval.

This Single Modular procedure is also applicable for RF exposure evaluation when it is necessary to demonstrate compliance in a specific host. The module manufacturer must state how control of the product into which the modular transmitter will be installed will be maintained such that full compliance of the product is always ensured. For additional hosts other than the specific host originally granted with a limited

module, a Class II permissive change is required on the module grant to register the additional host as a specific host also approved with the module.

Explanation: The module is a single module.

2.5 Trace antenna designs

For a modular transmitter with trace antenna designs, see the guidance in Question 11 of KDB Publication 996369 D02 FAQ – Modules for Micro-Strip Antennas and traces. The integration information shall include for the TCB review the integration instructions for the following aspects: layout of trace design, parts list (BOM), antenna, connectors, and isolation requirements.

a) Information that includes permitted variances (e.g., trace boundary limits, thickness, length, width, shape(s), dielectric constant, and impedance as applicable for each type of antenna); b) Each design shall be considered a different type (e.g., antenna length in multiple(s) of frequency, the wavelength, and antenna shape (traces in phase) can affect antenna gain and must be considered); c) The parameters shall be provided in a manner permitting host manufacturers to design the printed circuit (PC) board layout; d) Appropriate parts by manufacturer and specifications; e) Test procedures for design verification; and f) Production test procedures for ensuring compliance

The module grantee shall provide a notice that any deviation(s) from the defined parameters of the antenna trace, as described by the instructions, require that the host product manufacturer must notify the module grantee that they wish to change the antenna trace design. In this case, a Class II permissive change application is required to be filed by the grantee, or the host manufacturer can take responsibility through the change in FCC ID (new application) procedure followed by a Class II permissive change application

2.6 RF exposure considerations

It is essential for module grantees to clearly and explicitly state the RF exposure conditions that permit a host product manufacturer to use the module. Two types of instructions are required for RF exposure information: (1) to the host product manufacturer, to define the application conditions (mobile, portable – xx cm from a person’s body); and (2) additional text needed for the host product manufacturer to provide to end users in their end-product manuals. If RF exposure statements and use conditions are not provided, then the host product manufacturer is required to take responsibility of the module through a change in FCC ID (new application).

Explanation: The module complies with FCC radiofrequency radiation exposure limits for uncontrolled environments. The device is installed and operated with a distance of more than 20 cm between the radiator and your body." This module follows FCC statement design, FCC ID :2AL3B-ESP-C12F

2.7 Antennas

A list of antennas included in the application for certification must be provided in the instructions. For modular transmitters approved as limited modules, all applicable professional installer instructions must be included as part of the information to the host product manufacturer. The antenna list shall also identify the antenna types (monopole, PIFA, dipole, etc. (note that for example an “omni-directional antenna” is not considered to be a specific “antenna type”).

For situations where the host product manufacturer is responsible for an external connector, for example with an RF pin and antenna trace design, the integration instructions shall inform the installer that unique antenna connector must be used on the Part 15 authorized transmitters used in the host product.

The module manufacturers shall provide a list of acceptable unique connectors.

Explanation: The product antenna uses an irreplaceable antenna with a gain of BT ANT:-1.08dBi, WIFI ANT:-1.18dBi

2.8 Label and compliance information

Grantees are responsible for the continued compliance of their modules to the FCC rules. This
includes advising host product manufacturers that they need to provide a physical or e-label stating “Contains FCC ID” with their finished product. See Guidelines for Labeling and User Information for RF Devices – KDB Publication 784748.

Explanation: The host system using this module, should have label in a visible area indicated the following texts: "Contains FCC ID: 2AL3B-ESP-C12F

2.9 **Information on test modes and additional testing requirements5**

Additional guidance for testing host products is given in KDB Publication 996369 D04 Module Integration Guide. Test modes should take into consideration different operational conditions for a stand-alone modular transmitter in a host, as well as for multiple simultaneously transmitting modules or other transmitters in a host product.

The grantee should provide information on how to configure test modes for host product evaluation for different operational conditions for a stand-alone modular transmitter in a host, versus with multiple, simultaneously transmitting modules or other transmitters in a host.

Grantees can increase the utility of their modular transmitters by providing special means, modes, or instructions that simulates or characterizes a connection by enabling a transmitter. This can greatly simplify a host manufacturer’s determination that a module as installed in a host complies with FCC requirements.

Explanation: ShenZhen Doctors of Intelligence & Technology Co.,Ltd. can increase the utility of our modular transmitters by providing instructions that simulates or characterizes a connection by enabling a transmitter.

2.10 Additional testing, Part 15 Subpart B disclaimer

The grantee should include a statement that the modular transmitter is only FCC authorized for the specific rule parts (i.e., FCC transmitter rules) listed on the grant, and that the host product manufacturer is responsible for compliance to any other FCC rules that apply to the host not covered by the modular transmitter grant of certification. If the grantee markets their product

as being Part 15
Subpart B compliant (when it also contains unintentional-radiator digital circuity), then the grantee shall provide a notice stating that the final host product still requires Part 15 Subpart B compliance testing with the modular transmitter installed.

Explanation: The module without unintentional-radiator digital circuity, so the module does not require an evaluation by FCC Part 15 Subpart B. The host shoule be evaluated by the FCC Subpart B.