BL-M6158NS1-M

802.11n 150Mbps WLAN +BLE v5.0

SDIO Module Specification

SHENZHEN BILIAN ELECTRONIC CO., LTD

Add: 10~11/F, Building 1A, Huaqiang idea park, Guangming district, Shenzhen. Guangdong, China

Web: www.b-link.net.cn

（Top View）

（Bottom View）

Module Name: BL-M6158NS1-M	
Module Type: 802.11b/g/n 150Mbps WLAN+BLE v5.0 Combo SDIO Module	
Revision: V1.0	
Customer Approval:	
Company:	
Title:	
Signature:	Date:
LB-link Approval:	
Title:	
Signature:	Date:

Revision History

Revision	Summary	Release Date
0.1	Initial release	2022-10-22
1.0	Official version	2022-11-30

1. Introduction

The BL-M6158NS1-M is a highly integrated Combo module base on SV6158-M, which combines with 2.4G 1T1R WLAN, Bluetooth Low Energy, MCU and RAM, SDIO interface, PMU in single chip. The module provides feature-rich wireless connectivity, cost-effective, high throughput performance, low-power ideal for OTT boxes, IP cameras, POS, and other devices that need wireless connection.

1.1 Features

- 2.4G single band with 2.4~2.4835GHz operating frequencies
- SDIO 2.0 interface supports clock up to 50MHz
- Compatible IEEE802.11 b/g/n with 20/40M bandwidth, PHY rate can reach up to 150Mbps
- Compatible Bluetooth core specification v5.0, supports BLE 1Mbps only
- Connect to external antenna through Half hole pad

1.2 Block Diagram

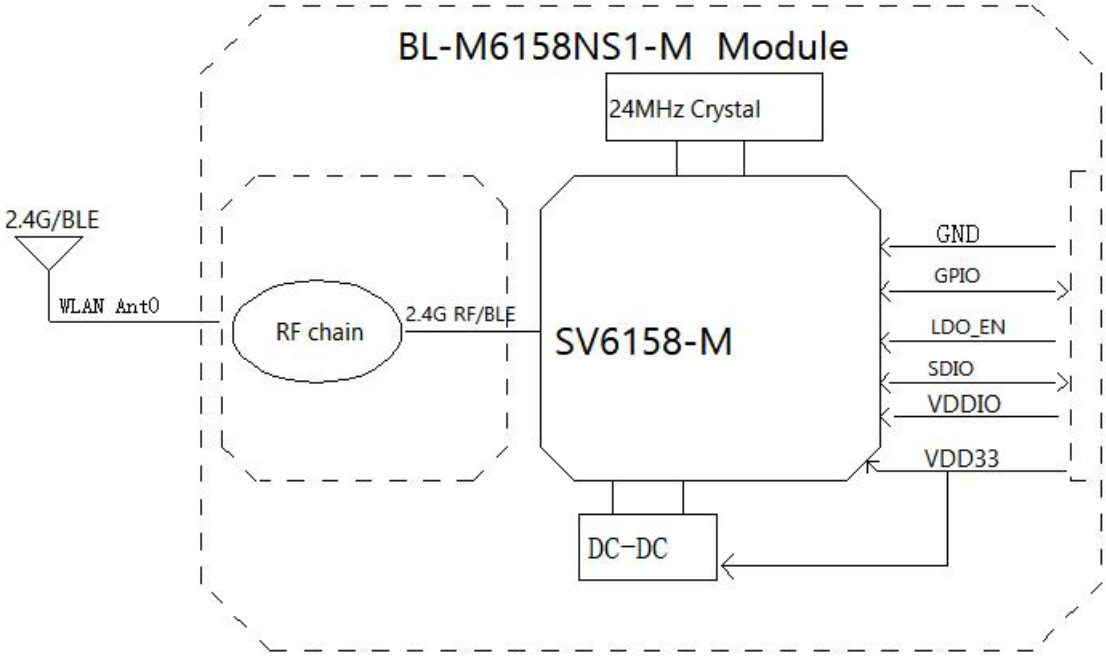

1.3 General Specifications

Module Name	BL-M6158NS1-M
Chipset	MPN： SV6158-M Certified Type: SV6158
WLAN Standards	IEEE802.11b/g/n
BT Specification	Bluetooth v5.0 Low Energy
Host Interface	SDIO for WLAN & Bluetooth
Antenna	Connect to external antenna through Half hole pad
Dimension	12.0*12.0*2.20mm (L*W*H)
Power Supply	3.3V±0.2V @500 mA (Max) main power; 1.8V/3.3V for digital I/O power
Operation Temperature	-20℃ to +70℃
Operation Humidity	10% to 95% RH (Non-Condensing)
Storage Temperature	-40℃ to +85℃
Storage Humidity	10% to 95% RH (Non-Condensing)

2. Pin Assignments

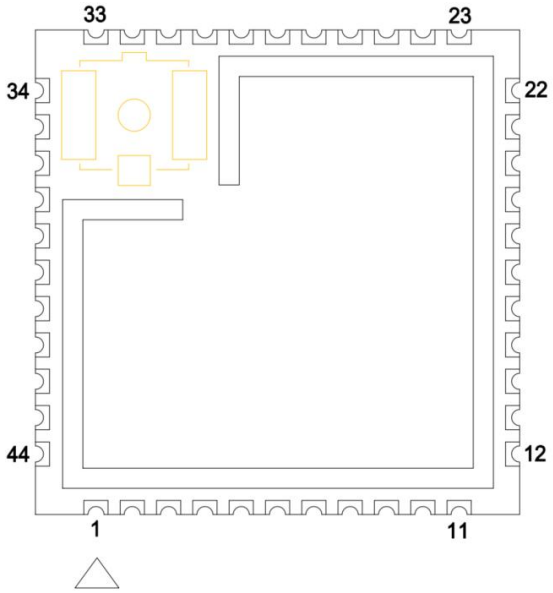

(Top view)

2.1 Pin Definition

No	Pin Name	Type	I/O Level	Description
1	GND	RF		RF Ground connections
2	RF	I/O		RF Pad for 2.4G WLAN/2.4G BT
3	GND	RF		RF Ground connections
4	NC	/		NC
5	GPIO12	I/O	VDDIO	1. General Purpose I/O Pin GPIO12 2. Strap Pin, internal pull low to set "SDIO Mode", external pull high to set "SPI Mode" during power on
6	NC	/		NC
7	NC	/		NC
8	NC	/		NC
9	VDD33	P		VDD3.3V power supply
10	NC	/		NC
11	NC	/		NC
12	LDO_EN	I	VDDIO	Reset input signal to reset /power down the module, active low, internal pull high by 10K resistor.
13	WL_WAKE_UP_HOST	I/O	VDDIO	1. General Purpose I/O Pin GPIO14 2. WLAN Wake Up Host output signal
14	SD_D2	I/O		SDIO data 2
15	SD_D3	I/O		SDIO data 3 / SPI_CSN
16	SD_CMD	I/O		SDIO command / SPI_MOSI
17	SD_CLK	I		SDIO clock / SPI_CLK
18	SD_D0	I/O		SDIO data 0 / SPI_MISO
19	SD_D1	I/O		SDIO data 1
20	GND	P		Ground connections
21	NC	/		NC
22	VDDIO	P		1.8V or 3.3V power supply for digital I/O
23	NC	/		NC
24	NC	/		NC
25	NC	/		NC
26	NC	/		NC
27	NC	/		NC
28	NC	/		NC
29	NC	/		NC
30	NC	/		NC

31	GND	P		Ground connections
32	NC	/		NC
33	GND	P		Ground connections
34	NC	/		NC
35	NC	/		NC
36	GND	P		Ground connections
37	GPIO01/UART_LOG_TX	I/O	VDDIO	1. General Purpose I/O Pin GPIO1 2. UART_TXD for debug
38	GPIO00/UART_LOG_RX	I/O	VDDIO	1. General Purpose I/O Pin GPIO0 2. UART_RXD for debug
39	NC	/		NC
40	NC	/		NC
41	NC	/		NC
42	NC	/		NC
43	NC	/		NC
44	NC	/		NC

P: Power, I: Input, O: Output, I/O: In/Output, RF: Analog RF Port

3. Electrical and Thermal Specifications

3.1 Recommended Operating Conditions

Parameters		Min	Typ	Max	Units
Ambient Operating Temperature		-20	25	70	℃
External Antenna VSWR			1.7	2.0	/
Supply Voltage	VDD33	3.1	3.3	3.5	V
I/O Supply Voltage	VDDIO	1.75	3.3	3.5	V

3.2 Current Consumption

Conditions : VDD33=3.3V ; Ta:25℃			
Use Case	VDD33 Current (average)		
	Typ	Max	Units
WLAN TRX Throughput (Linux Driver) 2g	135	292	mA
2.4G 11b@1Mbps TX (RF-Test) 17dBm	231	256	mA

2.4G 11b@1Mbps RX (RF-Test)	48	72	mA
2.4G 11b@11Mbps TX (RF-Test) 17dBm	230	256	mA
2.4G 11b@11Mbps RX (RF-Test)	48	72	mA
2.4G 11g@6Mbps TX (RF-Test)16dBm	228	256	mA
2.4G 11g@6Mbps RX (RF-Test)	48	72	mA
2.4G 11g@54Mbps TX (RF-Test)14dBm	191	232	mA
2.4G 11g@54Mbps RX (RF-Test)	48	72	mA
2.4G 11n@HT20_MCS0 TX (RF-Test)16dBm	225	248	mA
2.4G 11n@HT20_MCS0 RX (RF-Test)	48	72	mA
2.4G 11n@HT20_MCS7 TX (RF-Test)14dBm	189	232	mA
2.4G 11n@HT20_MCS7 RX (RF-Test)	50	75	mA
2.4G 11n@HT40_MCS0 TX (RF-Test)16dBm	221	256	mA
2.4G 11n@HT40_MCS0 RX (RF-Test)	50	75	mA
2.4G 11n@HT40_MCS7 TX (RF-Test)14dBm	186	232	mA
2.4G 11n@HT40_MCS7 RX (RF-Test)	50	75	mA
BT			
BLE 1M TX(RF-Test) 5dBm	101	128	mA
BLE 1M RX(RF-Test)	48	75	mA

4. WLAN & Bluetooth RF Specifications

4.1 2.4G WLAN RF Specification

Conditions : VDD33=3.3V ; Ta:25℃	
Features	**Description**
WLAN Standard	IEEE 802.11b/g/n
Frequency Range	2.4~2.4835GHz (2.4GHz ISM Band)
Channels	Ch1~Ch13 (For 20MHz Channels)
Modulation	802.11b (DSSS): DBPSK, DQPSK, CCK; 802.11g (OFDM): BPSK, QPSK, QAM16, QAM64; 802.11n (OFDM): BPSK, QPSK, QAM16, QAM64;
Date Rate	802.11b: 1, 2, 5.5, 11Mbps; 802.11g: 6, 9, 12, 18, 24, 36, 48, 54Mbps; 802.11n (HT20): MCS0~MCS7(1T1R_SISO) 6.5~72.2Mbps; 802.11n (HT40): MCS0~MCS7(1T1R_SISO) 13.5~150Mbps;

Frequency Tolerance	≦ ±20ppm

2.4G Receiver Specifications			
RX Rate	Min Input Level(Typ,dBm)	Max Input Level(Typ,dBm)	PER
802.11b@1Mbps	-94	-10	< 8%
802.11b@11Mbps	-85	-10	< 8%
802.11g@6Mbps	-88	-10	< 10%
802.11g@54Mbps	-70	-10	< 10%
802.11n@HT20_MCS0	-86	-10	< 10%
802.11n@HT20_MCS7	-69	-10	< 10%
802.11n@HT40_MCS0	-84	-10	< 10%
802.11n@HT40_MCS7	-66	-10	< 10%

4.2 Bluetooth RF Specification

Conditions: VDD33=3.3V; Ta:25℃	
Features	Description
Bluetooth Specification	Bluetooth 5.0 Low Energy
Frequency Range	2.4~2.4835GHz(2.4GHz ISM Band)
Channels	Bluetooth Low Energy: Ch0~Ch39 (For 2MHz Channels);
Power Classes	Bluetooth Low Energy: Class1.5;
Date Rate & Modulation	BLE_1Mbps: GFSK;

Bluetooth Transmitter Specifications			
BLE_1M Modulation Characteristics			
Δf1avg	225KHz	249.60KHz	275KHz
Δf2avg	225KHz	231.08KHz	275KHz
Δf2max	185KHz	226.10KHz	/
Δf2avg/Δf1avg	0.8	0.92	/

Bluetooth Receiver Specifications				
Items	Sensitivity		Maximum Input Level	
	Input Level(Typ)	BER	Input Level(Typ)	BER
BLE 1M	-80dBm	≦5%	-10dBm	≦5%

5. Mechanical Specifications

5.1 Module Outline Drawing

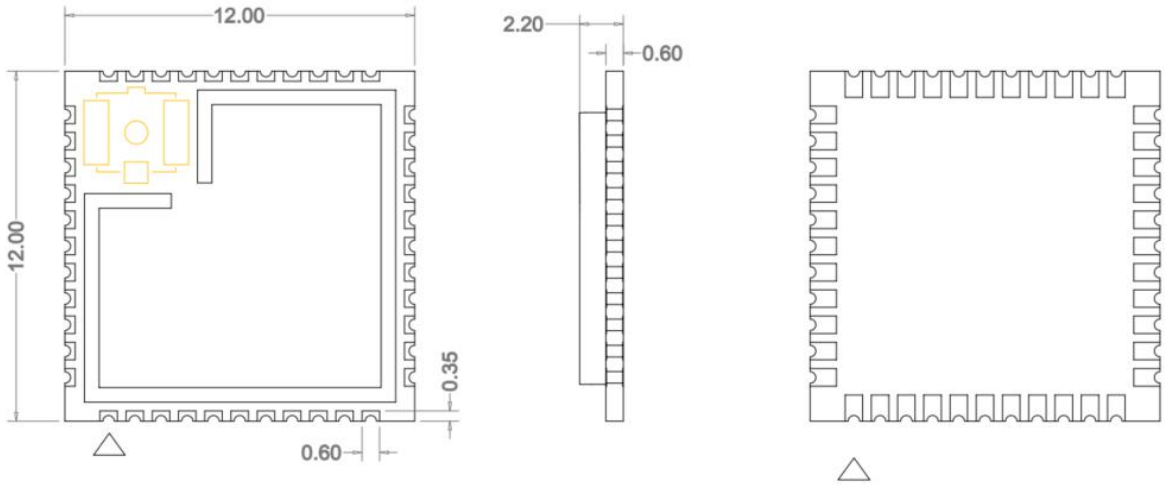

(Top View) (Side View) (Bottom View)

Module dimension: 12.0*12.0*2.20mm (L*W*H; Tolerance: ±0.15mm)

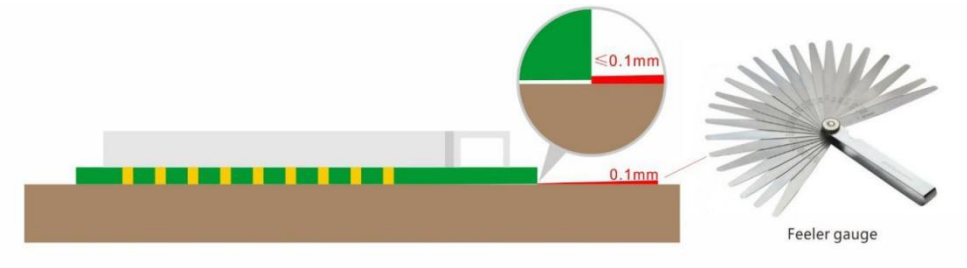

Module Bow and Twist: ≤0.1mm

5.2 Mechanical Dimensions

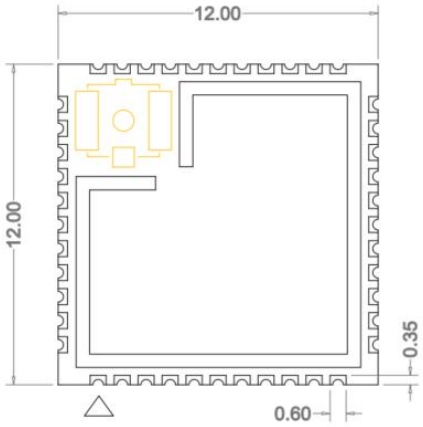

(Top View)

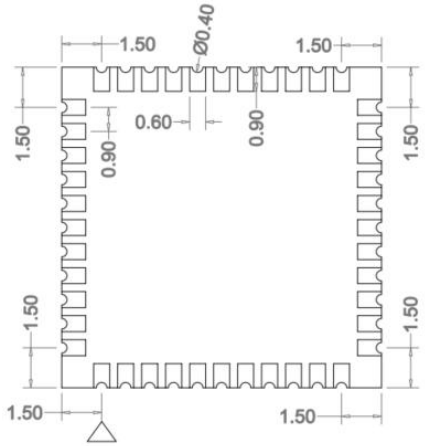

(Bottom View)

6. Application Information

6.1 Typical Application Circuit

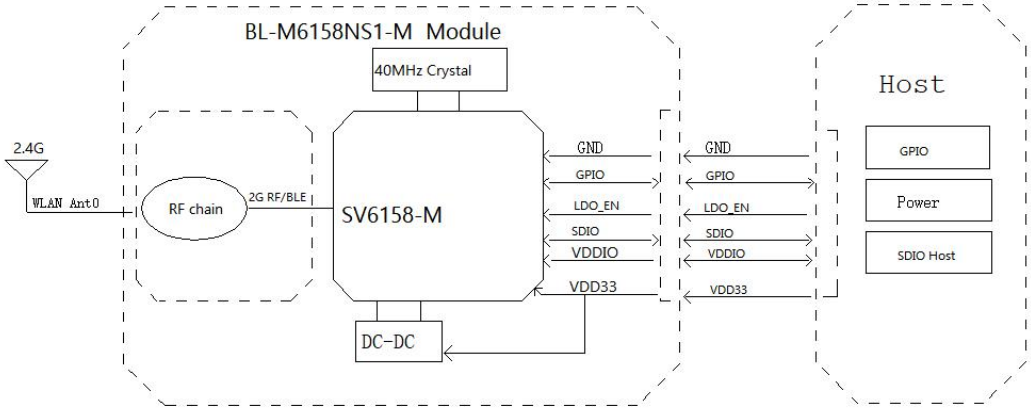

6.2 Recommend PCB Layout Footprint

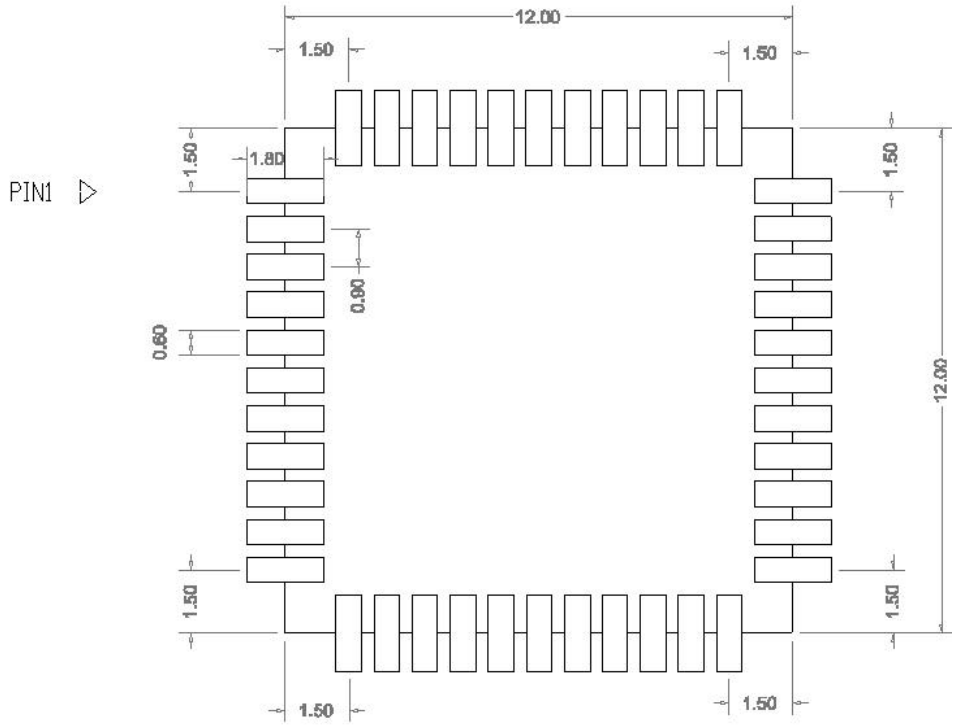

6.3 Reflow Soldering Standard Conditions

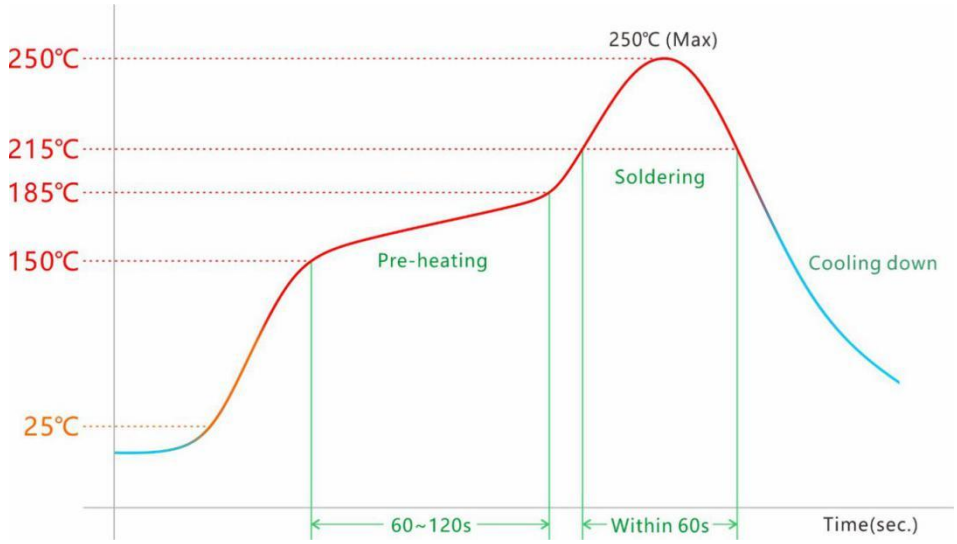

Please use the reflow within 2 times.
Set up the highest temperature within 250℃.

7. Key Components Of Module

No.	Parts	Specification	Manufacturer	Note
1	Chipset	MPN:SV6158-M Certified Type: SV6158	iComm-semi	
2	PCB	BL-M6158NS1	Shenzhen Tie Fa Technology	
			Quzhou Sunlord Electronics Co., Ltd	
3	Crystal	24MHZ-10PPM-12pF-3225	Lucki Electronics Co., Ltd	
			Shenzhen Kaiyuexiang Electronics Co., Ltd	
			Chengde Oscillator Electronic Technology Co., Ltd.	

8. Package and Storage Information

8.1 Package Dimensions

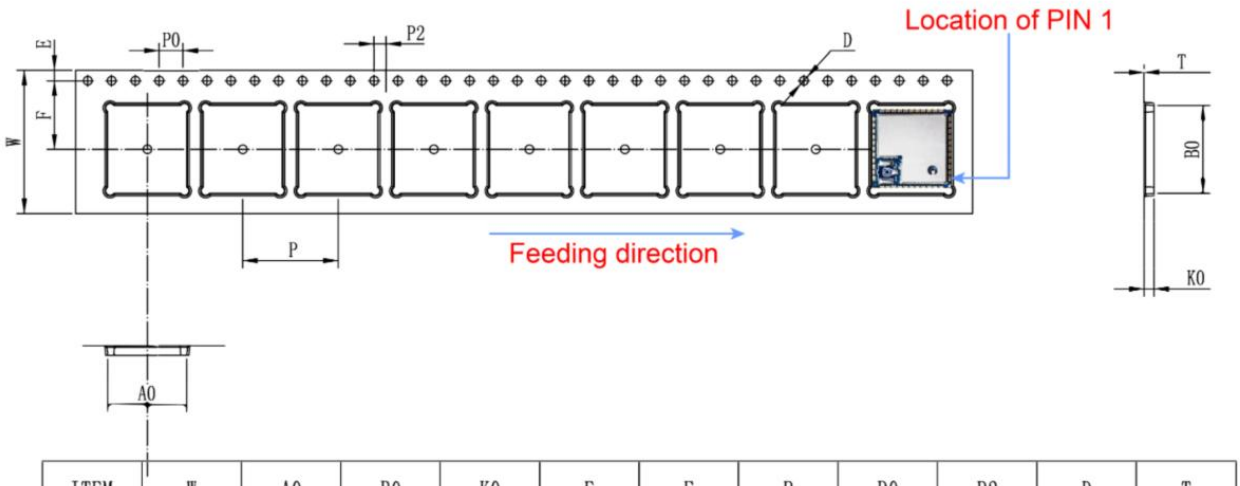

ITEM	W	A0	B0	K0	E	F	P	P0	P2	D	T
DIM	24.00+0.3	12.50±0.1	12.50±0.1	2.40±0.1	1.75±0.1	11.5±0.1	20.00±0.1	4.00±0.1	2.00±0.1	Ø1.5±0.1	0.30±0.05

Package specification:

1. 1,000 modules per roll and 5,000 modules per box.
2. Outer box size: 37.5*36*29cm.
3. The diameter of the blue environment-friendly rubber plate is 13 inches, with a total thickness of 28mm (with a width of 24mm carrying belt).
4. Put 1 package of dry agent (20g) and humidity card in each anti-static vacuum bag.
5. Each carton is packed with 5 boxes.

8.2 Storage Conditions

Absolute Maximum Ratings:

Storage temperature: -40℃ to +85℃,
Storage humidity: 10% to 95 (Non-Condensing)

Recommended Storage Conditions:

Storage temperature: 5℃ to +40℃,
Storage humidity: 20% to 90% RH

Please use this Module within 12month after vacuum-packaged.
The Module shall be stored without opening the packing.
After the packing opened, the Module shall be used within 72hours.
When the color of the humidity indicator in the packing changed, the Module shall be baked before soldering.
Baking condition: 60℃, 24hours, 1time.

ESD Sensitivity:

ESD Protection: 2KV(HBM, Maximum rating)
The Module is a static-sensitive electronic device.
Do not operate or store near strong electrostatic fields.
Take proper ESD precautions!

ESD CAUTION

8.3 FCC Statement

This device complies with part 15 of the FCC Rules. Operation is subject to the following two conditions:
(1) This device may not cause harmful interference, and
(2) this device must accept any interference received, including interference that may cause undesired operation.
This equipment has been tested and found to comply with the limits for a Class B digital device, pursuant to part 15 of the FCC Rules. These limits are designed to provide reasonable protection against harmful interference in a residential installation. This equipment generates, uses and can radiate radio frequency energy and, if not installed and used in accordance with the instructions, may cause harmful interference to radio communications. However, there is no guarantee that interference will not occur in a particular installation. If this equipment does cause harmful interference to radio or television reception, which can be determined by turning the equipment off and on, the user is encouraged to try to correct the interference by one or more of the following measures:

- Reorient or relocate the receiving antenna.

- Increase the separation between the equipment and receiver.

- Connect the equipment into an outlet on a circuit different from that to which the receiver is connected.

- Consult the dealer or an experienced radio/TV technician for help.

This modular has been tested and found to comply with part 15 requirements for Modular Approval.
FCC Caution: Any changes or modifications not expressly approved by the party responsible for compliance could void the user's authority to operate the equipment. This transmitter must not be co-located or operating in conjunction with any other antenna or transmitter.

Integration instructions for host product manufacturers according to KDB 996369 D03 OEM Manual v01r01

8.4 List of applicable FCC rules

CFR 47 FCC Part 15 Subpart C and Subpart F has been investigated. It is applicable to the modular transmitter

8.5 Specific Operational Use Conditions - Antenna Placement Within the Host Platform

The module is tested for standalone mobile RF exposure use condition.

- The antenna must be installed such that 20cm is maintained between the antenna and users,
- The transmitter module may not be co-located with any other transmitter or antenna.

In the event that these conditions cannot be met (for example certain laptop configurations or co-location with another transmitter), then the FCC authorization is no longer considered valid and the FCC ID cannot be used on the final product. In these circumstances, the OEM integrator will be responsible for re-evaluating the end product (including the transmitter) and obtaining a separate FCC authorization.

8.6 Trace Antenna Designs

Users should connect antennas to half hole pad through copper tube structure or FP types of RF trace and the trace impedance must be controlled in 50Ω.recommends that the total insertion loss between the antenna pads and antennas should meet the following requirements:

Trace loss

Frequency	Loss
2400MHz-2500MHz	＜0.6dB
5150MHz-5850MHz	＜1.2dB

To facilitate the antenna tuning and certification test, a RF connector and an antenna matching circuit should be added. The following figure is the recommended circuit.

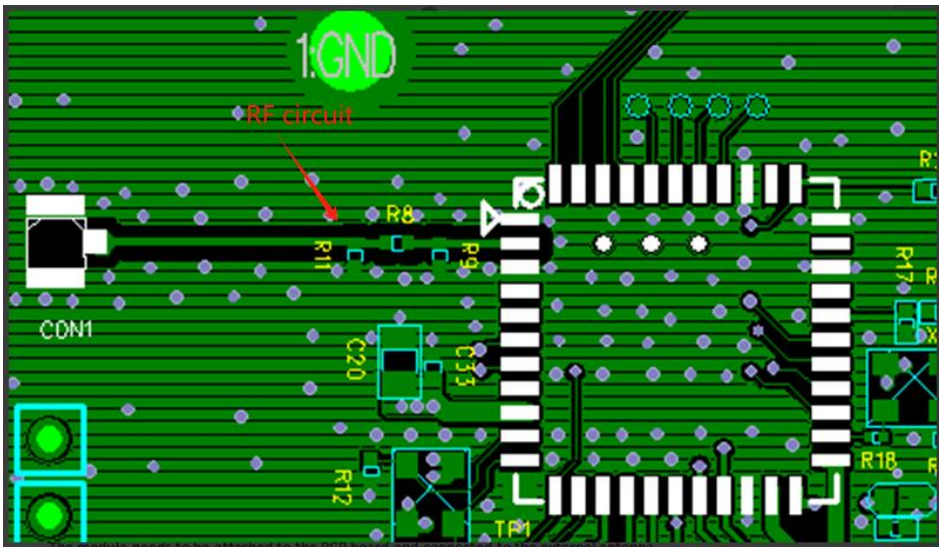

The module needs to be attached to the PCB board and connected to the external antenna through the solder joint of the circuit on the PCB. The gain of the external antenna is 2dBi（Max.）the internal structure is copper tube structure or FPC. A resistance of 0R is added between the module and the antenna at L1 to ensure that the impedance of the connection between the module and the antenna reaches 50R.The CON1 position on the PCB is where the external antenna is connected.

RF traces layout

1.Keep the RF trace from module ant pin to antenna as short as possible

2.RF trace should be 50 Ω either on the top layer or in the inner layer

3.RF trace should be avoided right angle and sharp angle.

4.Put enough GND vias around RF traces.

5.RF trace should be far away from other high speed signal lines.

Avoiding the paroling rout of other system antennas nearly.

There should be some distance from The GND to the inner conductor of the IPEX connector. It is better to keep out all the layers from inner to the outer conductor.

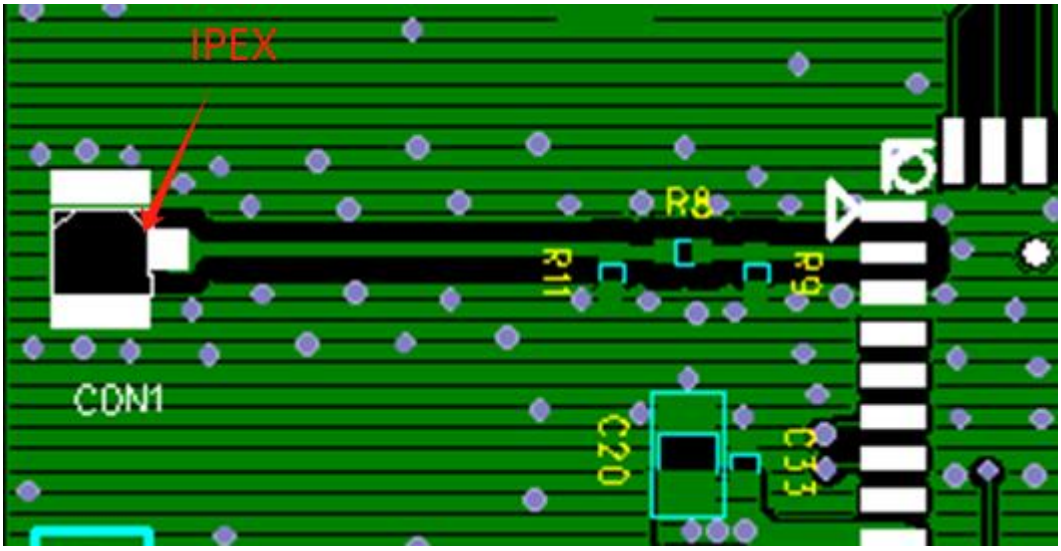

External Antenna VSWR

Parameters	Min	Typ	Max
External Antenna VSWR		1.7	2.0

8.7 RF Exposure Considerations

This device complies with FCC radiation exposure limits set forth for an uncontrolled environment. This equipment should be installed and operated with minimum distance 20cm between the radiator & your body.

8.8 Antenna Type and Gain

The following antennas have been certified for use with this module.

Only antennas of the same type with equal or lower gain may also be used with this module.

Other types of antennas and/or higher gain antennas may require the additional authorization for operation.

Antenna Specification list below:

Model	**Type**	**Connector**	**Peak gain (dBi)**
			2400-2483.5 MHz
BL-M6158NS1-M	External Antenna	/	2.3dBi

8.9 End Product Labelling Compliance Information

When the module is installed in the host device, the FCC ID label must be visible through a window on the final device or it must be visible when an access panel, door or cover is easily removed. If not, a second label must be placed on the outside of the final device that contains the following text: “Contains FCC ID: **2AL6KBL-M6158NS1-M**”. The FCC ID can be used only when all FCC compliance requirements are met.

8.10 Information on Test Modes and Additional Testing Requirements

This transmitter is tested in a standalone mobile RF exposure condition and any co-located or simultaneous transmission with other transmitter(s) class II permissive change re-evaluation or new FCC authorization.

Host manufacturer installed this modular with single modular approval should perform the test of radiated emission and spurious emission according to FCC part 15C, Part 15E, 15.209, 15.207 requirement, only if the test result comply with FCC part 15C, Part 15E, 15.209, 15.207 requirement, then the host can be sold legally.

8.11 Additional testing, Part 15 Subpart B Disclaimer

This transmitter modular us tested as a subsystem and its certification does not cover the FCC Part 15 Subpart B rules requirement applicable to the final host. The final host will still need to be reassessed for compliance to this portion of rules requirements if applicable.

As long as all conditions above are met, further transmitter test will not be required. However, the OEM integrator is still responsible for testing their end-product for any additional compliance requirements required with this modular installed.

8.12 Manual Information to The End User

The OEM integrator has to be aware not to provide information to the end user regarding how to install or remove this RF module in the user’s manual of the end product which integrates this module.

The host integrator must follow the integration instructions provided in this document and ensure that the composite system end product complies with the requirements by a technical assessment or evaluation to the rules and to KDB Publication 996369.

The host integrator installing this module into their product must ensure that the final composite product complies with the requirements by a technical assessment or evaluation to the rules, including the transmitter operation and should refer to guidance in KDB Publication 996369.

OEM/Host Manufacturer Responsibilities

OEM/Host manufacturers are ultimately responsible for the compliance of the Host and Module. The final product must be reassessed against all the essential requirements of the FCC rule such as FCC Part 15 Subpart B before it can be placed on the US market. This includes reassessing the transmitter module for compliance with the Radio and RF Exposure essential requirements of the FCC rules.

8.13 How to Make Changes - Important Note

In the event that these conditions cannot be met (for example certain laptop configurations or co-location with another transmitter), then the FCC authorization is no longer

considered valid and the FCC ID cannot be used on the final product. In these circumstances, the OEM integrator will be responsible for re-evaluating the end product (including the transmitter) and obtaining a separate FCC authorization.

8.14 Limited Module Procedures

Not applicable