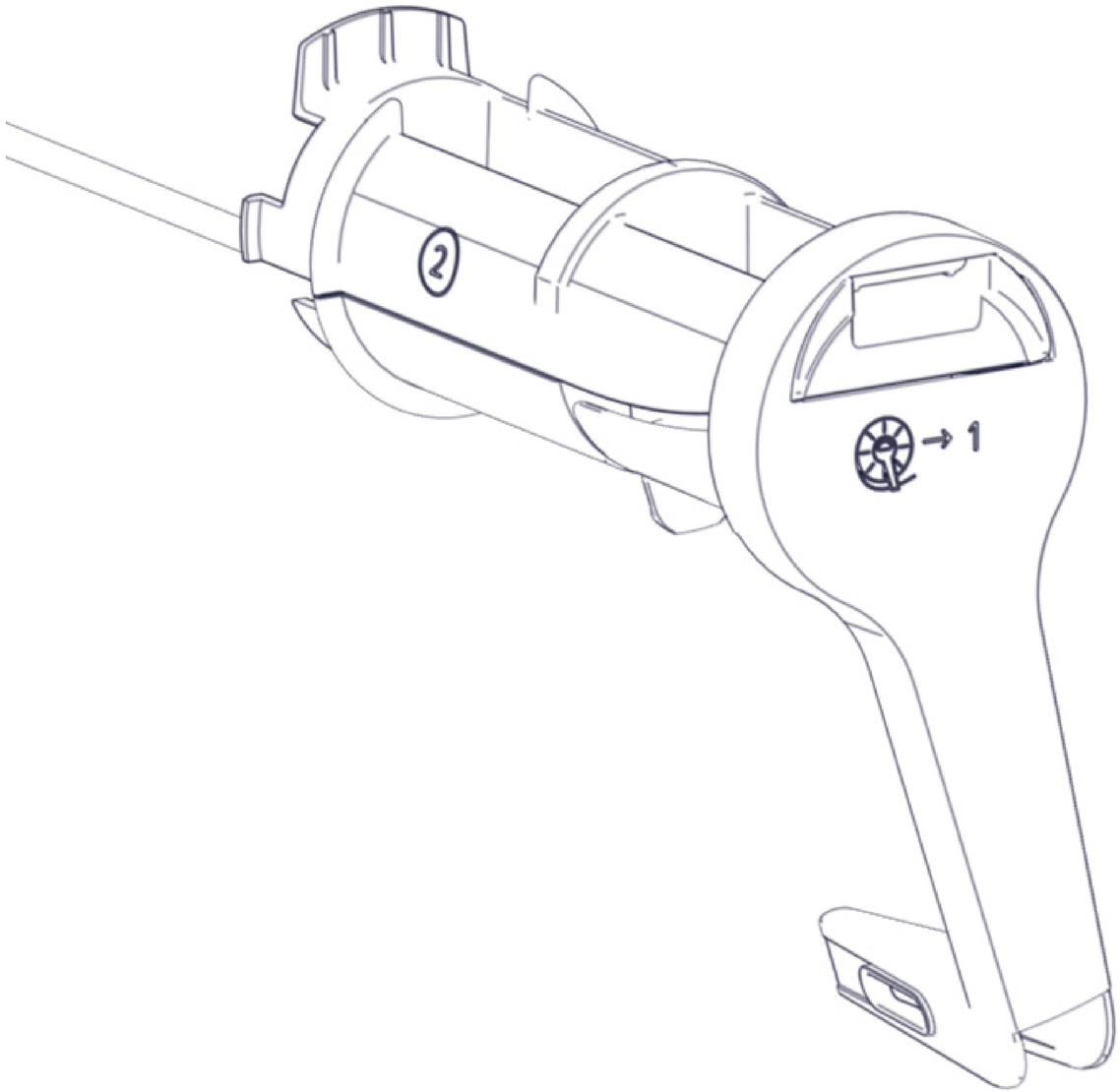

Ultimaker RFID Reader 1726-A

Multiple Machines

User Guide

Ultimaker

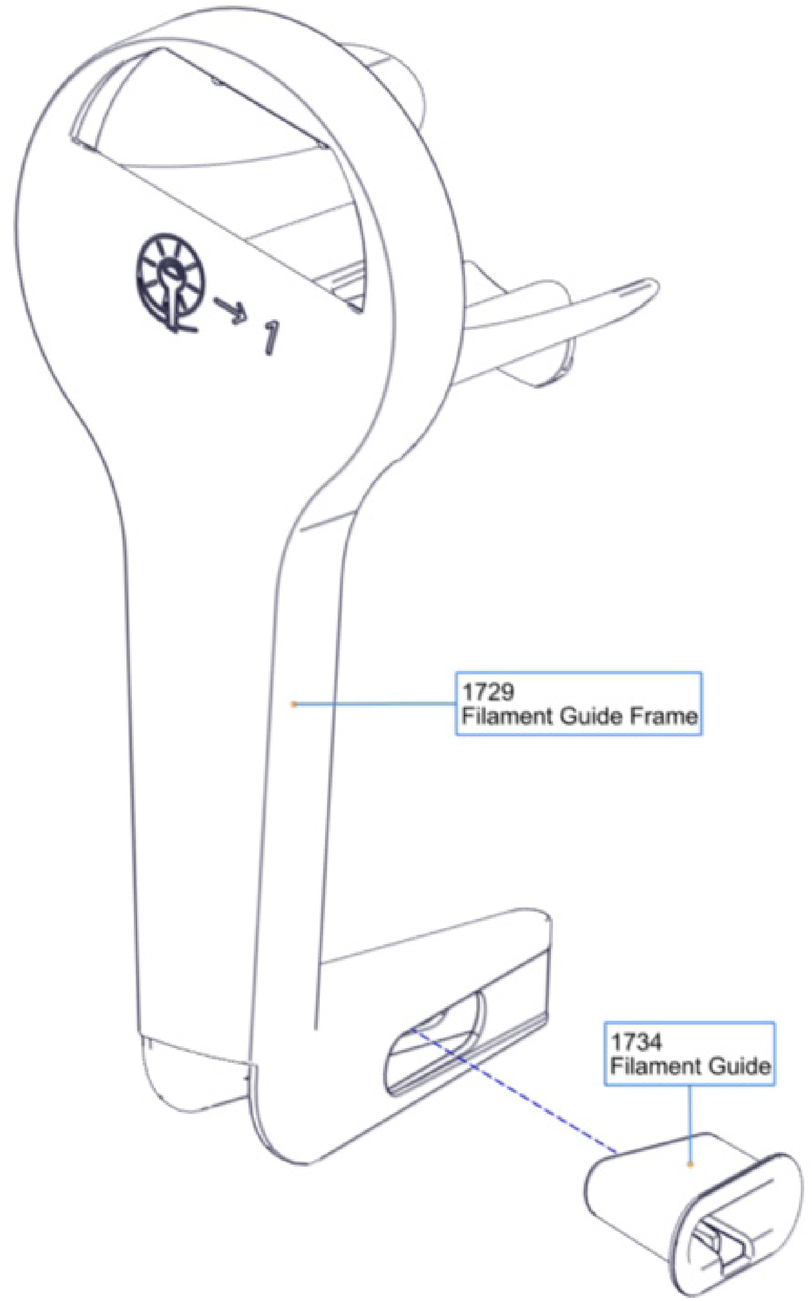

Ultimaker

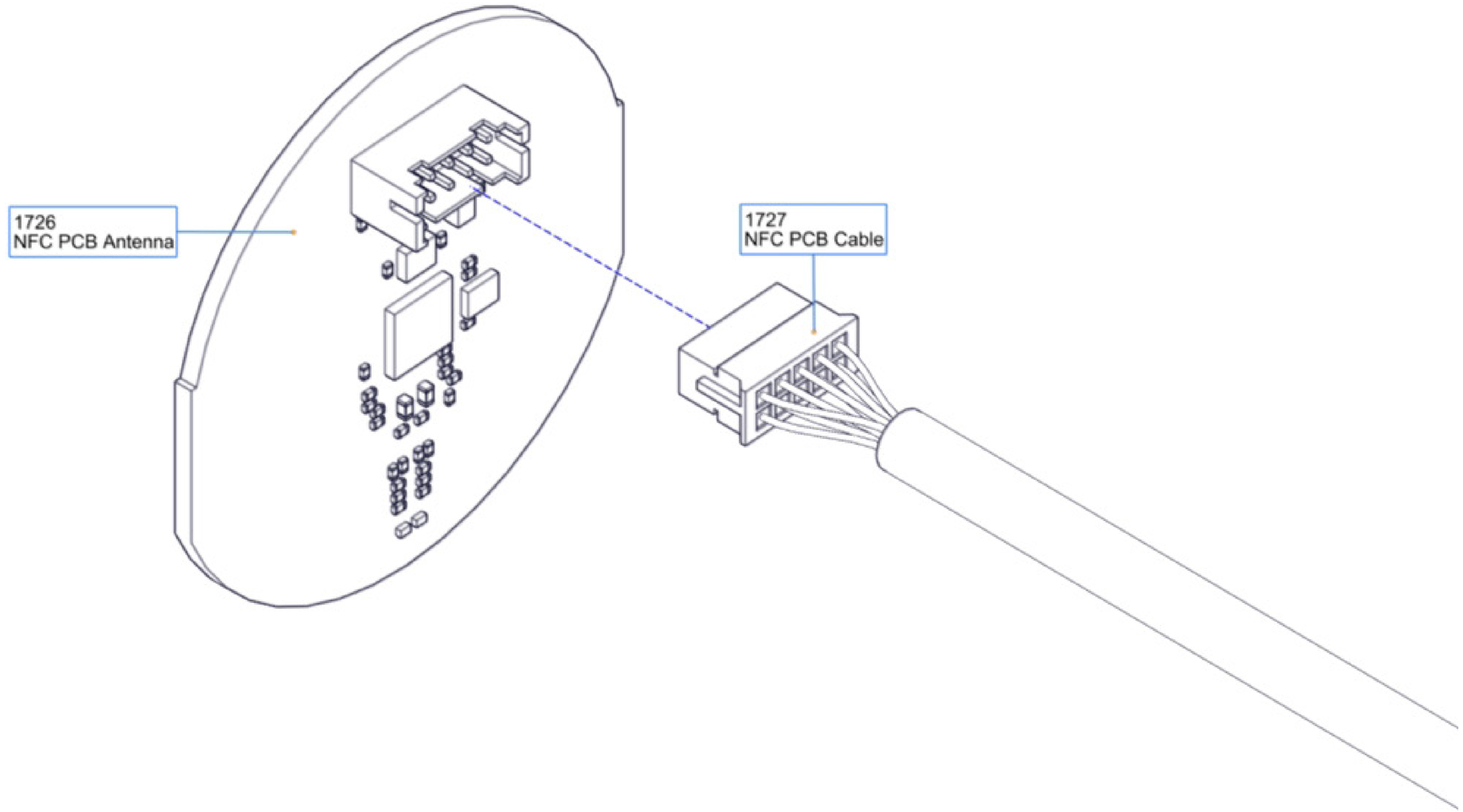
1726
NFC PCB Antenna
1727
NFC PCB Cable

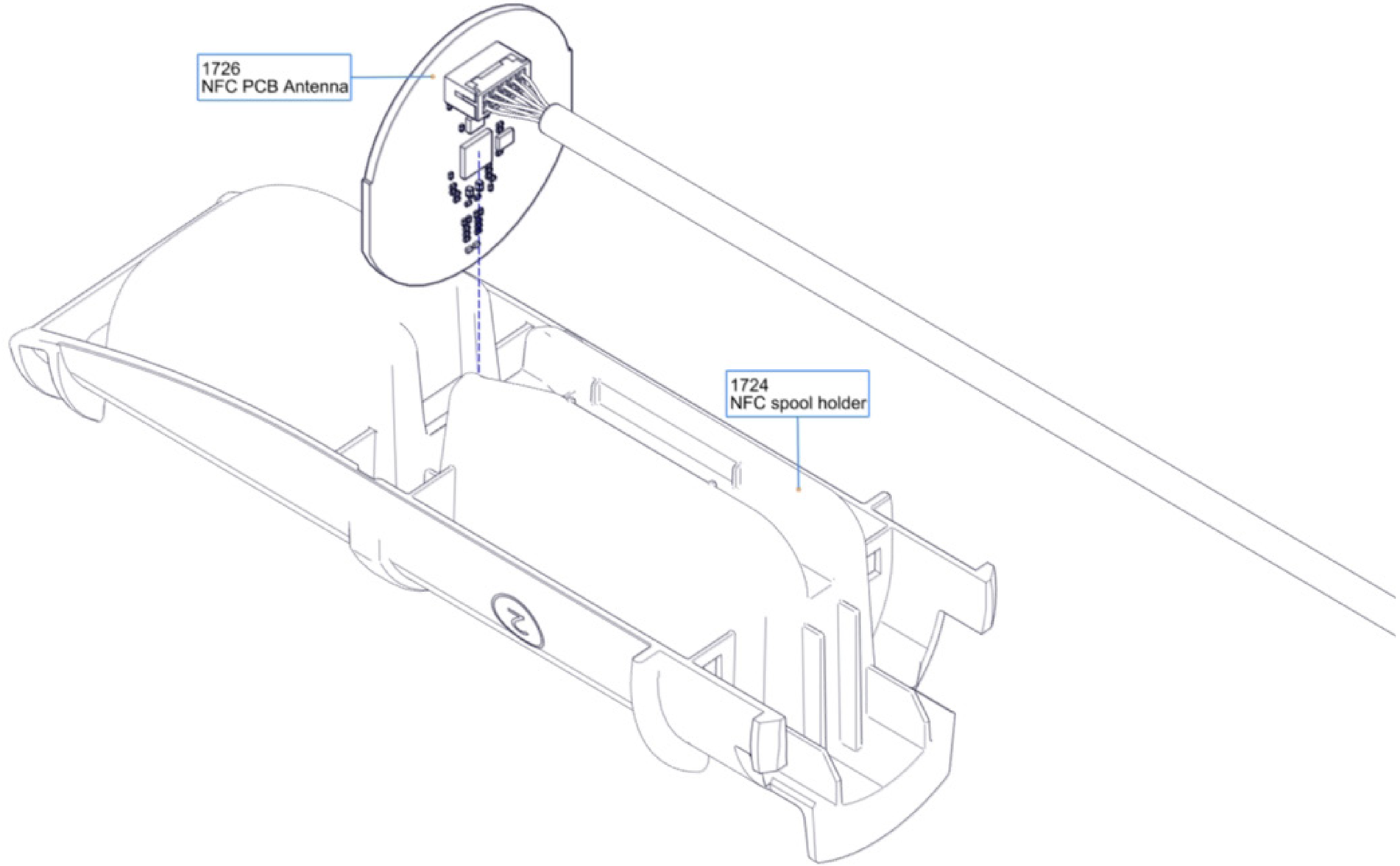
1726
NFC PCB Antenna
1724
NFC spool holder

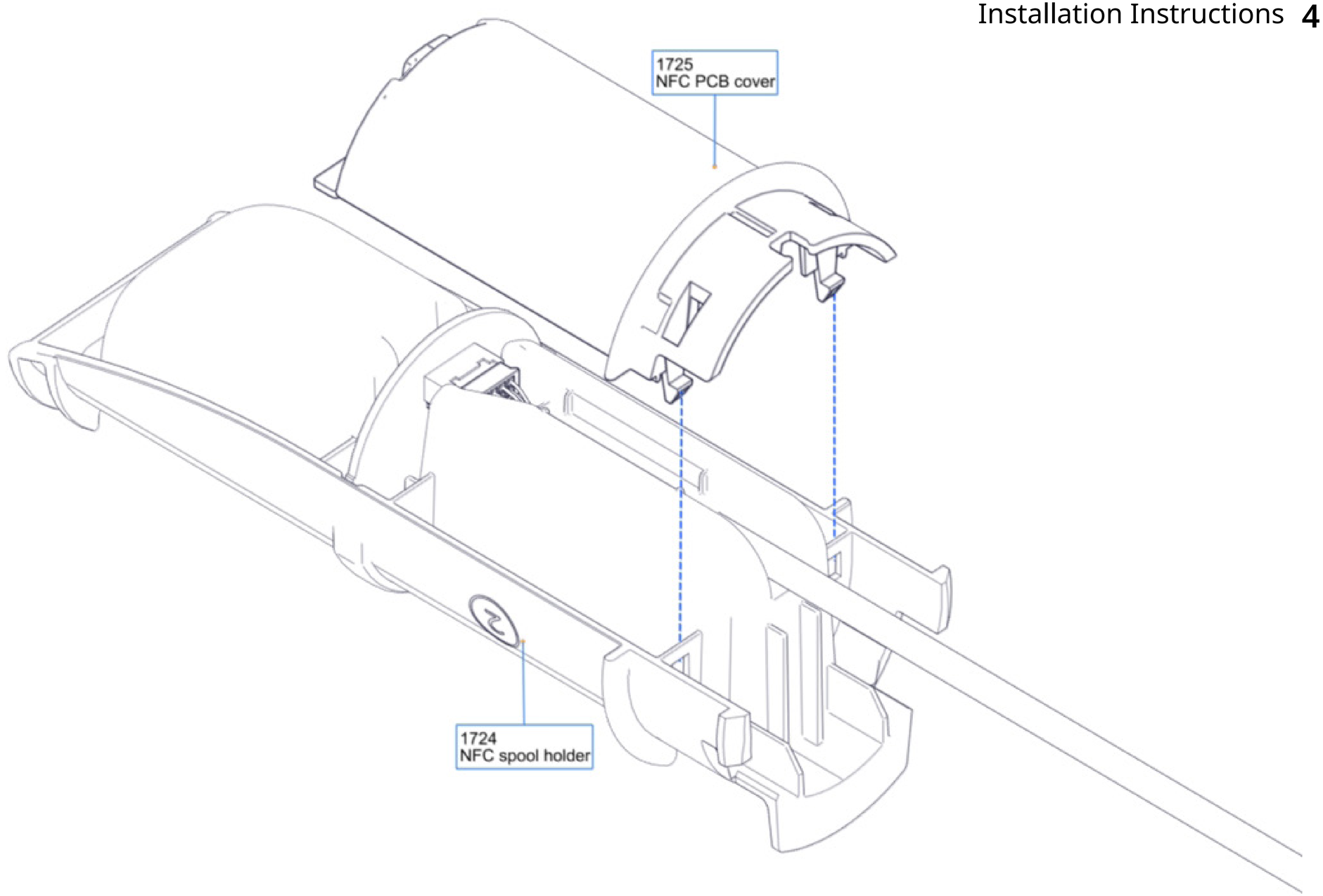
1725
NFC PCB cover
1724
NFC spool holder

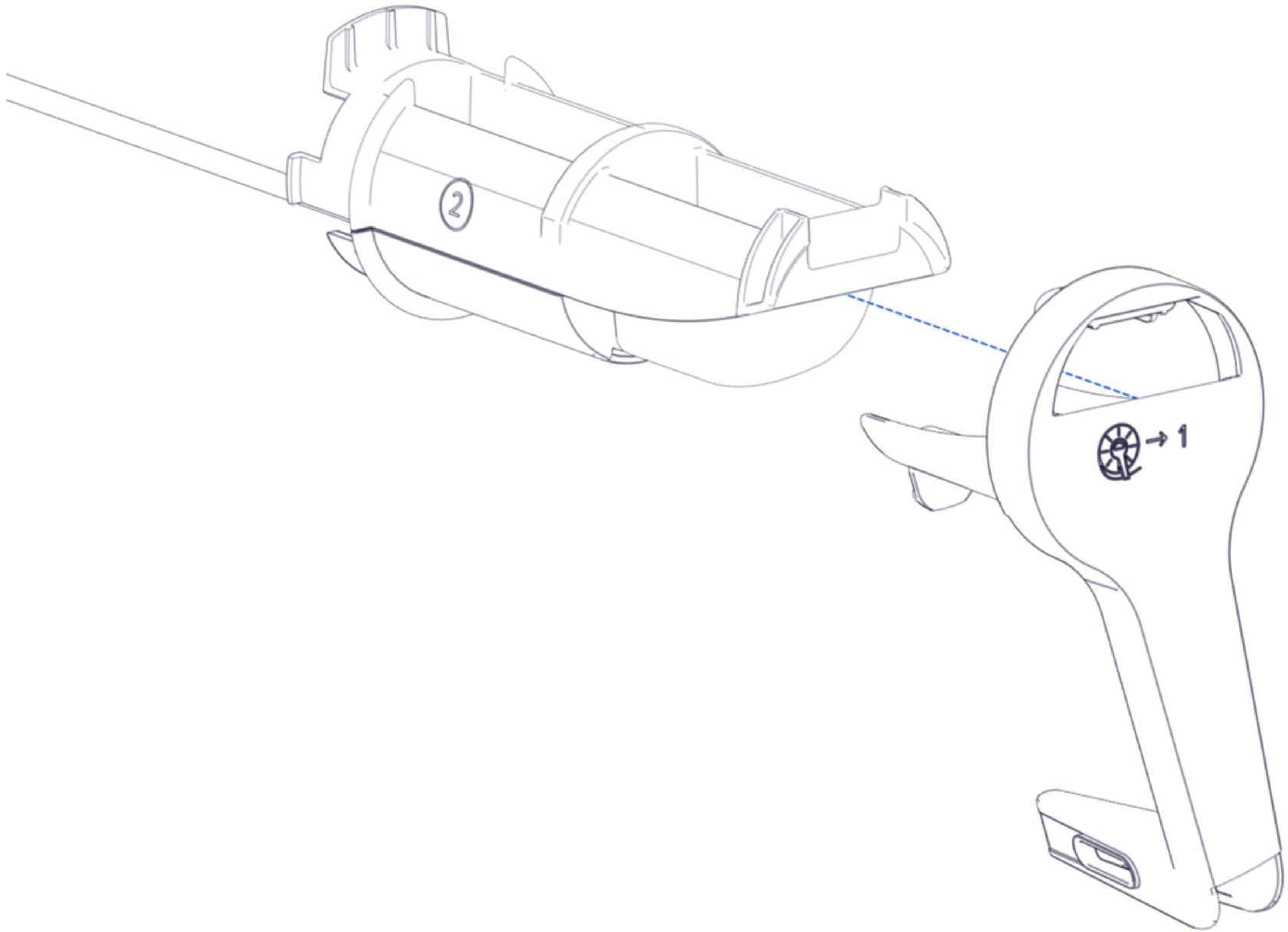
2
1

FCC and ISED Declarations

This "RFID Reader 1726-A" unit is certified as module as FCC ID: 2AL8M-1726A, IC: 23486-1726A

La présente unité « RFID Reader 1726-A » est certifiée en tant que le module FCC ID: 2AL8M-1726A, IC: 23486-1726A

IMPORTANT NOTE : **Compliance Statement (part 15.19) This device complies with part 15 of the FCC Rules and to RSS of Industry Canada. Operation is subject to the following two conditions: (1) this device may not cause harmful interference, and (2) this device must accept any interference received, including interference that may cause undesired operation.**

Le présent appareil est conforme aux CNR d'Industrie Canada applicables aux appareils radio exempts de licence. L'exploitation est autorisée aux deux conditions suivantes : (1) l'appareil ne doit pas produire de brouillage, et (2) l'utilisateur de l'appareil doit accepter tout brouillage radioélectrique subi, même si le brouillage est susceptible d'en compromettre le fonctionnement.

Warning (Part 15.21)

Changes or modifications not expressly approved by the party responsible for compliance could void the user's authority to operate the equipment.

Information to the User (Part 15.105 (b))

Note: This equipment has been tested and found to comply with the limits for a Class B digital device, pursuant to part 15 of the FCC Rules. These limits are designed to provide reasonable protection against harmful interference in a residential installation.

This equipment generates, uses, and can radiate radio frequency energy and, if not installed and used in accordance with the instructions, may cause harmful interference to radio communications. However, there is no guarantee that interference will not occur in a particular installation. If this equipment does cause harmful interference to radio or television reception, which can be determined by turning the equipment off and on, the user is encouraged to try to correct the interference by one or more of the following measures:

- Reorient or relocate the receiving antenna.
- Increase the separation between the equipment and receiver.
- Connect the equipment into an outlet on a circuit different from that to which the receiver is connected.
-Consult the dealer or an experienced radio/TV technician for help.

This Class B digital apparatus complies with Canadian ICES-003.

Cet appareil numérique de Classe B est conforme à la norme Canadienne ICES-003.

FCC and ISED Radiation Exposure Statement

To comply with FCC and Industry Canada RF radiation exposure limits for general population, the antenna(s) used for this transmitter must be installed such that a minimum separation distance of 20 cm is always maintained between the radiator (antenna) and all persons and must not be co-located or operating in conjunction with any other antenna or transmitter.

Pour se conformer aux limites d'exposition aux rayonnements FCC et Industrie Canada pour la population générale, les antennes utilisées pour cet émetteur doivent être installées de telle sorte qu'une distance de séparation minimale de 20 cm est toujours maintenue entre le radiateur (antenne) et toutes les personnes et ne doit pas être colocalisé ou fonctionner conjointement avec toute autre antenne ou émetteur.

End-Product Labelling

This device is authorized only for use in the 3D printers of Ultimaker. The end-product must be labelled in visible area with the following: "Contains FCC ID: 2AL8M-1726A, IC: 23486-1726A"

Le présent appareil ne peut être incorporé que dans les imprimantes 3D du producteur Ultimaker.Le produit final doit être étiqueté dans la zone visible avec ce qui suit : "Contient FCC ID: 2AL8M-1726A, IC: 23486-1726A"

Ultimaker