SAR Test Report

Report No.: AGC00408210105FH01

FCC ID	:	2AL95-M6
APPLICATION PURPOSE	:	Original Equipment
PRODUCT DESIGNATION	:	Feature phone
BRAND NAME	:	AGM
MODEL NAME	:	M6, M6 SE, M6 PRO
APPLICANT	:	AGM Group Limited
DATE OF ISSUE	:	Jun. 23,2021
STANDARD(S)	:	IEEE Std. 1528:2013 FCC 47 CFR Part 2§2.1093:2013 IEEE Std C95.1 ™-2005 IEC 62209-1: 2016
REPORT VERSION	:	V1.0

Attestation of Global Compliance(Shenzhen) Co., Ltd.

Any report having not been signed by authorized approver, or having been altered without authorization, or having not been stamped by the "Dedicated Testing/Inspection Stamp" is deemed to be invalid. Copying or excerpting portion of, or altering the content of the report is not permitted without the written authorization of AGC. The test results presented in the report apply only to the tested sample. Any objections to report issued by AGC should be submitted to AGC within 15days after the issuance of the test report. Further enquiry of validity or verification of the test report should be addressed to AGC by agc@agc-cert.com.

Attestation of Global Compliance(Shenzhen)Co., Ltd
Attestation of Global Compliance(Shenzhen)Std & Tech Co., Ltd
Tel: +86-755 2523 4088 E-mail: agc@agc-cert.com Web: http://cn.agc-cert.com/

Report Revise Record

Report Version	Revise Time	Issued Date	Valid Version	Notes
V1.0	/	Jun. 23,2021	Valid	Initial Release

Any report having not been signed by authorized approver, or having been altered without authorization, or having not been stamped by the "Dedicated Testing/Inspection Stamp" is deemed to be invalid. Copying or excerpting portion of, or altering the content of the report is not permitted without the written authorization of AGC. The test results presented in the report apply only to the tested sample. Any objections to report issued by AGC should be submitted to AGC within 15days after the issuance of the test report. Further enquiry of validity or verification of the test report should be addressed to AGC by agc@agc-cert.com.

Attestation of Global Compliance(Shenzhen)Co., Ltd
Attestation of Global Compliance(Shenzhen)Std & Tech Co., Ltd
Tel: +86-755 2523 4088 E-mail: agc@agc-cert.com Web: http://cn.agc-cert.com/

Test Report

Applicant Name	AGM Group Limited
Applicant Address	Level 5, Development Bank of Samoa Building, Beach Road, Apia, Samoa
Manufacturer Name	Shenzhen AIJIEMO Technology Company Limited
Manufacturer Address	1st Floor 101 and 2nd Floor 201, Building A2, Huafeng Century Technology Park, Nanchang Community, Xixiang, Baoan District, Shenzhen, China
Factory Name	Shenzhen AIJIEMO Technology Company Limited
Factory Address	1st Floor 101 and 2nd Floor 201, Building A2, Huafeng Century Technology Park, Nanchang Community, Xixiang, Baoan District, Shenzhen, China
Product Designation	Feature phone
Brand Name	AGM
Model Name	M6, M6 SE, M6 PRO
Different Description	All the same except model names.
EUT Voltage	DC3.7V by battery
Applicable Standard	IEEE Std. 1528:2013 FCC 47 CFR Part 2§2.1093:2013 IEEE Std C95.1 ™-2005 IEC 62209-1: 2016
Test Date	Mar. 24,2021 to Mar. 31,2021
Report Template	AGCRT-US-4G/SAR (2021-04-20)

Note: The results of testing in this report apply to the product/system which was tested only.

Prepared By

Thea Huang (Project Engineer) Mar. 31,2021

Reviewed By

Angela Li (Reviewer) Jun. 23,2021

Approved By

Forrest Lei (Authorized Officer) Jun. 23,2021

Any report having not been signed by authorized approver, or having been altered without authorization, or having not been stamped by the "Dedicated Testing/Inspection Stamp" is deemed to be invalid. Copying or excerpting portion of, or altering the content of the report is not permitted without the written authorization of AGC. The test results presented in the report apply only to the tested sample. Any objections to report issued by AGC should be submitted to AGC within 15days after the issuance of the test report. Further enquiry of validity or verification of the test report should be addressed to AGC by agc@agc-cert.com.

Attestation of Global Compliance(Shenzhen)Co., Ltd
Attestation of Global Compliance(Shenzhen)Std & Tech Co., Ltd
Tel: +86-755 2523 4088 E-mail: agc@agc-cert.com Web: http://cn.agc-cert.com/

TABLE OF CONTENTS

1. SUMMARY OF MAXIMUM SAR VALUE 5

2. GENERAL INFORMATION 6

2.1. EUT DESCRIPTION 6

3. SAR MEASUREMENT SYSTEM 8

3.1. THE SATIMO SYSTEM USED FOR PERFORMING COMPLIANCE TESTS CONSISTS OF FOLLOWING ITEMS 8
3.2. COMOSAR E-FIELD PROBE 9
3.3. ROBOT 9
3.4. VIDEO POSITIONING SYSTEM 10
3.5. DEVICE HOLDER 10
3.6. SAM TWIN PHANTOM 11

4. SAR MEASUREMENT PROCEDURE 12

4.1. SPECIFIC ABSORPTION RATE (SAR) 12
4.2. SAR MEASUREMENT PROCEDURE 13
4.3. RF EXPOSURE CONDITIONS 15

5. TISSUE SIMULATING LIQUID 16

5.1. THE COMPOSITION OF THE TISSUE SIMULATING LIQUID 16
5.2. TISSUE DIELECTRIC PARAMETERS FOR HEAD AND BODY PHANTOMS 17
5.3. TISSUE CALIBRATION RESULT 18

6. SAR SYSTEM CHECK PROCEDURE 20

6.1. SAR SYSTEM CHECK PROCEDURES 20
6.2. SAR SYSTEM CHECK 21

7. EUT TEST POSITION 23

7.1. DEFINE TWO IMAGINARY LINES ON THE HANDSET 23
7.2. CHEEK POSITION 24
7.3. TILT POSITION 24
7.4. BODY WORN POSITION 25

8. SAR EXPOSURE LIMITS 26

9. TEST FACILITY 27

10. TEST EQUIPMENT LIST 28

11. MEASUREMENT UNCERTAINTY 29

12. CONDUCTED POWER MEASUREMENT 32

13. TEST RESULTS 54

13.1. SAR TEST RESULTS SUMMARY 54

APPENDIX A. SAR SYSTEM CHECK DATA 76

APPENDIX B. SAR MEASUREMENT DATA 86

APPENDIX C. TEST SETUP PHOTOGRAPHS 132

APPENDIX D. CALIBRATION DATA 140

Any report having not been signed by authorized approver, or having been altered without authorization, or having not been stamped by the "Dedicated Testing/Inspection Stamp" is deemed to be invalid. Copying or excerpting portion of, or altering the content of the report is not permitted without the written authorization of AGC. The test results presented in the report apply only to the tested sample. Any objections to report issued by AGC should be submitted to AGC within 15days after the issuance of the test report. Further enquiry of validity or verification of the test report should be addressed to AGC by agc@agc-cert.com.

1. SUMMARY OF MAXIMUM SAR VALUE

The maximum results of Specific Absorption Rate (SAR) found during testing for EUT are as follows:

Frequency Band	Highest Reported 1g-SAR(W/kg)		SAR Test Limit (W/kg)
	Head	Body-worn ((with 5mm separation)	
GSM 850	0.650	0.789	1.6
PCS 1900	0.340	0.611	
UMTS Band II	0.664	1.400	
UMTS Band V	0.747	0.759	
LTE Band 5	0.763	0.778	
LTE Band 38	0.138	1.378	
LTE Band 40-Lower Side	0.078	0.656	
LTE Band 40-Upper Side	0.088	0.736	
LTE Band 41	0.111	1.135	
Simultaneous Reported SAR	1.595		
SAR Test Result	PASS		

This device is compliance with Specific Absorption Rate (SAR) for general population/uncontrolled exposure limits (1.6W/kg) specified in IEEE Std. 1528:2013; FCC 47CFR § 2.1093; IEEE/ANSI C95.1:2005 and the following specific FCC Test Procedures:

- KDB 447498 D01 General RF Exposure Guidance v06
- KDB 648474 D04 Handset SAR v01r03
- KDB 865664 D01 SAR Measurement 100MHz to 6GHz v01r04
- KDB 941225 D01 3G SAR Procedures v03r01
- KDB 941225 D05 SAR for LTE Devices v02r05

Any report having not been signed by authorized approver, or having been altered without authorization, or having not been stamped by the "Dedicated Testing/Inspection Stamp" is deemed to be invalid. Copying or excerpting portion of, or altering the content of the report is not permitted without the written authorization of AGC. The test results presented in the report apply only to the tested sample. Any objections to report issued by AGC should be submitted to AGC within 15days after the issuance of the test report. Further enquiry of validity or verification of the test report should be addressed to AGC by agc@agc-cert.com.

2. GENERAL INFORMATION

2.1. EUT Description

General Information	
Product Designation	Feature phone
Test Model	M6
Hardware Version	CT06_MB_V1.1
Software Version	Q11_CT06_AJM01_Y01_V0.2_01_08_2021
Device Category	Portable
RF Exposure Environment	Uncontrolled
Antenna Type	Internal
GSM and GPRS& EGPRS	
Support Band	☒GSM 850 ☒PCS 1900 (U.S. Bands) ☒GSM 900 ☒DCS 1800 (Non-U.S. Bands)
GPRS & EGPRS Type	Class B
GPRS & EGPRS Class	Class 12(1Tx+4Rx, 2Tx+3Rx, 3Tx+2Rx, 4Tx+1Rx)
TX Frequency Range	GSM 850: 820-850MHz; PCS 1900: 1850-1910MHz;
RX Frequency Range	GSM 850: 869~894MHz; PCS 1900: 1930~1990MHz
Release Version	R99
Type of modulation	GMSK for GSM/GPRS; GMSK & 8-PSK for EGPRS
Antenna Gain	GSM850: 1.25dBi; PCS1900: 1.33dBi
Max. Average Power	GSM850: 33.05dBm; PCS1900: 29.53dBm
WCDMA	
Support Band	☒UMTS FDD Band II ☒UMTS FDD Band V (U.S. Bands) ☐UMTS FDD Band I ☒UMTS FDD Band VIII (Non-U.S. Bands)
HS Type	HSPA(HSUPA/HSDPA)
TX Frequency Range	FDD Band II: 1850-1910MHz; FDD Band V: 824-849MHz
RX Frequency Range	FDD Band II: 1930-1990MHz; FDD Band V: 869-894MHz
Release Version	Rel-6
Type of modulation	HSDPA: QPSK/16QAM; HSUPA: BPSK; WCDMA: QPSK
Antenna Gain	Band II: 1.30dBi; Band V: 1.26dBi
Max. Average Power	Band II: 23.57dBm; Band V: 23.65dBm

Any report having not been signed by authorized approver, or having been altered without authorization, or having not been stamped by the "Dedicated Testing/Inspection Stamp" is deemed to be invalid. Copying or excerpting portion of, or altering the content of the report is not permitted without the written authorization of AGC. The test results presented in the report apply only to the tested sample. Any objections to report issued by AGC should be submitted to AGC within 15days after the issuance of the test report. Further enquiry of validity or verification of the test report should be addressed to AGC by agc@agc-cert.com.

EUT Description(Continue)

LTE	
Support Band	☐FDD Band 2 ☐FDD Band 4 ☒FDD Band 5 ☐FDD Band 7 ☐FDD Band 12 ☐FDD Band 25 ☒TDD Band 38 ☒TDD Band 40 ☒TDD Band 41 (U.S. Bands) ☒FDD Band 1 ☒FDD Band 3 ☒FDD Band 7 ☐FDD Band 8 ☒FDD Band 20 ☐FDD Band 28 ☐TDD Band 38 ☐TDD Band 40 ☐TDD Band 42 ☐FDD Band 43 (Non-U.S. Bands)
TX Frequency Range	Band 5:824-849MHz; Band 38: 2570-2620 MHz; Band 40:2305-2320&2345-2360MHz; Band 41:2496-2690MHz
RX Frequency Range	Band 5:869-894MHz; Band 38: 2570-2620 MHz; Band 40:2305-2320&2345-2360MHz; Band 41:2496-2690MHz
Release Version	Rel-8
Type of modulation	QPSK, 16QAM
Antenna Gain	Band 5: 1.28dBi; Band 38: 1.42dBi; Band 40: 1.22dBi; Band 41: 1.34dBi;
Max. Average Power	Band 5: 23.56dBm; Band 38: 22.42dBm; LTE-Band 40(Lower Side): 23.12dBm; LTE-Band 40 (Upper Side): 23.83dBm; Band 41: 23.75dBm
Bluetooth	
Bluetooth Version	☐V2.0 ☐V2.1 ☐V2.1+EDR ☐V3.0 ☐V3.0+HS ☐V4.0 ☒V5.1
Operation Frequency	2402~2480MHz
Type of modulation	☒GFSK ☒Π/4-DQPSK ☒8-DPSK
Peak Power	6.666dBm
Antenna Gain	0dBi
Accessories	
Battery	Brand name: N/A Model No.: M2500 Voltage and Capacitance: 3.7 V & 2500mAh
Earphone	Brand name: N/A Model No.: N/A

Note:1.CMU200 can measure the average power and Peak power at the same time
2.The sample used for testing is end product.
3. The test sample has no any deviation to the test method of standard mentioned in page 1.

Product	Type ☒ Production unit ☐ Identical Prototype

Any report having not been signed by authorized approver, or having been altered without authorization, or having not been stamped by the "Dedicated Testing/Inspection Stamp" is deemed to be invalid. Copying or excerpting portion of, or altering the content of the report is not permitted without the written authorization of AGC. The test results presented in the report apply only to the tested sample. Any objections to report issued by AGC should be submitted to AGC within 15days after the issuance of the test report. Further enquiry of validity or verification of the test report should be addressed to AGC by agc@agc-cert.com.

3. SAR MEASUREMENT SYSTEM

3.1. The SATIMO system used for performing compliance tests consists of following items

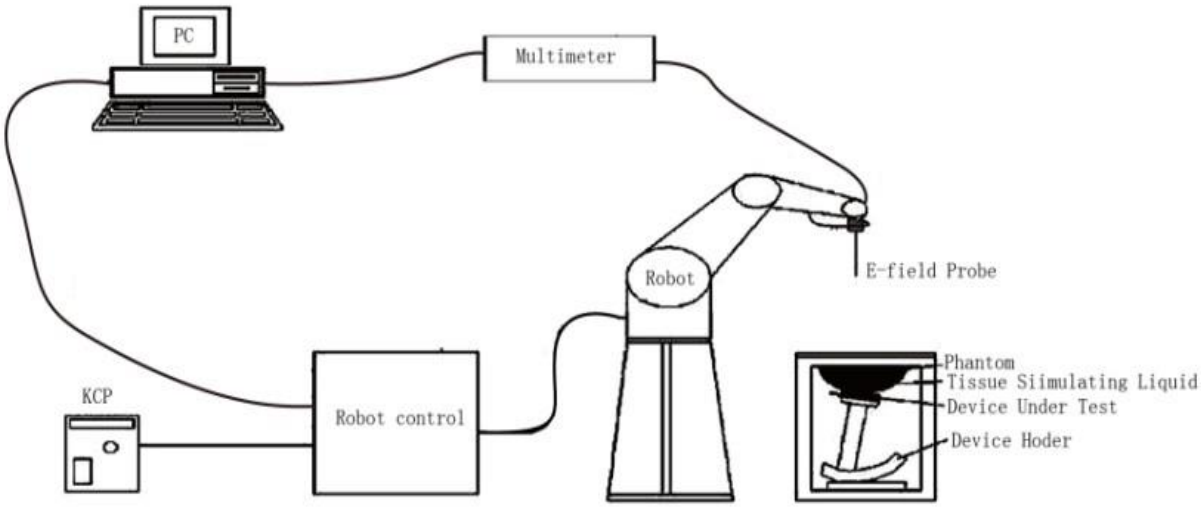

The COMOSAR system for performing compliance tests consists of the following items:

- The PC. It controls most of the bench devices and stores measurement data.A computer running WinXP and the Opensar software.
- The E-Field probe. The probe is a 3-axis system made of 3 distinct dipoles. Each dipole returns a voltage in function of the ambient electric field.
- The Keithley multimeter measures each probe dipole voltages.
- The SAM phantom simulates a human head. The measurement of the electric field is made inside the phantom.
- The liquids simulate the dielectric properties of the human head tissues.
- The network emulator controls the mobile phone under test.
- The validation dipoles are used to measure a reference SAR. They are used to periodically check the bench to make sure that there is no drift of the system characteristics over time.
- The phantom, the device holder and other accessories according to the targeted measurement.

Any report having not been signed by authorized approver, or having been altered without authorization, or having not been stamped by the "Dedicated Testing/Inspection Stamp" is deemed to be invalid. Copying or excerpting portion of, or altering the content of the report is not permitted without the written authorization of AGC. The test results presented in the report apply only to the tested sample. Any objections to report issued by AGC should be submitted to AGC within 15days after the issuance of the test report. Further enquiry of validity or verification of the test report should be addressed to AGC by agc@agc-cert.com.

3.2. COMOSAR E-Field Probe

The SAR measurement is conducted with the dosimetric probe manufactured by SATIMO. The probe is specially designed and calibrated for use in liquid with high permittivity. The dosimetric probe has special calibration in liquid at different frequency. SATIMO conducts the probe calibration in compliance with international and national standards (e.g. IEEE 1528 and relevant KDB files.) The calibration data are in Appendix D.

Isotropic E-Field Probe Specification

Model	SSE5	
Manufacture	MVG	
Identification No.	SN 24/20 EP336	
Frequency	0.7GHz-3GHz Linearity:±0.08dB(0.7GHz-3GHz)	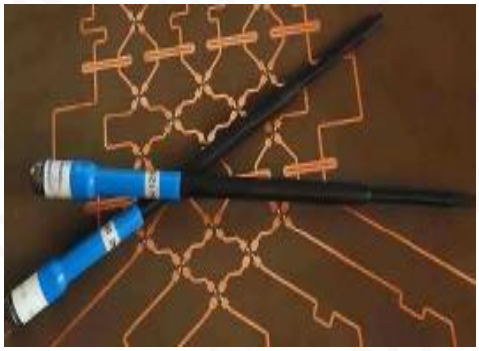
Dynamic Range	0.01W/kg-100W/kg Linearity:±0.08dB	
Dimensions	Overall length:330mm Length of individual dipoles:4.5mm Maximum external diameter:8mm Probe Tip external diameter:5mm Distance between dipoles/ probe extremity:2.7mm	
Application	High precision dosimetric measurements in any exposure scenario (e.g., very strong gradient fields). Only probe which enables compliance testing for frequencies up to 3 GHz with precisin of better 30%.	

3.3. Robot

The COMOSAR system uses the KUKA robot from SATIMO SA (France).For the 6-axis controller COMOSAR system, the KUKA robot controller version from SATIMO is used.
The XL robot series have many features that are important for our application:
- High precision (repeatability 0.02 mm)
- High reliability (industrial design)
- Jerk-free straight movements
- Low ELF interference (the closed metallic construction shields against motor control fields)
- 6-axis controller

Any report having not been signed by authorized approver, or having been altered without authorization, or having not been stamped by the "Dedicated Testing/Inspection Stamp" is deemed to be invalid. Copying or excerpting portion of, or altering the content of the report is not permitted without the written authorization of AGC. The test results presented in the report apply only to the tested sample. Any objections to report issued by AGC should be submitted to AGC within 15days after the issuance of the test report. Further enquiry of validity or verification of the test report should be addressed to AGC by agc@agc-cert.com.

3.4. Video Positioning System

The video positioning system is used in OpenSAR to check the probe. Which is composed of a camera, LED, mirror and mechanical parts.The camera is piloted by the main computer with firewire link. During the process, the actual position of the probe tip with respect to the robot arm is measured, as well as the probe length and the horizontal probe offset. The software then corrects all movements, such that the robot coordinates are valid for the probe tip. The repeatability of this process is better than 0.1 mm. If a position has been taught with an aligned probe, the same position will be reached with another aligned probe within 0.1 mm, even if the other probe has different dimensions. During probe rotations, the probe tip will keep its actual position.	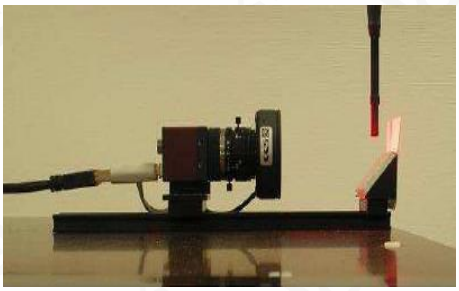

3.5. Device Holder

The COMOSAR device holder is designed to cope with different positions given in the standard. It has two scales for the device rotation (with respect to the body axis) and the device inclination (with respect to the line between the ear reference points). The rotation center for both scales is the ear reference point (EPR). Thus the device needs no repositioning when changing the angles. The COMOSAR device holder has been made out of low-loss POM material having the following dielectric parameters: relative permittivity εr =3 and loss tangent δ = 0.02. The amount of dielectric material has been reduced in the closest vicinity of the device, since measurements have suggested that the influence of the clamp on the test results could thus be lowered.	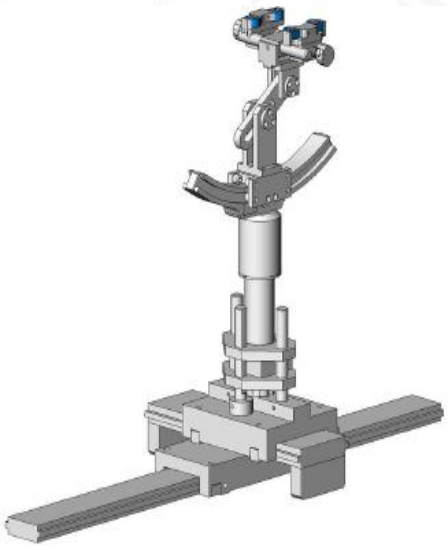

Any report having not been signed by authorized approver, or having been altered without authorization, or having not been stamped by the "Dedicated Testing/Inspection Stamp" is deemed to be invalid. Copying or excerpting portion of, or altering the content of the report is not permitted without the written authorization of AGC. The test results presented in the report apply only to the tested sample. Any objections to report issued by AGC should be submitted to AGC within 15days after the issuance of the test report. Further enquiry of validity or verification of the test report should be addressed to AGC by agc@agc-cert.com.

3.6. SAM Twin Phantom

The SAM twin phantom is a fiberglass shell phantom with 2mm shell thickness (except the ear region where shell thickness increases to 6mm). It has three measurement areas: □ Left head □ Right head □ Flat phantom	

The bottom plate contains three pair of bolts for locking the device holder. The device holder positions are adjusted to the standard measurement positions in the three sections. A white cover is provided to tap the phantom during off-periods to prevent water evaporation and changes in the liquid parameters. On the phantom top, three reference markers are provided to identify the phantom position with respect to the robot.

Any report having not been signed by authorized approver, or having been altered without authorization, or having not been stamped by the "Dedicated Testing/Inspection Stamp" is deemed to be invalid. Copying or excerpting portion of, or altering the content of the report is not permitted without the written authorization of AGC. The test results presented in the report apply only to the tested sample. Any objections to report issued by AGC should be submitted to AGC within 15days after the issuance of the test report. Further enquiry of validity or verification of the test report should be addressed to AGC by agc@agc-cert.com.

4. SAR MEASUREMENT PROCEDURE

4.1. Specific Absorption Rate (SAR)

SAR is related to the rate at which energy is absorbed per unit mass in object exposed to a radio field. The SAR distribution in a biological body is complicated and is usually carried out by experimental techniques or numerical modeling. The standard recommends limits for two tiers of groups, occupational/controlled and occupational/uncontrolled, based on a person's awareness and ability to exercise control over his or her exposure. In general, occupational/controlled exposure limits are higher than the limits for general population/uncontrolled.

The SAR definition is the time derivative (rate) of the incremental energy (dW) absorbed by (dissipated in) an incremental mass (dm) contained in a volume element(dv) of given mass density (ρ). The equation description is as below:

$$\mathrm{SAR} = \frac{\mathrm{d}}{\mathrm{d}t}\left(\frac{\mathrm{d}W}{\mathrm{d}m}\right) = \frac{\mathrm{d}}{\mathrm{d}t}\left(\frac{\mathrm{d}W}{\rho \mathrm{d}V}\right)$$

SAR is expressed in units of Watts per kilogram (W/kg)
SAR can be obtained using either of the following equations:

$$\mathrm{SAR} = \frac{\sigma E^2}{\rho}$$

$$\mathrm{SAR} = c_h \left.\frac{\mathrm{d}T}{\mathrm{d}t}\right|_{t=0}$$

Where

SAR	is the specific absorption rate in watts per kilogram;
E	is the r.m.s. value of the electric field strength in the tissue in volts per meter;
σ	is the conductivity of the tissue in siemens per metre;
ρ	is the density of the tissue in kilograms per cubic metre;
c_h	is the heat capacity of the tissue in joules per kilogram and Kelvin;
$\frac{\mathrm{dT}}{\mathrm{dt}} \mid \mathrm{t} = 0$	is the initial time derivative of temperature in the tissue in kelvins per second

Any report having not been signed by authorized approver, or having been altered without authorization, or having not been stamped by the "Dedicated Testing/Inspection Stamp" is deemed to be invalid. Copying or excerpting portion of, or altering the content of the report is not permitted without the written authorization of AGC. The test results presented in the report apply only to the tested sample. Any objections to report issued by AGC should be submitted to AGC within 15days after the issuance of the test report. Further enquiry of validity or verification of the test report should be addressed to AGC by agc@agc-cert.com.

4.2. SAR Measurement Procedure

Step 1: Power Reference Measurement

The Power Reference Measurement and Power Drift Measurement are for monitoring the power drift of the device under test in the batch process. The minimum distance of probe sensors to surface is 2.7mm This distance cannot be smaller than the distance os sensor calibration points to probe tip as `defined in the probe properties,

Step 2: Area Scan

The Area Scan is used as a fast scan in two dimensions to find the area of high field values, before doing a fine measurement around the hot spot. The sophisticated interpolation routines implemented in SATIMO software can find the maximum locations even in relatively coarse grids. When an Area Scan has measured all reachable points, it computes the field maximal found in the scanned area, within a range of the global maximum. The range (in db) is specified in the standards for compliance testing. For example, a 2db range is required in IEEE Standard 1528 and IEC62209 standards, whereby 3db is a requirement when compliance is assessed in accordance with the ARIB standard (Japan) If one Zoom Scan follows the Area Scan, then only the absolute maximum will be taken as reference. For cases where multiple maximum are detected, the number of Zoom Scan has to be increased accordingly.

Area Scan Parameters extracted from KDB 865664 D01 SAR Measurement 100MHz to 6GHz

	≤ 3 GHz	> 3 GHz
Maximum distance from closest measurement point (geometric center of probe sensors) to phantom surface	5 ± 1 mm	½·δ·ln(2) ± 0.5 mm
Maximum probe angle from probe axis to phantom surface normal at the measurement location	30° ± 1°	20° ± 1°
Maximum area scan spatial resolution: Δx_{Area}, Δy_{Area}	≤ 2 GHz: ≤ 15 mm 2 – 3 GHz: ≤ 12 mm	3 – 4 GHz: ≤ 12 mm 4 – 6 GHz: ≤ 10 mm
	When the x or y dimension of the test device, in the measurement plane orientation, is smaller than the above, the measurement resolution must be ≤ the corresponding x or y dimension of the test device with at least one measurement point on the test device.	

Step 3: Zoom Scan

Zoom Scan are used to assess the peak spatial SAR value within a cubic average volume containing 1g abd 10g of simulated tissue. The Zoom Scan measures points(refer to table below) within a cube whose base faces are centered on the maxima found in a preceding area scan job within the same procedure. When the measurement is done, the Zoom Scan evaluates the averaged SAR for 1g and 10g and displays these values next to the job's label.

Any report having not been signed by authorized approver, or having been altered without authorization, or having not been stamped by the "Dedicated Testing/Inspection Stamp" is deemed to be invalid. Copying or excerpting portion of, or altering the content of the report is not permitted without the written authorization of AGC. The test results presented in the report apply only to the tested sample. Any objections to report issued by AGC should be submitted to AGC within 15days after the issuance of the test report. Further enquiry of validity or verification of the test report should be addressed to AGC by agc@agc-cert.com.

Zoom Scan Parameters extracted from KDB865664 d01 SAR Measurement 100MHz to 6GHz

Maximum zoom scan spatial resolution: Δx_{Zoom}, Δy_{Zoom}			≤ 2 GHz: ≤ 8 mm 2 – 3 GHz: ≤ 5 mm*	3 – 4 GHz: ≤ 5 mm* 4 – 6 GHz: ≤ 4 mm*
Maximum zoom scan spatial resolution, normal to phantom surface	uniform grid: $\Delta z_{Zoom}(n)$		≤ 5 mm	3 – 4 GHz: ≤ 4 mm 4 – 5 GHz: ≤ 3 mm 5 – 6 GHz: ≤ 2 mm
	graded grid	$\Delta z_{Zoom}(1)$: between 1st two points closest to phantom surface	≤ 4 mm	3 – 4 GHz: ≤ 3 mm 4 – 5 GHz: ≤ 2.5 mm 5 – 6 GHz: ≤ 2 mm
		$\Delta z_{Zoom}(n>1)$: between subsequent points	$\leq 1.5 \cdot \Delta z_{Zoom}(n-1)$	
Minimum zoom scan volume	x, y, z		≥ 30 mm	3 – 4 GHz: ≥ 28 mm 4 – 5 GHz: ≥ 25 mm 5 – 6 GHz: ≥ 22 mm

Note: δ is the penetration depth of a plane-wave at normal incidence to the tissue medium; see draft standard IEEE P1528-2011 for details.

* When zoom scan is required and the *reported* SAR from the *area scan based 1-g SAR estimation* procedures of KDB 447498 is ≤ 1.4 W/kg, ≤ 8 mm, ≤ 7 mm and ≤ 5 mm zoom scan resolution may be applied, respectively, for 2 GHz to 3 GHz, 3 GHz to 4 GHz and 4 GHz to 6 GHz.

Step 4: Power Drift Measurement

The Power Drift Measurement measures the field at the same location as the most recent power reference measurement within the same procedure, and with the same settings. The Power Drift Measurement gives the field difference in dB from the reading conducted within the same settings. This allows a user to monitor the power drift of the device under test within a batch process. The measurement procedure is the same as Step 1.

Any report having not been signed by authorized approver, or having been altered without authorization, or having not been stamped by the "Dedicated Testing/Inspection Stamp" is deemed to be invalid. Copying or excerpting portion of, or altering the content of the report is not permitted without the written authorization of AGC. The test results presented in the report apply only to the tested sample. Any objections to report issued by AGC should be submitted to AGC within 15days after the issuance of the test report. Further enquiry of validity or verification of the test report should be addressed to AGC by agc@agc-cert.com.

4.3. RF Exposure Conditions

Test Configuration and setting:

The EUT is a model of GSM Portable Mobile Station (MS). It supports GSM/GPRS/EGPRS, WCDMA/HSPA, LTE and BT.

For WWAN SAR testing, the device was controlled by using a base station emulator. Communication between the device and the emulator were established by air link. The distance between the EUT and the antenna is larger than 50cm, and the output power radiated from the emulator antenna is at least 30db smaller than the output power of EUT.

Antenna Location: (the back view)

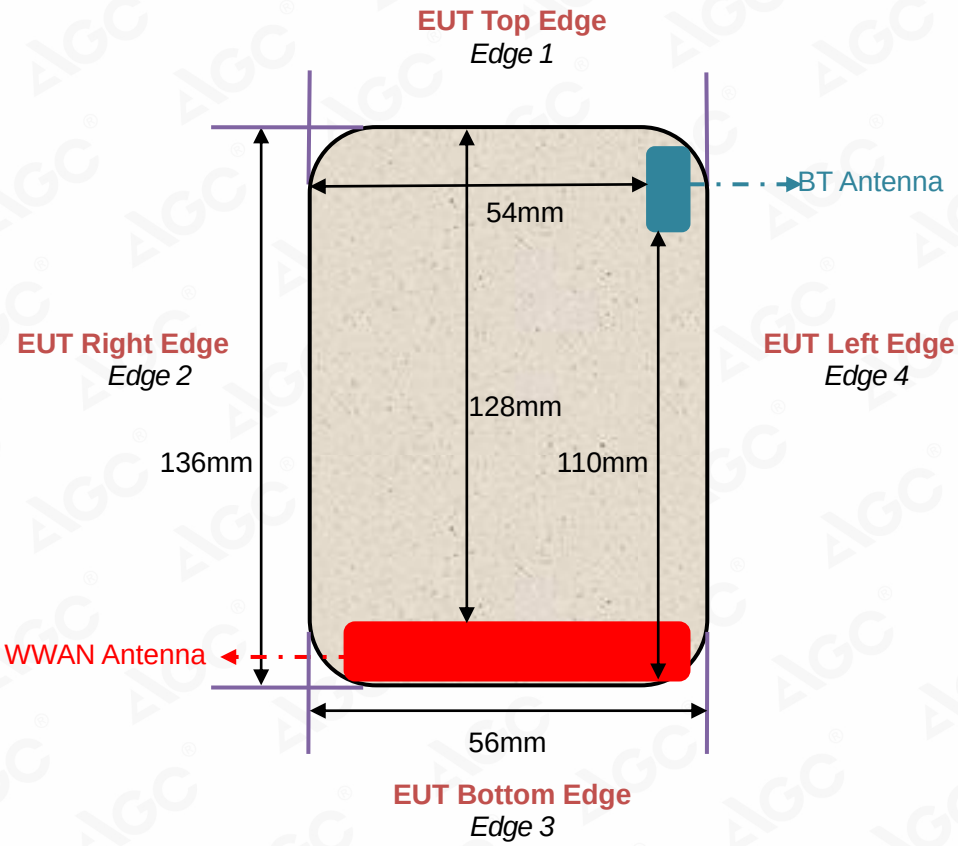

Any report having not been signed by authorized approver, or having been altered without authorization, or having not been stamped by the "Dedicated Testing/Inspection Stamp" is deemed to be invalid. Copying or excerpting portion of, or altering the content of the report is not permitted without the written authorization of AGC. The test results presented in the report apply only to the tested sample. Any objections to report issued by AGC should be submitted to AGC within 15days after the issuance of the test report. Further enquiry of validity or verification of the test report should be addressed to AGC by agc@agc-cert.com.

5. TISSUE SIMULATING LIQUID

For SAR measurement of the field distribution inside the phantom, the phantom must be filled with homogeneous tissue simulating liquid to a depth of at least 15cm. For head SAR testing the liquid height from the ear reference point (ERP) of the phantom to the liquid top surface is larger than 15cm For body SAR testing, the liquid height from the center of the flat phantom to the liquid top surface is larger than 15cm.The nominal dielectric values of the tissue simulating liquids in the phantom and the tolerance of 10% are listed in 6.2

5.1. The composition of the tissue simulating liquid

Ingredient (% Weight) / Frequency (MHz)	Water	Nacl	Polysorbate 20	DGBE	1,2 Propanediol	Triton X-100
835 Head	50.36	1.25	48.39	0.0	0.0	0.0
1900 Head	54.9	0.18	0.0	44.92	0.0	0.0
2300 Head	62.82	0.51	0.0	36.67	0.0	0.0
2600 Head	55.242	0.306	0	44.452	0	0

Any report having not been signed by authorized approver, or having been altered without authorization, or having not been stamped by the "Dedicated Testing/Inspection Stamp" is deemed to be invalid. Copying or excerpting portion of, or altering the content of the report is not permitted without the written authorization of AGC. The test results presented in the report apply only to the tested sample. Any objections to report issued by AGC should be submitted to AGC within 15days after the issuance of the test report. Further enquiry of validity or verification of the test report should be addressed to AGC by agc@agc-cert.com.

5.2. Tissue Dielectric Parameters for Head and Body Phantoms

The head tissue dielectric parameters recommended by the IEC 62209-1 have been incorporated in the following table. The body tissue dielectric parameters recommended by the IEC 62209-2 have been incorporated in the following table.

Target Frequency (MHz)	head		body	
	εr	σ (S/m)	εr	σ (S/m)
300	45.3	0.87	45.3	0.87
450	43.5	0.87	43.5	0.87
750	41.9	0.89	41.9	0.89
835	**41.5**	**0.90**	**41.5**	**0.90**
900	41.5	0.97	41.5	0.97
915	41.5	1.01	41.5	1.01
1450	40.5	1.20	40.5	1.20
1610	40.3	1.29	40.3	1.29
1750	40.1	1.37	40.1	1.37
1800 – 2000	**40.0**	**1.40**	**40.0**	**1.40**
2300	**39.5**	**1.67**	**39.5**	**1.67**
2450	39.2	1.80	39.2	1.80
2600	**39.0**	**1.96**	**39.0**	**1.96**
3000	38.5	2.40	38.5	2.40

(εr = relative permittivity, σ = conductivity and ρ = 1000 kg/m3

Any report having not been signed by authorized approver, or having been altered without authorization, or having not been stamped by the "Dedicated Testing/Inspection Stamp" is deemed to be invalid. Copying or excerpting portion of, or altering the content of the report is not permitted without the written authorization of AGC. The test results presented in the report apply only to the tested sample. Any objections to report issued by AGC should be submitted to AGC within 15days after the issuance of the test report. Further enquiry of validity or verification of the test report should be addressed to AGC by agc@agc-cert.com.

5.3. Tissue Calibration Result

The dielectric parameters of the liquids were verified prior to the SAR evaluation using SATIMO Dielectric Probe Kit and R&S Network Analyzer ZVL6.

Tissue Stimulant Measurement for 835MHz					
	Fr. (MHz)	Dielectric Parameters (±10%)		Tissue Temp [°C]	Test time
		εr 41.5 (37.35-45.65)	δ[s/m] 0.90(0.81-0.99)		
Head	835	41.32	0.92	21.8	Mar. 24,2021
	836.4	40.08	0.94		
	836.6	40.08	0.94		

Tissue Stimulant Measurement for 835MHz					
	Fr. (MHz)	Dielectric Parameters (±10%)		Tissue Temp [°C]	Test time
		εr 41.5 (37.35-45.65)	δ[s/m] 0.90(0.81-0.99)		
Head	835	40.62	0.92	21.2	Mar. 29,2021
	836.5	40.15	0.94		

Tissue Stimulant Measurement for 1900MHz					
	Fr. (MHz)	Dielectric Parameters (±10%)		Tissue Temp [°C]	Test time
		εr40.00(36.00-44.00)	δ[s/m]1.40(1.26-1.54)		
Head	1852.4	42.54	1.35	20.9	Mar. 26,2021
	1880	41.36	1.38		
	1900	39.42	1.42		
	1907.6	38.57	1.45		

Tissue Stimulant Measurement for 2300MHz					
	Fr. (MHz)	Dielectric Parameters (±10%)		Tissue Temp [°C]	Test time
		εr 39.5 (35.55-43.45)	δ[s/m]1.67 (1.503-1.837)		
Head	2300	38.43	1.63	20.7	Mar. 31,2021
	2350	37.58	1.65		

Any report having not been signed by authorized approver, or having been altered without authorization, or having not been stamped by the "Dedicated Testing/Inspection Stamp" is deemed to be invalid. Copying or excerpting portion of, or altering the content of the report is not permitted without the written authorization of AGC. The test results presented in the report apply only to the tested sample. Any objections to report issued by AGC should be submitted to AGC within 15days after the issuance of the test report. Further enquiry of validity or verification of the test report should be addressed to AGC by agc@agc-cert.com.

Tissue Stimulant Measurement for 2600MHz					
	Fr. (MHz)	Dielectric Parameters (±10%)		Tissue Temp [°C]	Test time
		εr39(35.1-42.9)	δ[s/m]1.96(1.764-2.156)		
Head	2506	42.03	1.86	21.0	Mar. 30,2021
	2580	41.26	1.89		
	2593	40.67	1.93		
	2595	39.52	1.95		
	2600	38.63	1.97		
	2610	37.13	1.98		
	2680	36.28	2.01		

Any report having not been signed by authorized approver, or having been altered without authorization, or having not been stamped by the "Dedicated Testing/Inspection Stamp" is deemed to be invalid. Copying or excerpting portion of, or altering the content of the report is not permitted without the written authorization of AGC. The test results presented in the report apply only to the tested sample. Any objections to report issued by AGC should be submitted to AGC within 15days after the issuance of the test report. Further enquiry of validity or verification of the test report should be addressed to AGC by agc@agc-cert.com.

Attestation of Global Compliance(Shenzhen)Co., Ltd
Attestation of Global Compliance(Shenzhen)Std & Tech Co., Ltd
Tel: +86-755 2523 4088 E-mail: agc@agc-cert.com Web: http://cn.agc-cert.com/

6. SAR SYSTEM CHECK PROCEDURE

6.1. SAR System Check Procedures

SAR system check is required to confirm measurement accuracy, according to the tissue dielectric media, probe calibration points and other system operating parameters required for measuring the SAR of a test device. The system verification must be performed for each frequency band and within the valid range of each probe calibration point required for testing the device. The same SAR probe(s) and tissue-equivalent media combinations used with each specific SAR system for system verification must be used for device testing. When multiple probe calibration points are required to cover substantially large transmission bands, independent system verifications are required for each probe calibration point. A system verification must be performed before each series of SAR measurements using the same probe calibration point and tissue-equivalent medium. Additional system verification should be considered according to the conditions of the tissue-equivalent medium and measured tissue dielectric parameters, typically every three to four days when the liquid parameters are remeasured or sooner when marginal liquid parameters are used at the beginning of a series of measurements.

Each SATIMO system is equipped with one or more system check kits. These units, together with the predefined measurement procedures within the SATIMO software, enable the user to conduct the system check and system validation. System kit includes a dipole, and dipole device holder.

The system check verifies that the system operates within its specifications. It's performed daily or before every SAR measurement. The system check uses normal SAR measurement in the flat section of the phantom with a matched dipole at a specified distance. The system check setup is shown as below.

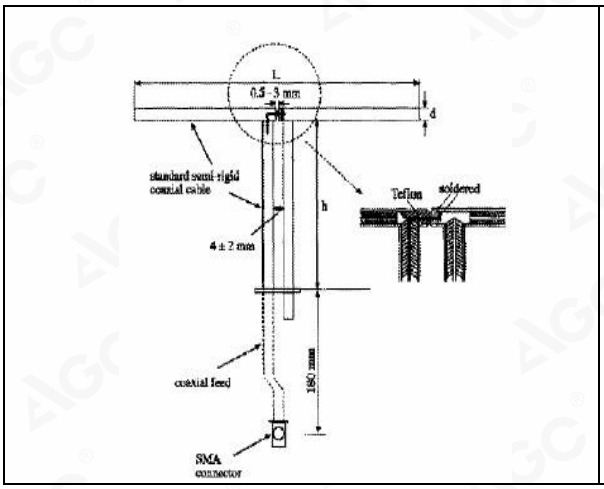

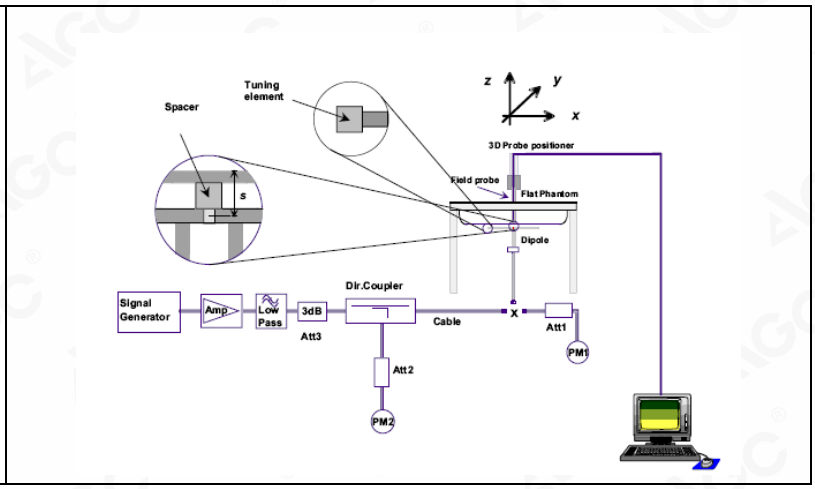

Any report having not been signed by authorized approver, or having been altered without authorization, or having not been stamped by the "Dedicated Testing/Inspection Stamp" is deemed to be invalid. Copying or excerpting portion of, or altering the content of the report is not permitted without the written authorization of AGC. The test results presented in the report apply only to the tested sample. Any objections to report issued by AGC should be submitted to AGC within 15days after the issuance of the test report. Further enquiry of validity or verification of the test report should be addressed to AGC by agc@agc-cert.com.

6.2. SAR System Check

6.2.1. Dipoles

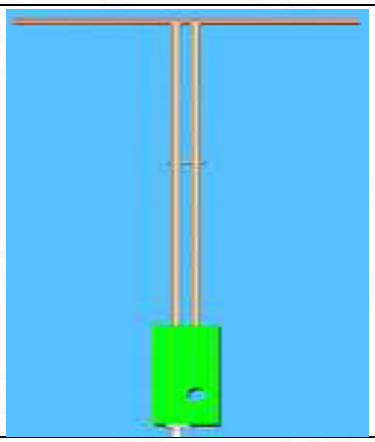

The dipoles used is based on the IEEE-1528 standard, and is complied with mechanical and electrical specifications in line with the requirements of IEEE. the table below provides details for the mechanical and electrical
Specifications for the dipoles.

Frequency	L (mm)	h (mm)	d (mm)
835MHz	161.0	89.8	3.6
1900MHz	68	39.5	3.6
2300MHz	55.5	32.6	3.6
2600MHz	48.5	28.8	3.6

Any report having not been signed by authorized approver, or having been altered without authorization, or having not been stamped by the "Dedicated Testing/Inspection Stamp" is deemed to be invalid. Copying or excerpting portion of, or altering the content of the report is not permitted without the written authorization of AGC. The test results presented in the report apply only to the tested sample. Any objections to report issued by AGC should be submitted to AGC within 15days after the issuance of the test report. Further enquiry of validity or verification of the test report should be addressed to AGC by agc@agc-cert.com.

6.2.2. System Check Result

System Performance Check at 835MHz &1900MHz &2300MHz&2600MHz for Head								
Validation Kit: SN29/15 DIP 0G835-383& SN 46/11 DIP 1G900-187& SN 47/14 DIP 2G300-341 & SN 47/14 DIP 2G600-342								
Frequency [MHz]	Target Value(W/kg)		Reference Result (± 10%)		Tested Value(W/kg)		Tissue Temp. [°C]	Test time
	1g	10g	1g	10g	1g	10g		
835	9.85	6.27	8.865-10.835	5.643-6.897	10.02	6.21	21.8	Mar. 24,2021
835	9.85	6.27	8.865-10.835	5.643-6.897	9.63	6.10	21.2	Mar. 29,2021
1900	40.25	20.50	36.225-44.275	18.45-22.55	40.79	20.50	20.9	Mar. 26,2021
2300	50.97	23.39	45.873-56.067	21.051-25.729	52.87	23.56	20.7	Mar. 31,2021
2600	56.86	24.84	51.174-62.546	22.356-27.324	52.48	23.49	21.0	Mar. 30,2021

Note:
(1) We use a CW signal of 18dBm for system check, and then all SAR value are normalized to 1W forward power. The result must be within ±10% of target value.

Any report having not been signed by authorized approver, or having been altered without authorization, or having not been stamped by the "Dedicated Testing/Inspection Stamp" is deemed to be invalid. Copying or excerpting portion of, or altering the content of the report is not permitted without the written authorization of AGC. The test results presented in the report apply only to the tested sample. Any objections to report issued by AGC should be submitted to AGC within 15days after the issuance of the test report. Further enquiry of validity or verification of the test report should be addressed to AGC by agc@agc-cert.com.

7. EUT TEST POSITION

This EUT was tested in **Right Cheek, Right Tilted, Left Cheek, Left Tilted, Body back, Body front and 4 edges.**

7.1. Define Two Imaginary Lines on the Handset

(1)The vertical centerline passes through two points on the front side of the handset the midpoint of the width wt of the handset at the level of the acoustic output, and the midpoint of the width wb of the handset.

(2)The horizontal line is perpendicular to the vertical centerline and passes through the center of the acoustic output. The horizontal line is also tangential to the face of the handset at point A.

(3)The two lines intersect at point A. Note that for many handsets, point A coincides with the center of the acoustic output; however, the acoustic output may be located elsewhere on the horizontal line. Also note that the vertical centerline is not necessarily to the front face of the handset, especially for clamshell handsets, handsets with flip covers, and other irregularly shaped handsets.

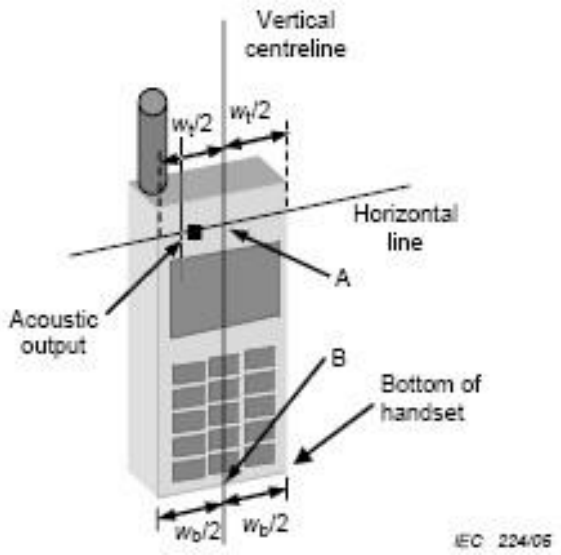

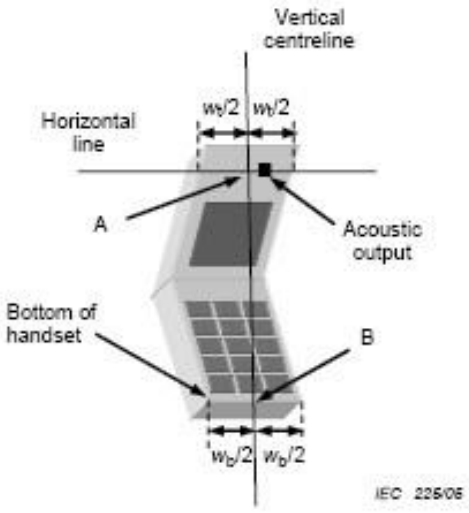

Any report having not been signed by authorized approver, or having been altered without authorization, or having not been stamped by the "Dedicated Testing/Inspection Stamp" is deemed to be invalid. Copying or excerpting portion of, or altering the content of the report is not permitted without the written authorization of AGC. The test results presented in the report apply only to the tested sample. Any objections to report issued by AGC should be submitted to AGC within 15days after the issuance of the test report. Further enquiry of validity or verification of the test report should be addressed to AGC by agc@agc-cert.com.

7.2. Cheek Position

(1) To position the device with the vertical center line of the body of the device and the horizontal line crossing the center picec in a plane parallel to the sagittal plane of the phantom. While maintaining the device in this plane, align the vertical center line with the reference plane containing the ear and mouth reference point (M: Mouth, RE: Right Ear, and LE: Left Ear) and align the center of the ear piece with the line RE-LE.

(2) To move the device towards the phantom with the ear piece aligned with the the line LE-RE until the phone touched the ear. While maintaining the device in the reference plane and maintaining the phone contact with ear, move the bottom of the phone until any point on the front side is in contact with the cheek of the phantom or until contact with the ear is lost

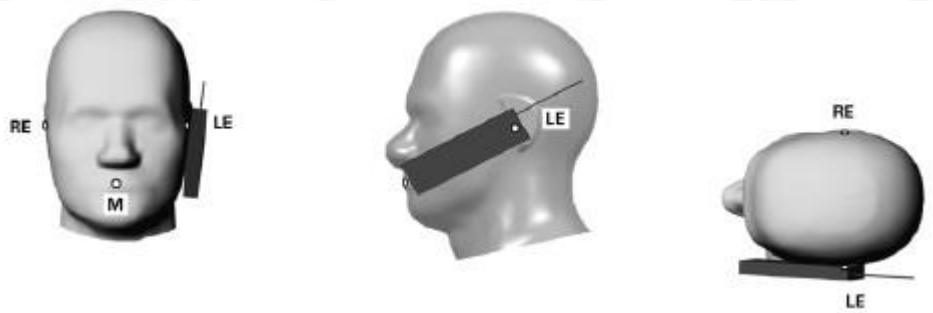

7.3. Tilt Position

(1) To position the device in the “cheek” position described above.

(2) While maintaining the device in the reference plane described above and pivoting against the ear, moves it outward away from the mouth by an angle of 15 degrees or until with the ear is lost.

Any report having not been signed by authorized approver, or having been altered without authorization, or having not been stamped by the “Dedicated Testing/Inspection Stamp” is deemed to be invalid. Copying or excerpting portion of, or altering the content of the report is not permitted without the written authorization of AGC. The test results presented in the report apply only to the tested sample. Any objections to report issued by AGC should be submitted to AGC within 15days after the issuance of the test report. Further enquiry of validity or verification of the test report should be addressed to AGC by agc@agc-cert.com.

Attestation of Global Compliance(Shenzhen)Co., Ltd
Attestation of Global Compliance(Shenzhen)Std & Tech Co., Ltd
Tel: +86-755 2523 4088 E-mail: agc@agc-cert.com Web: http://cn.agc-cert.com/

7.4. Body Worn Position

(1) To position the EUT parallel to the phantom surface.

(2) To adjust the EUT parallel to the flat phantom.

(3) To adjust the distance between the EUT surface and the flat phantom to **5mm.**

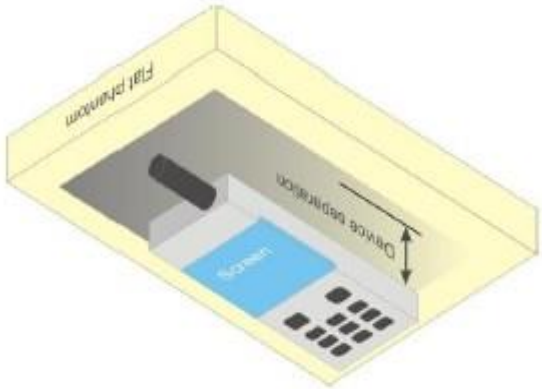

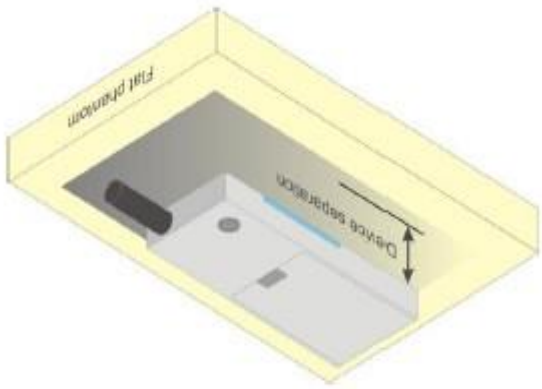

Any report having not been signed by authorized approver, or having been altered without authorization, or having not been stamped by the "Dedicated Testing/Inspection Stamp" is deemed to be invalid. Copying or excerpting portion of, or altering the content of the report is not permitted without the written authorization of AGC. The test results presented in the report apply only to the tested sample. Any objections to report issued by AGC should be submitted to AGC within 15days after the issuance of the test report. Further enquiry of validity or verification of the test report should be addressed to AGC by agc@agc-cert.com.

Attestation of Global Compliance(Shenzhen)Co., Ltd
Attestation of Global Compliance(Shenzhen)Std & Tech Co., Ltd
Tel: +86-755 2523 4088 E-mail: agc@agc-cert.com Web: http://cn.agc-cert.com/

8. SAR EXPOSURE LIMITS

Limits for General Population/Uncontrolled Exposure (W/kg)

Type Exposure	Uncontrolled Environment Limit (W/kg)
Spatial Peak SAR (1g cube tissue for brain or body)	1.60
Spatial Average SAR (Whole body)	0.08
Spatial Peak SAR (Limbs)	4.0

Any report having not been signed by authorized approver, or having been altered without authorization, or having not been stamped by the "Dedicated Testing/Inspection Stamp" is deemed to be invalid. Copying or excerpting portion of, or altering the content of the report is not permitted without the written authorization of AGC. The test results presented in the report apply only to the tested sample. Any objections to report issued by AGC should be submitted to AGC within 15days after the issuance of the test report. Further enquiry of validity or verification of the test report should be addressed to AGC by agc@agc-cert.com.

Attestation of Global Compliance(Shenzhen)Co., Ltd
Attestation of Global Compliance(Shenzhen)Std & Tech Co., Ltd
Tel: +86-755 2523 4088 E-mail: agc@agc-cert.com Web: http://cn.agc-cert.com/

9. TEST FACILITY

Test Site	Attestation of Global Compliance (Shenzhen) Co., Ltd
Location	1-2/F, Building 19, Junfeng Industrial Park, Chongqing Road, Heping Community, Fuhai Street, Bao'an District, Shenzhen, Guangdong, China
Designation Number	CN1259
FCC Test Firm Registration Number	975832
A2LA Cert. No.	5054.02
Description	Attestation of Global Compliance(Shenzhen) Co., Ltd is accredited by A2LA

Any report having not been signed by authorized approver, or having been altered without authorization, or having not been stamped by the "Dedicated Testing/Inspection Stamp" is deemed to be invalid. Copying or excerpting portion of, or altering the content of the report is not permitted without the written authorization of AGC. The test results presented in the report apply only to the tested sample. Any objections to report issued by AGC should be submitted to AGC within 15days after the issuance of the test report. Further enquiry of validity or verification of the test report should be addressed to AGC by agc@agc-cert.com.

10. TEST EQUIPMENT LIST

Equipment description	Manufacturer/ Model	Identification No.	Current calibration date	Next calibration date
SAR Probe	MVG	SN 24/20 EP336	Jun. 24,2020	Jun. 23,2021
Phantom	SATIMO	SN_4511_SAM90	Validated. No cal required.	Validated. No cal required.
Liquid	SATIMO	-	Validated. No cal required.	Validated. No cal required.
Comm Tester	Agilent-8960	GB46310822	Aug. 21,2020	Aug. 20,2021
Comm Tester	R&S- CMW500	121209	Aug. 21,2020	Aug. 20,2021
Multimeter	Keithley 2000	1350784	Sep. 07,2020	Sep. 06,2021
SAR Software	SATIMO-OpenSAR	OpenSAR V4_02_32	N/A	N/A
Dipole	SATIMO SID835	SN29/15 DIP 0G835-383	Apr. 26,2019	Apr. 25,2022
Dipole	SATIMO SID1900	SN 46/11 DIP 1G900-187	Apr. 26,2019	Apr. 25,2022
Dipole	SATIMO SID2300	SN 47/14 DIP 2G300-341	Apr. 26,2019	Apr. 25,2022
Dipole	SATIMO SID2600	SN 47/14 DIP 2G600-342	Apr. 26,2019	Apr. 25,2022
Signal Generator	Agilent-E4438C	US41461365	Aug. 21,2020	Aug. 20,2021
Vector Analyzer	Agilent / E4440A	US41421290	Sep. 06,2020	Sep. 05,2021
Network Analyzer	Rhode & Schwarz ZVL6	SN101443	Oct. 16,2020	Oct. 15,2021
Attenuator	Warison /WATT-6SR1211	S/N:WRJ34AYM2F1	June 10,2020	June 09,2021
Attenuator	Mini-circuits / VAT-10+	31405	June 10,2020	June 09,2021
Amplifier	AS0104-55_55	1004793	June 11,2020	June 10,2021
Directional Couple	Werlatone/ C5571-10	SN99463	May 15,2020	May 14,2022
Directional Couple	Werlatone/ C6026-10	SN99482	May 15,2020	May 14,2022
Power Sensor	NRP-Z21	1137.6000.02	Sep. 08,2020	Sep. 07,2021
Power Sensor	NRP-Z23	100323	Feb. 17,2021	Feb. 16,2022
Power Viewer	R&S	V2.3.1.0	N/A	N/A

Note: Per KDB 865664 Dipole SAR Validation, AGC Lab has adopted 3 years calibration intervals. On annual basis, every measurement dipole has been evaluated and is in compliance with the following criteria:
1. There is no physical damage on the dipole;
2. System validation with specific dipole is within 10% of calibrated value;
3. Return-loss is within 20% of calibrated measurement;
4. Impedance is within 5Ω of calibrated measurement.

Any report having not been signed by authorized approver, or having been altered without authorization, or having not been stamped by the "Dedicated Testing/Inspection Stamp" is deemed to be invalid. Copying or excerpting portion of, or altering the content of the report is not permitted without the written authorization of AGC. The test results presented in the report apply only to the tested sample. Any objections to report issued by AGC should be submitted to AGC within 15days after the issuance of the test report. Further enquiry of validity or verification of the test report should be addressed to AGC by agc@agc-cert.com.

11. MEASUREMENT UNCERTAINTY

SATIMO Uncertainty- SN 24/20 EP336 Measurement uncertainty for DUT averaged over 1 gram / 10 gram.									
Uncertainty Component	Sec.	Tol (+- %)	Prob. Dist.	Div.	Ci (1g)	Ci (10g)	1g Ui (+-%)	10g Ui (+-%)	vi
Measurement System									
Probe calibration	E.2.1	7.000	N	1	1	1	7.000	7.000	∞
Axial Isotropy	E.2.2	0.105	R	$\sqrt{3}$	√0.5	√0.5	0.043	0.043	∞
Hemispherical Isotropy	E.2.2	0.105	R	$\sqrt{3}$	√0.5	√0.5	0.043	0.043	∞
Boundary effect	E.2.3	1.000	R	$\sqrt{3}$	1	1	0.577	0.577	∞
Linearity	E.2.4	0.870	R	$\sqrt{3}$	1	1	0.502	0.502	∞
System detection limits	E.2.4	1.000	R	$\sqrt{3}$	1	1	0.577	0.577	∞
Modulation response	E2.5	3.000	R	$\sqrt{3}$	1	1	1.732	1.732	∞
Readout Electronics	E.2.6	0.021	N	1	1	1	0.021	0.021	∞
Response Time	E.2.7	0.000	R	$\sqrt{3}$	1	1	0.000	0.000	∞
Integration Time	E.2.8	1.400	R	$\sqrt{3}$	1	1	0.808	0.808	∞
RF ambient conditions-Noise	E.6.1	3.000	R	$\sqrt{3}$	1	1	1.732	1.732	∞
RF ambient conditions-reflections	E.6.1	3.000	R	$\sqrt{3}$	1	1	1.732	1.732	∞
Probe positioner mechanical tolerance	E.6.2	1.400	R	$\sqrt{3}$	1	1	0.808	0.808	∞
Probe positioning with respect to phantom shell	E.6.3	1.400	R	$\sqrt{3}$	1	1	0.808	0.808	∞
Extrapolation, interpolation, and integrations algorithms for max. SAR evaluation	E.5	2.300	R	$\sqrt{3}$	1	1	1.328	1.328	∞
Test sample Related									
Test sample positioning	E.4.2	2.6	N	1	1	1	2.600	2.600	∞
Device holder uncertainty	E.4.1	3	N	1	1	1	3.000	3.000	∞
Output power variation—SAR drift measurement	E.2.9	5	R	$\sqrt{3}$	1	1	2.887	2.887	∞
SAR scaling	E.6.5	5	R	$\sqrt{3}$	1	1	2.887	2.887	∞
Phantom and tissue parameters									
Phantom shell uncertainty—shape, thickness, and permittivity	E.3.1	4	R	$\sqrt{3}$	1	1	2.309	2.309	∞
Uncertainty in SAR correction for deviations in permittivity and conductivity	E.3.2	1.9	N	1	1	0.84	1.900	1.596	∞
Liquid conductivity measurement	E.3.3	2.5	R	$\sqrt{3}$	0.78	0.71	1.126	1.025	∞
Liquid permittivity measurement	E.3.3	4	N	1	0.78	0.71	3.120	2.840	M
Liquid conductivity—temperature uncertainty	E.3.4	2.5	R	$\sqrt{3}$	0.23	0.26	0.332	0.375	∞
Liquid permittivity—temperature uncertainty	E.3.4	5	N	1	0.23	0.26	1.150	1.300	M
Combined Standard Uncertainty			RSS				10.525	10.341	
Expanded Uncertainty (95% Confidence interval)			K=2				21.051	20.681	

Any report having not been signed by authorized approver, or having been altered without authorization, or having not been stamped by the "Dedicated Testing/Inspection Stamp" is deemed to be invalid. Copying or excerpting portion of, or altering the content of the report is not permitted without the written authorization of AGC. The test results presented in the report apply only to the tested sample. Any objections to report issued by AGC should be submitted to AGC within 15days after the issuance of the test report. Further enquiry of validity or verification of the test report should be addressed to AGC by agc@agc-cert.com.

SATIMO Uncertainty- SN 24/20 EP336 System Validation uncertainty for DUT averaged over 1 gram / 10 gram.									
Uncertainty Component	Sec.	Tol (+- %)	Prob. Dist.	Div.	Ci (1g)	Ci (10g)	1g Ui (+-%)	10g Ui (+-%)	vi
Measurement System									
Probe calibration	E.2.1	7	N	1	1	1	7.000	7.000	∞
Axial Isotropy	E.2.2	0.105	R	$\sqrt{3}$	1	1	0.061	0.061	∞
Hemispherical Isotropy	E.2.2	0.105	R	$\sqrt{3}$	0	0	0.000	0.000	∞
Boundary effect	E.2.3	1	R	$\sqrt{3}$	1	1	0.577	0.577	∞
Linearity	E.2.4	0.870	R	$\sqrt{3}$	1	1	0.502	0.502	∞
System detection limits	E.2.4	1.0	R	$\sqrt{3}$	1	1	0.58	0.58	∞
Modulation response	E2.5	3.0	R	$\sqrt{3}$	0	0	0.00	0.00	∞
Readout Electronics	E.2.6	0.021	N	1	1	1	0.021	0.021	∞
Response Time	E.2.7	0.0	R	$\sqrt{3}$	0	0	0.00	0.00	∞
Integration Time	E.2.8	1.4	R	$\sqrt{3}$	0	0	0.00	0.00	∞
RF ambient conditions-Noise	E.6.1	3.0	R	$\sqrt{3}$	1	1	1.73	1.73	∞
RF ambient conditions-reflections	E.6.1	3.0	R	$\sqrt{3}$	1	1	1.73	1.73	∞
Probe positioner mechanical tolerance	E.6.2	1.4	R	$\sqrt{3}$	1	1	0.81	0.81	∞
Probe positioning with respect to phantom shell	E.6.3	1.4	R	$\sqrt{3}$	1	1	0.81	0.81	∞
Extrapolation, interpolation, and integrations algorithms for max. SAR evaluation	E.5	2.3	R	$\sqrt{3}$	1	1	1.33	1.33	∞
System validation source									
Deviation of experimental dipole from numerical dipole	E.6.4	5.0	N	1	1	1	5.00	5.00	∞
Input power and SAR drift measurement	8,6.6.4	5.0	R	$\sqrt{3}$	1	1	2.89	2.89	∞
Dipole axis to liquid distance	8,E.6.6	2.0	R	$\sqrt{3}$	1	1	1.15	1.15	∞
Phantom and set-up									
Phantom shell uncertainty—shape, thickness, and permittivity	E.3.1	4.0	R	$\sqrt{3}$	1	1	2.31	2.31	∞
Uncertainty in SAR correction for deviations in permittivity and conductivity	E.3.2	1.9	N	1	1	0.84	1.90	1.60	∞
Liquid conductivity（temperature uncertainty）	E.3.3	2.5	R	$\sqrt{3}$	0.78	0.71	1.13	1.02	∞
Liquid conductivity（measured）	E.3.3	4	N	1	0.78	0.71	3.12	2.84	M
Liquid permittivity（temperature uncertainty）	E.3.4	2.5	R	$\sqrt{3}$	0.23	0.26	0.33	0.38	∞
Liquid permittivity（measured）	E.3.4	5	N	1	0.23	0.26	1.15	1.30	M
Combined Standard Uncertainty			RSS				10.458	10.272	
Expanded Uncertainty (95% Confidence interval)			K=2				20.916	20.544	

Any report having not been signed by authorized approver, or having been altered without authorization, or having not been stamped by the "Dedicated Testing/Inspection Stamp" is deemed to be invalid. Copying or excerpting portion of, or altering the content of the report is not permitted without the written authorization of AGC. The test results presented in the report apply only to the tested sample. Any objections to report issued by AGC should be submitted to AGC within 15days after the issuance of the test report. Further enquiry of validity or verification of the test report should be addressed to AGC by agc@agc-cert.com.

SATIMO Uncertainty- SN 24/20 EP336 System Check uncertainty for DUT averaged over 1 gram / 10 gram.									
Uncertainty Component	Sec.	Tol (+- %)	Prob. Dist.	Div.	Ci (1g)	Ci (10g)	1g Ui (+-%)	10g Ui (+-%)	vi
Measurement System									
Probe calibration drift	E.2.1.3	0.5	N	1	1	1	0.50	0.50	∞
Axial Isotropy	E.2.2	0.105	R	$\sqrt{3}$	0	0	0.00	0.00	∞
Hemispherical Isotropy	E.2.2	0.105	R	$\sqrt{3}$	0	0	0.00	0.00	∞
Boundary effect	E.2.3	1	R	$\sqrt{3}$	0	0	0.00	0.00	∞
Linearity	E.2.4	0.870	R	$\sqrt{3}$	0	0	0.00	0.00	∞
System detection limits	E.2.4	1.0	R	$\sqrt{3}$	0	0	0.00	0.00	∞
Modulation response	E2.5	3.0	R	$\sqrt{3}$	0	0	0.00	0.00	∞
Readout Electronics	E.2.6	0.021	N	1	0	0	0.00	0.00	∞
Response Time	E.2.7	0	R	$\sqrt{3}$	0	0	0.00	0.00	∞
Integration Time	E.2.8	1.4	R	$\sqrt{3}$	0	0	0.00	0.00	∞
RF ambient conditions-Noise	E.6.1	3.0	R	$\sqrt{3}$	0	0	0.00	0.00	∞
RF ambient conditions-reflections	E.6.1	3.0	R	$\sqrt{3}$	0	0	0.00	0.00	∞
Probe positioner mechanical tolerance	E.6.2	1.4	R	$\sqrt{3}$	1	1	0.81	0.81	∞
Probe positioning with respect to phantom shell	E.6.3	1.4	R	$\sqrt{3}$	1	1	0.81	0.81	∞
Extrapolation, interpolation, and integrations algorithms for max. SAR evaluation	E.5	2.3	R	$\sqrt{3}$	0	0	0.00	0.00	∞
System check source (dipole)									
Deviation of experimental dipoles	E.6.4	2.0	N	1	1	1	2.00	2.00	∞
Input power and SAR drift measurement	8,6.6.4	5.0	R	$\sqrt{3}$	1	1	2.89	2.89	∞
Dipole axis to liquid distance	8,E.6.6	2.0	R	$\sqrt{3}$	1	1	1.15	1.15	∞
Phantom and tissue parameters									
Phantom shell uncertainty—shape, thickness, and permittivity	E.3.1	4	R	$\sqrt{3}$	1	1	2.31	2.31	∞
Uncertainty in SAR correction for deviations in permittivity and conductivity	E.3.2	1.9	N	1	1	0.84	1.90	1.60	∞
Liquid conductivity measurement	E.3.3	2.5	R	$\sqrt{3}$	0.78	0.71	1.13	1.02	∞
Liquid permittivity measurement	E.3.3	4	N	1	0.78	0.71	3.12	2.84	M
Liquid conductivity—temperature uncertainty	E.3.4	2.5	R	$\sqrt{3}$	0.23	0.26	0.33	0.38	∞
Liquid permittivity—temperature uncertainty	E.3.4	5	N	1	0.23	0.26	1.15	1.30	M
Combined Standard Uncertainty			RSS				5.562	5.203	
Expanded Uncertainty (95% Confidence interval)			K=2				11.124	10.406	

Any report having not been signed by authorized approver, or having been altered without authorization, or having not been stamped by the "Dedicated Testing/Inspection Stamp" is deemed to be invalid. Copying or excerpting portion of, or altering the content of the report is not permitted without the written authorization of AGC. The test results presented in the report apply only to the tested sample. Any objections to report issued by AGC should be submitted to AGC within 15days after the issuance of the test report. Further enquiry of validity or verification of the test report should be addressed to AGC by agc@agc-cert.com.

12. CONDUCTED POWER MEASUREMENT

GSM BAND

Mode	Frequency(MHz)	Avg. Burst Power(dBm)	Duty cycle Factor(dBm)	Frame Power(dBm)
Maximum Power <1>				
GSM 850	824.2	**33.05**	-9	24.05
	836.6	32.69	-9	23.69
	848.8	32.34	-9	23.34
GPRS 850 （1 Slot）	824.2	32.05	-9	23.05
	836.6	32.48	-9	23.48
	848.8	32.31	-9	23.31
GPRS 850 （2 Slot）	824.2	31.44	-6	25.44
	836.6	31.20	-6	25.20
	848.8	31.34	-6	25.34
GPRS 850 （3 Slot）	824.2	30.23	-4.26	25.97
	836.6	30.28	-4.26	26.02
	848.8	30.42	-4.26	**26.16**
GPRS 850 （4 Slot）	824.2	28.52	-3	25.52
	836.6	28.49	-3	25.49
	848.8	28.63	-3	25.63
EGPRS 850 （1 Slot）	824.2	25.70	-9	16.70
	836.6	26.04	-9	17.04
	848.8	25.87	-9	16.87
EGPRS 850 （2 Slot）	824.2	24.52	-6	18.52
	836.6	24.47	-6	18.47
	848.8	24.39	-6	18.39
EGPRS 850 （3 Slot）	824.2	22.74	-4.26	18.48
	836.6	22.69	-4.26	18.43
	848.8	22.88	-4.26	18.62
EGPRS 850 （4 Slot）	824.2	20.43	-3	17.43
	836.6	20.38	-3	17.38
	848.8	20.41	-3	17.41

Any report having not been signed by authorized approver, or having been altered without authorization, or having not been stamped by the "Dedicated Testing/Inspection Stamp" is deemed to be invalid. Copying or excerpting portion of, or altering the content of the report is not permitted without the written authorization of AGC. The test results presented in the report apply only to the tested sample. Any objections to report issued by AGC should be submitted to AGC within 15days after the issuance of the test report. Further enquiry of validity or verification of the test report should be addressed to AGC by agc@agc-cert.com.

Mode	Frequency(MHz)	Avg. Burst Power(dBm)	Duty cycle Factor(dBm)	Frame Power(dBm)
Maximum Power <2>				
GSM 850	824.2	32.49	-9	23.49
	836.6	32.35	-9	23.35
	848.8	32.26	-9	23.26
GPRS 850 （1 Slot）	824.2	32.00	-9	23.00
	836.6	32.36	-9	23.36
	848.8	32.27	-9	23.27
GPRS 850 （2 Slot）	824.2	31.34	-6	25.34
	836.6	31.15	-6	25.15
	848.8	31.28	-6	25.28
GPRS 850 （3 Slot）	824.2	30.17	-4.26	25.91
	836.6	30.20	-4.26	25.94
	848.8	30.33	-4.26	26.07
GPRS 850 （4 Slot）	824.2	28.43	-3	25.43
	836.6	28.38	-3	25.38
	848.8	28.51	-3	25.51

Any report having not been signed by authorized approver, or having been altered without authorization, or having not been stamped by the "Dedicated Testing/Inspection Stamp" is deemed to be invalid. Copying or excerpting portion of, or altering the content of the report is not permitted without the written authorization of AGC. The test results presented in the report apply only to the tested sample. Any objections to report issued by AGC should be submitted to AGC within 15days after the issuance of the test report. Further enquiry of validity or verification of the test report should be addressed to AGC by agc@agc-cert.com.

GSM BAND CONTINUE

Mode	Frequency(MHz)	Avg. Burst Power(dBm)	Duty cycle Factor(dBm)	Frame Power(dBm)
Maximum Power <1>				
PCS1900	1850.2	29.40	-9	20.40
	1880	**29.53**	-9	20.53
	1909.8	29.15	-9	20.15
GPRS1900 （1 Slot）	1850.2	28.20	-9	19.20
	1880	28.34	-9	19.34
	1909.8	27.94	-9	18.94
GPRS1900 （2 Slot）	1850.2	27.13	-6	21.13
	1880	27.05	-6	21.05
	1909.8	27.25	-6	21.25
GPRS1900 （3 Slot）	1850.2	26.45	-4.26	22.19
	1880	26.85	-4.26	**22.59**
	1909.8	26.79	-4.26	22.53
GPRS1900 （4 Slot）	1850.2	24.00	-3	21.00
	1880	24.89	-3	21.89
	1909.8	24.92	-3	21.92
EGPRS1900 （1 Slot）	1850.2	25.78	-9	16.78
	1880	26.01	-9	17.01
	1909.8	24.95	-9	15.95
EGPRS1900 （2 Slot）	1850.2	23.48	-6	17.48
	1880	23.52	-6	17.52
	1909.8	23.38	-6	17.38
EGPRS1900 （3 Slot）	1850.2	22.69	-4.26	18.43
	1880	22.77	-4.26	18.51
	1909.8	22.72	-4.26	18.46
EGPRS1900 （4 Slot）	1850.2	20.74	-3	17.74
	1880	20.49	-3	17.49
	1909.8	20.71	-3	17.71

Any report having not been signed by authorized approver, or having been altered without authorization, or having not been stamped by the "Dedicated Testing/Inspection Stamp" is deemed to be invalid. Copying or excerpting portion of, or altering the content of the report is not permitted without the written authorization of AGC. The test results presented in the report apply only to the tested sample. Any objections to report issued by AGC should be submitted to AGC within 15days after the issuance of the test report. Further enquiry of validity or verification of the test report should be addressed to AGC by agc@agc-cert.com.

Mode	Frequency(MHz)	Avg. Burst Power(dBm)	Duty cycle Factor(dBm)	Frame Power(dBm)
Maximum Power <2>				
PCS1900	1850.2	28.66	-9	19.66
	1880	28.74	-9	19.74
	1909.8	28.53	-9	19.53
GPRS1900 （1 Slot）	1850.2	28.15	-9	19.15
	1880	28.27	-9	19.27
	1909.8	27.85	-9	18.85
GPRS1900 （2 Slot）	1850.2	27.06	-6	21.06
	1880	27.00	-6	21.00
	1909.8	27.17	-6	21.17
GPRS1900 （3 Slot）	1850.2	26.36	-4.26	22.10
	1880	26.76	-4.26	22.50
	1909.8	26.63	-4.26	22.37
GPRS1900 （4 Slot）	1850.2	23.92	-3	20.92
	1880	24.76	-3	21.76
	1909.8	24.81	-3	21.81

Note 1:
The Frame Power (Source-based time-averaged Power) is scaled the maximum burst average power based on time slots. The calculated methods are show as following:
Frame Power = Max burst power (1 Up Slot) – 9 dB
Frame Power = Max burst power (2 Up Slot) – 6 dB
Frame Power = Max burst power (3 Up Slot) – 4.26 dB
Frame Power = Max burst power (4 Up Slot) – 3 dB
Note 2:
SAR is not required for GPRS (1 Slot) Mode because its output power is less than of Voice Mode

Any report having not been signed by authorized approver, or having been altered without authorization, or having not been stamped by the "Dedicated Testing/Inspection Stamp" is deemed to be invalid. Copying or excerpting portion of, or altering the content of the report is not permitted without the written authorization of AGC. The test results presented in the report apply only to the tested sample. Any objections to report issued by AGC should be submitted to AGC within 15days after the issuance of the test report. Further enquiry of validity or verification of the test report should be addressed to AGC by agc@agc-cert.com.

UMTS BAND
HSDPA Setup Configuration:

·The EUT was connected to Base Station Agilent E5515C referred to the Setup Configuration.

·The RF path losses were compensated into the measurements.

·A call was established between EUT and Based Station with following setting:

(1) Set Gain Factors(βc and βd) parameters set according to each

(2) Set RMC 12.2Kbps+HSDPA mode.

(3) Set Cell Power=-86dBm

(4) Set HS-DSCH Configuration Type to FRC (H-set 1, QPSK)

(5) Select HSDPA Uplink Parameters

(6) Set Delta ACK, Delta NACK and Delta CQI=8

(7) Set Ack - Nack Repetition Factor to 3

(8) Set CQI Feedback Cycle (k) to 4ms

(9) Set CQI Repetition Factor to 2

(10) Power Ctrl Mode=All Up bits

·The transmitted maximum output power was recorded.

Table C.10.2.4: β values for transmitter characteristics tests with HS-DPCCH

Sub-test	βc (Note5)	βd	βd (SF)	βc/βd	βHS (Note1, Note 2)	CM (dB) (Note 3)	MPR (dB) (Note 3)
1	2/15	15/15	64	2/15	4/15	0.0	0.0
2	12/15(Note 4)	15/15(Note 4)	64	12/15(Note 4)	24/15	1.0	0.0
3	15/15	8/15	64	15/8	30/15	1.5	0.5
4	15/15	4/15	64	15/4	30/15	1.5	0.5

Note 1: ΔACK, ΔNACK and ΔCQI = 30/15 with β_{hs} = 30/15 * β_c .
Note 2: For the HS-DPCCH power mask requirement test in clause 5.2C, 5.7A, and the Error Vector Magnitude (EVM) with HS-DPCCH test in clause 5.13.1A, and HSDPA EVM with phase discontinuity in clause 5.13.1AA, ΔACK and ΔNACK = 30/15 with β_{hs} = 30/15 * β_c , and ΔCQI = 24/15 with β_{hs} = 24/15 * β_c .
Note 3: CM = 1 for βc/βd =12/15, hs/ c=24/15. For all other combinations of DPDCH, DPCCH and HS-DPCCH the MPR is based on the relative CM difference. This is applicable for only UEs that support HSDPA in release 6 and later releases.
Note 4: For subtest 2 the c/ d ratio of 12/15 for the TFC during the measurement period (TF1, TF0) is achieved by setting the signalled gain factors for the reference TFC (TF1, TF1) to c = 11/15 and d = 15/15.

Any report having not been signed by authorized approver, or having been altered without authorization, or having not been stamped by the "Dedicated Testing/Inspection Stamp" is deemed to be invalid. Copying or excerpting portion of, or altering the content of the report is not permitted without the written authorization of AGC. The test results presented in the report apply only to the tested sample. Any objections to report issued by AGC should be submitted to AGC within 15days after the issuance of the test report. Further enquiry of validity or verification of the test report should be addressed to AGC by agc@agc-cert.com.

HSUPA Setup Configuration:

· The EUT was connected to Base Station Agilent E5515C referred to the Setup Configuration.

· The RF path losses were compensated into the measurements.

· A call was established between EUT and Base Station with following setting * :

(1) Call Configs = 5.2B, 5.9B, 5.10B, and 5.13.2B with QPSK

(2) Set the Gain Factors (βc and βd) and parameters (AG Index) were set according to each specific sub-test in the following table, C11.1.3, quoted from the TS 34.121

(3) Set Cell Power = -86 dBm

(4) Set Channel Type = 12.2k + HSPA

(5) Set UE Target Power

(6) Power Ctrl Mode= Alternating bits

(7) Set and observe the E-TFCI

(8) Confirm that E-TFCI is equal to the target E-TFCI of 75 for sub-test 1, and other subtest's E-TFCI

· The transmitted maximum output power was recorded.

Table C.11.1.3: β values for transmitter characteristics tests with HS-DPCCH and E-DCH

Sub-test	βc	βd	βd (SF)	βc/βd	βHS (Note 1)	βec	βed (Note 4) (Note 5)	βed (SF)	βed (Codes)	CM (dB) (Note 2)	MPR (dB) (Note 2) (Note 6)	AG Index (Note 5)	E-TFCI
1	11/15 (Note 3)	15/15 (Note 3)	64	11/15 (Note 3)	22/15	209/225	1309/225	4	1	1.0	0.0	20	75
2	6/15	15/15	64	6/15	12/15	12/15	94/75	4	1	3.0	2.0	12	67
3	15/15	9/15	64	15/9	30/15	30/15	βed1: 47/15 βed2: 47/15	4 4	2	2.0	1.0	15	92
4	2/15	15/15	64	2/15	4/15	2/15	56/75	4	1	3.0	2.0	17	71
5	15/15	0	-	-	5/15	5/15	47/15	4	1	1.0	0.0	12	67

Note 1: For sub-test 1 to 4, ΔACK, ΔNACK and ΔCQI = 30/15 with β_{hs} = 30/15 * β_c . For sub-test 5, ΔACK, ΔNACK and ΔCQI = 5/15 with β_{hs} = 5/15 * β_c .
Note 2: CM = 1 for βc/βd =12/15, hs/ c=24/15. For all other combinations of DPDCH, DPCCH, HS-DPCCH, E-DPDCH and E-DPCCH the MPR is based on the relative CM difference.
Note 3: For subtest 1 the c/ d ratio of 11/15 for the TFC during the measurement period (TF1, TF0) is achieved by setting the signalled gain factors for the reference TFC (TF1, TF1) to c = 10/15 and d = 15/15.
Note 4: In case of testing by UE using E-DPDCH Physical Layer category 1, Sub-test 3 is omitted according to TS25.306 Table 5.1g.
Note 5: βed cannot be set directly; it is set by Absolute Grant Value.
Note 6: For subtests 2, 3 and 4, UE may perform E-DPDCH power scaling at max power which could results in slightly smaller MPR values.

Any report having not been signed by authorized approver, or having been altered without authorization, or having not been stamped by the "Dedicated Testing/Inspection Stamp" is deemed to be invalid. Copying or excerpting portion of, or altering the content of the report is not permitted without the written authorization of AGC. The test results presented in the report apply only to the tested sample. Any objections to report issued by AGC should be submitted to AGC within 15days after the issuance of the test report. Further enquiry of validity or verification of the test report should be addressed to AGC by agc@agc-cert.com.

UMTS BAND II

Mode	Frequency (MHz)	Avg. Burst Power (dBm)
WCDMA 1900 RMC	1852.4	23.17
	1880	23.17
	1907.6	23.23
HSDPA Subtest 1	1852.4	**23.57**
	1880	23.34
	1907.6	23.22
HSDPA Subtest 2	1852.4	23.13
	1880	23.05
	1907.6	23.07
HSDPA Subtest 3	1852.4	22.15
	1880	22.23
	1907.6	22.29
HSDPA Subtest 4	1852.4	21.82
	1880	21.92
	1907.6	22.00
HSUPA Subtest 1	1852.4	19.70
	1880	20.39
	1907.6	20.48
HSUPA Subtest 2	1852.4	20.64
	1880	20.32
	1907.6	20.36
HSUPA Subtest 3	1852.4	20.77
	1880	20.67
	1907.6	20.81
HSUPA Subtest 4	1852.4	20.48
	1880	20.45
	1907.6	20.64
HSUPA Subtest 5	1852.4	21.27
	1880	21.19
	1907.6	21.11

Any report having not been signed by authorized approver, or having been altered without authorization, or having not been stamped by the "Dedicated Testing/Inspection Stamp" is deemed to be invalid. Copying or excerpting portion of, or altering the content of the report is not permitted without the written authorization of AGC. The test results presented in the report apply only to the tested sample. Any objections to report issued by AGC should be submitted to AGC within 15days after the issuance of the test report. Further enquiry of validity or verification of the test report should be addressed to AGC by agc@agc-cert.com.

UMTS BAND V

Mode	Frequency (MHz)	Avg. Burst Power (dBm)
WCDMA 850 RMC	826.4	22.89
	836.4	22.93
	846.6	22.94
HSDPA Subtest 1	826.4	23.35
	836.4	**23.65**
	846.6	23.45
HSDPA Subtest 2	826.4	22.34
	836.4	22.57
	846.6	22.44
HSDPA Subtest 3	826.4	21.05
	836.4	21.66
	846.6	21.49
HSDPA Subtest 4	826.4	21.01
	836.4	21.14
	846.6	20.94
HSUPA Subtest 1	826.4	22.31
	836.4	20.59
	846.6	20.47
HSUPA Subtest 2	826.4	22.29
	836.4	20.18
	846.6	20.56
HSUPA Subtest 3	826.4	22.27
	836.4	20.56
	846.6	20.89
HSUPA Subtest 4	826.4	22.21
	836.4	19.95
	846.6	19.74
HSUPA Subtest 5	826.4	22.33
	836.4	21.05
	846.6	21.25

Any report having not been signed by authorized approver, or having been altered without authorization, or having not been stamped by the "Dedicated Testing/Inspection Stamp" is deemed to be invalid. Copying or excerpting portion of, or altering the content of the report is not permitted without the written authorization of AGC. The test results presented in the report apply only to the tested sample. Any objections to report issued by AGC should be submitted to AGC within 15days after the issuance of the test report. Further enquiry of validity or verification of the test report should be addressed to AGC by agc@agc-cert.com.

According to 3GPP 25.101 sub-clause 6.2.2 , the maximum output power is allowed to be reduced by following the table.

Table 6.1aA: UE maximum output power with HS-DPCCH and E-DCH

UE Transmit Channel Configuration	CM(db)	MPR(db)
For all combinations of ,DPDCH,DPCCH HS-DPDCH,E-DPDCH and E-DPCCH	0≤ CM≤3.5	MAX(CM-1,0)
Note: CM=1 for β_c/β_d=12/15, β_{hs}/β_c=24/15.For all other combinations of DPDCH, DPCCH, HS-DPCCH, E-DPDCH and E-DPCCH the MPR is based on the relative CM difference.		

The device supports MPR to solve linearity issues (ACLR or SEM) due to the higher peak-to average ratios (PAR) of the HSUPA signal. This prevents saturating the full range of the TX DAC inside of device and provides a reduced power output to the RF transceiver chip according to the Cubic Metric (a function of the combinations of DPDCH, DPCCH, HS-DPCCH, E-DPDCH and E-DPCCH).

When E-DPDCH channels are present the beta gains on those channels are reduced firsts to try to get the power under the allowed limit. If the beta gains are lowered as far as possible, then a hard limiting is applied at the maximum allowed level.

The SW currently recalculates the cubic metric every time the beta gains on the E-DPDCH are reduced. The cubic metric will likely get lower each time this is done .However, there is no reported reduction of maximum output power in the HSUPA mode since the device also provides a compensation for the power back-off by increasing the gain of TX_AGC in the transceiver (PA) device.

The end effect is that the DUT output power is identical to the case where there is no MPR in the device.

Any report having not been signed by authorized approver, or having been altered without authorization, or having not been stamped by the "Dedicated Testing/Inspection Stamp" is deemed to be invalid. Copying or excerpting portion of, or altering the content of the report is not permitted without the written authorization of AGC. The test results presented in the report apply only to the tested sample. Any objections to report issued by AGC should be submitted to AGC within 15days after the issuance of the test report. Further enquiry of validity or verification of the test report should be addressed to AGC by agc@agc-cert.com.

LTE Band

LTE (TDD) Considerations

For Time-Division Duplex (TDD) systems, SAR must be tested using a fixed periodic duty factor according to the highest transmission duty factor implemented for the device and supported by the defined 3GPP LTE TDD configurations.

SAR was tested with the highest transmission duty factor (63.33%) using Uplink-downlink configuration 0 and Special subframe configuration 7.

LTE TDD Band 38, Band 40 and Band 41 supports 3GPP TS 36.211 section 4.2 for Type 2 Frame Structure and Table 4.2-2 for uplink-downlink configurations and Table 4.2-1 for Special subframe configurations.

Table 4.2-1: Configuration of special subframe (lengths of DwPTS/GP/UpPTS)

Special subframe configuration	Normal cyclic prefix in downlink			Extended cyclic prefix in downlink		
	DwPTS	UpPTS		DwPTS	UpPTS	
		Normal cyclic prefix in uplink	Extended cyclic prefix in uplink		Normal cyclic prefix in uplink	Extended cyclic prefix in uplink
0	$6592 \cdot T_s$	$2192 \cdot T_s$	$2560 \cdot T_s$	$7680 \cdot T_s$	$2192 \cdot T_s$	$2560 \cdot T_s$
1	$19760 \cdot T_s$			$20480 \cdot T_s$		
2	$21952 \cdot T_s$			$23040 \cdot T_s$		
3	$24144 \cdot T_s$			$25600 \cdot T_s$		
4	$26336 \cdot T_s$			$7680 \cdot T_s$	$4384 \cdot T_s$	$5120 \cdot T_s$
5	$6592 \cdot T_s$	$4384 \cdot T_s$	$5120 \cdot T_s$	$20480 \cdot T_s$		
6	$19760 \cdot T_s$			$23040 \cdot T_s$		
7	$21952 \cdot T_s$			$12800 \cdot T_s$		
8	$24144 \cdot T_s$			-	-	-
9	$13168 \cdot T_s$			-	-	-

Table 4.2-2: Uplink-downlink configurations

Uplink-downlink configuration	Downlink-to-Uplink Switch-point periodicity	Subframe number									
		0	1	2	3	4	5	6	7	8	9
0	5 ms	D	S	U	U	U	D	S	U	U	U
1	5 ms	D	S	U	U	D	D	S	U	U	D
2	5 ms	D	S	U	D	D	D	S	U	D	D
3	10 ms	D	S	U	U	U	D	D	D	D	D
4	10 ms	D	S	U	U	D	D	D	D	D	D
5	10 ms	D	S	U	D	D	D	D	D	D	D
6	5 ms	D	S	U	U	U	D	S	U	U	D

Any report having not been signed by authorized approver, or having been altered without authorization, or having not been stamped by the "Dedicated Testing/Inspection Stamp" is deemed to be invalid. Copying or excerpting portion of, or altering the content of the report is not permitted without the written authorization of AGC. The test results presented in the report apply only to the tested sample. Any objections to report issued by AGC should be submitted to AGC within 15days after the issuance of the test report. Further enquiry of validity or verification of the test report should be addressed to AGC by agc@agc-cert.com.

Calculated Duty Cycle

Uplink-Downlink Configuration	Downlink-to-Uplink Switch-point Periodicity	Subframe Number										Calculated Duty Cycle(%)
		0	1	2	3	4	5	6	7	8	9	
0	5ms	D	S	U	U	U	D	S	U	U	U	63.33
1	5ms	D	S	U	U	D	D	S	U	U	D	43.33
2	5ms	D	S	U	D	D	D	S	U	D	D	23.33
3	10ms	D	S	U	U	U	D	D	D	D	D	31.67
4	10ms	D	S	U	U	D	D	D	D	D	D	21.67
5	10ms	D	S	U	D	D	D	D	D	D	D	11.67
6	5ms	D	S	U	U	U	D	S	U	U	D	53.33

Note: Calculated Duty Cycle = Extended cyclic prefix in uplink x (Ts) x # of S + # of U
Example for Calculated Duty Cycle for Uplink-Downlink Configuration 0:
Calculated Duty Cycle = 5120 x [1/(15000 x 2048)] x 2 + 6 ms = 63.33%
where
Ts = 1/(15000 x 2048) seconds

Any report having not been signed by authorized approver, or having been altered without authorization, or having not been stamped by the "Dedicated Testing/Inspection Stamp" is deemed to be invalid. Copying or excerpting portion of, or altering the content of the report is not permitted without the written authorization of AGC. The test results presented in the report apply only to the tested sample. Any objections to report issued by AGC should be submitted to AGC within 15days after the issuance of the test report. Further enquiry of validity or verification of the test report should be addressed to AGC by agc@agc-cert.com.

LTE Band

Conducted Power of LTE Band 5(dBm)							
Bandwidth	**Modulation**	**RB size**	**RB offset**	**Target MPR**	**Channel 20407**	**Channel 20525**	**Channel 20643**
1.4MHz	QPSK	1	0	0	20.35	23.16	23.30
			2	0	20.18	23.10	23.34
			5	0	20.20	23.12	23.36
		3	0	0	23.18	23.24	23.39
			1	0	23.07	23.21	23.38
			2	0	20.31	23.21	23.40
		6	0	1	22.07	22.23	22.40
	16QAM	1	0	1	20.83	22.60	22.77
			2	1	21.00	22.68	22.85
			5	1	20.70	22.64	22.69
		3	0	1	21.99	22.05	22.06
			1	1	21.91	22.02	22.07
			2	1	20.10	21.99	22.03
		6	0	2	21.70	21.45	21.36
Bandwidth	**Modulation**	**RB size**	**RB offset**	**Target MPR**	**Channel 20415**	**Channel 20525**	**Channel 20635**
3MHz	QPSK	1	0	0	23.11	23.02	23.47
			7	0	23.08	23.16	**23.56**
			14	0	23.19	23.15	23.53
		8	0	1	22.15	22.17	22.38
			4	1	22.13	22.15	22.35
			7	1	21.97	22.16	22.38
		15	0	1	21.98	22.16	22.44
	16QAM	1	0	1	21.45	22.33	22.13
			7	1	21.57	22.15	22.19
			14	1	21.45	22.29	22.09
		8	0	2	21.11	21.46	21.54
			4	2	21.66	21.67	21.48
			7	2	21.66	21.67	21.54
		15	0	2	21.31	21.16	21.23

Any report having not been signed by authorized approver, or having been altered without authorization, or having not been stamped by the "Dedicated Testing/Inspection Stamp" is deemed to be invalid. Copying or excerpting portion of, or altering the content of the report is not permitted without the written authorization of AGC. The test results presented in the report apply only to the tested sample. Any objections to report issued by AGC should be submitted to AGC within 15days after the issuance of the test report. Further enquiry of validity or verification of the test report should be addressed to AGC by agc@agc-cert.com.

Conducted Power of LTE Band 5(dBm)							
Bandwidth	Modulation	RB size	RB offset	Target MPR	Channel 20425	Channel 20525	Channel 20625
5MHz	QPSK	1	0	0	23.20	23.20	23.46
			12	0	23.03	23.43	23.56
			24	0	23.14	23.35	23.48
		12	0	1	22.14	22.15	22.43
			6	1	22.09	22.15	22.44
			11	1	21.99	22.17	22.40
		25	0	1	22.06	22.18	22.44
	16QAM	1	0	1	22.14	21.45	22.11
			12	1	22.16	21.70	22.11
			24	1	22.27	21.74	22.08
		12	0	2	21.63	21.31	21.76
			6	2	21.62	21.55	21.76
			11	2	21.18	21.58	21.34
		25	0	2	21.18	21.37	21.26
Bandwidth	Modulation	RB size	RB offset	Target MPR	Channel 20450	Channel 20525	Channel 20600
10MHz	QPSK	1	0	0	23.01	22.77	23.37
			24	0	22.39	23.38	23.26
			49	0	22.38	23.17	23.39
		25	0	1	21.27	22.16	22.41
			12	1	21.27	22.03	22.37
			25	1	21.75	22.03	22.40
		50	0	1	21.62	22.15	22.31
	16QAM	1	0	1	21.82	22.02	22.05
			24	1	21.23	21.58	22.00
			49	1	21.33	21.99	22.04
		25	0	2	20.87	21.38	21.62
			12	2	20.54	21.34	21.67
			25	2	20.54	21.34	21.44
		50	0	2	20.59	21.29	21.40

Any report having not been signed by authorized approver, or having been altered without authorization, or having not been stamped by the "Dedicated Testing/Inspection Stamp" is deemed to be invalid. Copying or excerpting portion of, or altering the content of the report is not permitted without the written authorization of AGC. The test results presented in the report apply only to the tested sample. Any objections to report issued by AGC should be submitted to AGC within 15days after the issuance of the test report. Further enquiry of validity or verification of the test report should be addressed to AGC by agc@agc-cert.com.

Conducted Power of LTE Band 38 (dBm)							
Bandwidth	Modulation	RB size	RB offset	Target MPR	Channel 37775	Channel 38000	Channel 38225
5MHz	QPSK	1	0	0	21.96	21.83	22.03
			12	0	22.13	21.94	21.93
			24	0	22.12	21.89	22.06
		12	0	1	21.03	20.96	20.95
			6	1	21.15	20.96	20.97
			13	1	21.16	20.88	20.96
		25	0	1	21.10	20.77	21.04
	16QAM	1	0	1	21.18	21.07	21.10
			12	1	21.18	21.05	21.17
			24	1	21.38	21.12	21.32
		12	0	2	20.22	20.05	20.16
			6	2	20.22	19.98	20.17
			13	2	20.24	19.98	20.22
		25	0	2	20.11	19.99	20.02
Bandwidth	Modulation	RB size	RB offset	Target MPR	Channel 37800	Channel 38000	Channel 38200
10MHz	QPSK	1	0	0	22.30	21.81	21.87
			24	0	22.21	21.92	21.91
			49	0	22.13	21.78	21.93
		25	0	1	21.14	20.95	21.00
			12	1	21.14	20.87	21.07
			25	1	21.31	20.77	21.02
		50	0	1	21.22	20.78	20.98
	16QAM	1	0	1	20.97	20.74	20.79
			24	1	21.09	20.61	20.88
			49	1	21.19	20.70	20.83
		25	0	2	20.35	20.05	20.01
			12	2	20.10	19.97	19.99
			25	2	20.10	19.97	20.15
		50	0	2	20.33	20.05	20.15

Any report having not been signed by authorized approver, or having been altered without authorization, or having not been stamped by the "Dedicated Testing/Inspection Stamp" is deemed to be invalid. Copying or excerpting portion of, or altering the content of the report is not permitted without the written authorization of AGC. The test results presented in the report apply only to the tested sample. Any objections to report issued by AGC should be submitted to AGC within 15days after the issuance of the test report. Further enquiry of validity or verification of the test report should be addressed to AGC by agc@agc-cert.com.

Conducted Power of LTE Band 38 (dBm)							
Bandwidth	Modulation	RB size	RB offset	Target MPR	Channel 37825	Channel 38000	Channel 38175
15MHz	QPSK	1	0	0	22.20	21.83	21.96
			38	0	**22.42**	21.90	21.86
			74	0	22.06	21.79	21.79
		37	0	1	20.94	20.68	21.33
			18	1	21.06	20.89	21.16
			37	1	20.91	20.88	21.18
		75	0	1	21.26	20.97	21.01
	16QAM	1	0	1	21.04	20.68	21.17
			38	1	21.08	20.73	21.36
			74	1	20.92	20.87	21.17
		37	0	2	21.06	20.88	21.34
			18	2	20.93	20.68	21.16
			37	2	20.91	20.88	21.16
		75	0	2	20.35	20.10	20.22
Bandwidth	Modulation	RB size	RB offset	Target MPR	Channel 37850	Channel 38000	Channel 38150
20MHz	QPSK	1	0	0	21.82	21.95	21.77
			49	0	22.38	22.02	21.85
			99	0	22.29	21.78	21.82
		50	0	1	21.20	20.89	21.15
			25	1	21.21	20.91	20.94
			49	1	21.08	20.92	21.11
		100	0	1	21.16	20.90	20.99
	16QAM	1	0	1	21.60	20.96	21.49
			49	1	21.92	20.95	21.48
			99	1	21.90	20.83	21.53
		50	0	2	20.26	20.00	20.34
			25	2	20.44	20.03	20.35
			49	2	20.44	20.03	20.12
		100	0	2	20.29	19.95	20.15

Any report having not been signed by authorized approver, or having been altered without authorization, or having not been stamped by the "Dedicated Testing/Inspection Stamp" is deemed to be invalid. Copying or excerpting portion of, or altering the content of the report is not permitted without the written authorization of AGC. The test results presented in the report apply only to the tested sample. Any objections to report issued by AGC should be submitted to AGC within 15days after the issuance of the test report. Further enquiry of validity or verification of the test report should be addressed to AGC by agc@agc-cert.com.

Avg. Output Power of LTE Band 40(dBm) -Lower Side						
Bandwidth	Modulation	RB size	RB offset	Channel 38725	Channel 38750	Channel 38775
5MHz	QPSK	1	0	22.90	22.74	22.80
			12	22.81	22.86	22.96
			24	22.94	22.75	22.88
		12	0	21.91	21.93	21.91
			6	21.92	21.86	21.91
			13	21.89	21.84	21.96
		25	0	21.92	21.83	21.94
	16QAM	1	0	21.90	22.02	21.91
			12	21.89	21.93	21.76
			24	21.76	21.90	21.86
		12	0	20.85	20.92	20.97
			6	20.90	20.98	20.94
			13	20.83	20.93	20.92
		25	0	20.86	20.83	20.91

Bandwidth	Modulation	RB size	RB offset	Channel 38750
10MHz	QPSK	1	0	22.92
			24	22.97
			49	**23.12**
		25	0	21.99
			12	21.95
			25	21.96
		50	0	22.04
	16QAM	1	0	21.80
			24	21.89
			49	22.05
		25	0	20.99
			12	20.98
			25	20.96
		50	0	20.99

Any report having not been signed by authorized approver, or having been altered without authorization, or having not been stamped by the "Dedicated Testing/Inspection Stamp" is deemed to be invalid. Copying or excerpting portion of, or altering the content of the report is not permitted without the written authorization of AGC. The test results presented in the report apply only to the tested sample. Any objections to report issued by AGC should be submitted to AGC within 15days after the issuance of the test report. Further enquiry of validity or verification of the test report should be addressed to AGC by agc@agc-cert.com.

Avg. Output Power of LTE Band 40(dBm) -Upper Side						
Bandwidth	Modulation	RB size	RB offset	Channel 39175	Channel 39200	Channel 39225
5MHz	QPSK	1	0	23.51	23.53	23.44
			12	23.51	23.34	23.45
			24	23.65	23.45	23.19
		12	0	22.57	22.50	22.37
			6	22.53	22.56	22.47
			13	22.54	22.50	22.43
		25	0	22.60	22.53	22.39
	16QAM	1	0	22.50	22.49	22.38
			12	22.57	22.69	22.37
			24	22.47	22.65	22.14
		12	0	21.57	21.50	21.46
			6	21.58	21.54	21.48
			13	21.55	21.61	21.38
		25	0	21.59	21.49	21.41

Bandwidth	Modulation	RB size	RB offset	Channel 39200
10MHz	QPSK	1	0	**23.83**
			24	23.36
			49	23.60
		25	0	22.69
			12	22.55
			25	22.65
		50	0	22.69
	16QAM	1	0	22.73
			24	22.51
			49	22.25
		25	0	21.65
			12	21.63
			25	21.59
		50	0	21.62

Any report having not been signed by authorized approver, or having been altered without authorization, or having not been stamped by the "Dedicated Testing/Inspection Stamp" is deemed to be invalid. Copying or excerpting portion of, or altering the content of the report is not permitted without the written authorization of AGC. The test results presented in the report apply only to the tested sample. Any objections to report issued by AGC should be submitted to AGC within 15days after the issuance of the test report. Further enquiry of validity or verification of the test report should be addressed to AGC by agc@agc-cert.com.

Conducted Power of LTE Band 41(dBm)							
Bandwidth	Modulation	RB size	RB offset	Target MPR	Channel 39675	Channel 40620	Channel 41565
5MHz	QPSK	1	0	0	23.57	21.58	21.74
			12	0	23.59	21.63	21.69
			24	0	23.58	21.70	21.70
		12	0	1	22.72	20.60	20.83
			6	1	22.72	20.66	20.64
			13	1	22.63	20.65	20.64
		25	0	1	22.63	20.52	20.63
	16QAM	1	0	1	23.28	20.89	20.79
			12	1	23.20	20.91	21.05
			24	1	23.18	20.67	20.79
		12	0	2	21.80	19.66	19.86
			6	2	21.66	19.68	19.86
			13	2	21.64	19.72	19.95
		25	0	2	21.93	19.73	19.78
Bandwidth	Modulation	RB size	RB offset	Target MPR	Channel 39700	Channel 40620	Channel 41540
10MHz	QPSK	1	0	0	23.54	21.53	21.62
			24	0	**23.75**	21.59	21.65
			49	0	23.63	21.54	21.68
		25	0	1	22.69	20.64	20.69
			12	1	22.65	20.64	20.69
			25	1	22.69	20.77	20.78
		50	0	1	22.62	20.55	20.64
	16QAM	1	0	1	23.28	20.47	20.43
			24	1	23.22	20.54	20.58
			49	1	23.37	20.39	20.67
		25	0	2	21.88	19.66	19.70
			12	2	21.88	19.79	19.75
			25	2	21.81	19.66	19.74
		50	0	2	21.81	19.74	19.87

Any report having not been signed by authorized approver, or having been altered without authorization, or having not been stamped by the "Dedicated Testing/Inspection Stamp" is deemed to be invalid. Copying or excerpting portion of, or altering the content of the report is not permitted without the written authorization of AGC. The test results presented in the report apply only to the tested sample. Any objections to report issued by AGC should be submitted to AGC within 15days after the issuance of the test report. Further enquiry of validity or verification of the test report should be addressed to AGC by agc@agc-cert.com.

Conducted Power of LTE Band 41(dBm)							
Bandwidth	Modulation	RB size	RB offset	Target MPR	Channel 39725	Channel 40620	Channel 41515
15MHz	QPSK	1	0	0	23.60	21.53	21.25
			37	0	23.59	21.48	21.28
			74	0	23.61	21.66	21.32
		37	0	1	23.42	20.64	20.96
			19	1	23.26	20.62	21.06
			38	1	23.31	20.32	20.81
		75	0	1	22.65	20.69	20.74
	16QAM	1	0	1	23.27	20.47	20.88
			37	1	23.40	20.33	21.05
			74	1	23.32	20.64	21.02
		37	0	2	23.42	20.32	20.82
			19	2	23.26	20.64	21.02
			38	2	23.31	20.62	20.95
		75	0	2	21.86	19.82	19.82
Bandwidth	Modulation	RB size	RB offset	Target MPR	Channel 39750	Channel 40620	Channel 41490
20MHz	QPSK	1	0	0	22.66	21.45	21.56
			49	0	22.52	21.74	21.50
			99	0	22.64	21.51	21.64
		50	0	1	21.41	20.64	20.61
			25	1	21.47	20.40	20.63
			49	1	21.46	20.58	20.77
		100	0	1	21.49	20.60	20.75
	16QAM	1	0	1	22.55	20.51	20.76
			49	1	22.66	20.54	20.93
			99	1	22.63	20.67	21.16
		50	0	2	20.66	19.69	19.96
			25	2	20.65	19.68	19.97
			49	2	20.66	19.87	20.13
		100	0	2	20.60	19.66	19.82

Any report having not been signed by authorized approver, or having been altered without authorization, or having not been stamped by the "Dedicated Testing/Inspection Stamp" is deemed to be invalid. Copying or excerpting portion of, or altering the content of the report is not permitted without the written authorization of AGC. The test results presented in the report apply only to the tested sample. Any objections to report issued by AGC should be submitted to AGC within 15days after the issuance of the test report. Further enquiry of validity or verification of the test report should be addressed to AGC by agc@agc-cert.com.

The following tests were conducted according to the test requirements outlined in section 6.2 of the 3GPP TS36.101 specification.
UE Power Class: 3 (23 +/- 2dBm). The allowed Maximum Power Reduction (MPR) for the maximum output power due to higher order modulation and transmit bandwidth configuration (resource blocks) is specified in Table 6.2.3.3-1 of the 3GPP TS36.101.

Table 6.2.3.3-1 Maximum Power Reduction (MPR) for Power class3

Modulation	Maximum Power Reduction (MPR) for Power[RB]						MPR(dB)
	1.4MHz	3MHz	5MHz	10MHz	15MHz	20MHz	
QPSK	＞5	＞4	＞8	＞12	＞16	＞18	≤1
16QAM	≤5	≤4	≤8	≤12	≤16	≤18	≤1
16QAM	＞5	＞4	＞8	＞12	＞16	＞18	≤2

The allowed A-MPR values specified below in Table 6.2.4.3-1 of 3GPP TS36.101 are in addition to the allowed MPR requirements. All the measurements below were performed with A-MPR disabled, by using Network Signaling Value of “NS_01”.3

Any report having not been signed by authorized approver, or having been altered without authorization, or having not been stamped by the “Dedicated Testing/Inspection Stamp” is deemed to be invalid. Copying or excerpting portion of, or altering the content of the report is not permitted without the written authorization of AGC. The test results presented in the report apply only to the tested sample. Any objections to report issued by AGC should be submitted to AGC within 15days after the issuance of the test report. Further enquiry of validity or verification of the test report should be addressed to AGC by agc@agc-cert.com.

Table 6.2.4.3-1: Additional Maximum Power Reduction (A-MPR) / Spectrum Emission requirements

Network Signaling value	Requirements (sub-clause)	E-UTRA Band	Channel bandwidth (MHz)	Resources Blocks (N_{RB})	A-MPR (dB)
NS_01	6.6.2.1.1	Table 5.2-1	1.4,3,5,10,15,20	Table 5.4.2-1	N/A
NS_03	6.6.2.2.3.1	2,4,10, 23, 25,35,36	3	>5	≤ 1
			5	>6	≤ 1
			10	>6	≤ 1
			15	>8	≤ 1
			20	>10	≤ 1
NS_04	6.6.2.2.3.2	41	5	>6	≤1
			10, 15, 20	Table 6.2.4.3-4	
NS_05	6.6.3.3.3.1	1	10,15,20	≥ 50	≤ 1
NS_06	6.6.2.2.3.3	12, 13, 14, 17	1.4, 3, 5, 10	Table 5.4.2-1	N/A
NS_07	6.6.2.2.3.3 6.6.3.3.3.2	13	10	Table 6.2.4.3-2	Table 6.2.4.3-2
NS_08	6.6.3.3.3.3	19	10, 15	> 44	≤ 3
NS_09	6.6.3.3.3.4	21	10, 15	> 40	≤ 1
				> 55	≤ 2
NS_10		20	15, 20	Table 6.2.4.3-3	Table 6.2.4.3-3
NS_11	6.6.2.2.1 6.6.3.3.13	231	1.4, 3, 5, 10,15,20	Table 6.2.4.3-5	Table 6.2.4.3-5
NS_12	6.6.3.3.5	26	1.4, 3, 5	Table 6.2.4.3-6	Table 6.2.4.3-6
NS_13	6.6.3.3.6	26	5	Table 6.2.4.3-7	Table 6.2.4.3-7
NS_14	6.6.3.3.7	26	10, 15	Table 6.2.4.3-8	Table 6.2.4.3-8
NS_15	6.6.3.3.8	26	1.4, 3, 5, 10, 15	Table 6.2.4.3-9 Table 6.2.4.3-10	Table 6.2.4.3-9, Table 6.2.4.3-10
NS_16	6.6.3.3.9	27	3, 5, 10	Table 6.2.4.3-11, Table 6.2.4.3-12, Table 6.2.4.3-13	
NS_17	6.6.3.3.10 6.6.3.3.11	28 28	5, 10	Table 5.4.2-1	N/A
			5	≥ 2	≤ 1
NS_18			10, 15, 20	≥ 1	≤ 4
NS_19			10, 15, 20	Table 6.2.4.3-15	Table 6.2.4.3-15
NS_20			5, 10, 15, 20	Table 6.2.4.3-14	Table 6.2.4.3-14
…					
NS_20	-	-	-	-	-

Any report having not been signed by authorized approver, or having been altered without authorization, or having not been stamped by the "Dedicated Testing/Inspection Stamp" is deemed to be invalid. Copying or excerpting portion of, or altering the content of the report is not permitted without the written authorization of AGC. The test results presented in the report apply only to the tested sample. Any objections to report issued by AGC should be submitted to AGC within 15days after the issuance of the test report. Further enquiry of validity or verification of the test report should be addressed to AGC by agc@agc-cert.com.

Bluetooth_V4.0(BR/EDR)

Modulation	Channel	Frequency(MHz)	Peak Power (dBm)
GFSK	0	2402	5.295
	39	2441	**6.666**
	78	2480	4.672
π /4-DQPSK	0	2402	4.465
	39	2441	5.836
	78	2480	3.739
8-DPSK	0	2402	4.556
	39	2441	5.933
	78	2480	3.792

Bluetooth_V4.0(BLE)

Modulation	Channel	Frequency(MHz)	Peak Power (dBm)
GFSK	0	2402	3.736
	19	2440	**5.057**
	39	2480	3.046

Any report having not been signed by authorized approver, or having been altered without authorization, or having not been stamped by the "Dedicated Testing/Inspection Stamp" is deemed to be invalid. Copying or excerpting portion of, or altering the content of the report is not permitted without the written authorization of AGC. The test results presented in the report apply only to the tested sample. Any objections to report issued by AGC should be submitted to AGC within 15days after the issuance of the test report. Further enquiry of validity or verification of the test report should be addressed to AGC by agc@agc-cert.com.

13. TEST RESULTS

13.1. SAR Test Results Summary

13.1.1. Test position and configuration

Head SAR was performed with the device configured in the positions according to IEEE 1528-2013, Body-worn and 4 Edges SAR was performed with the device 5mm from the phantom.

13.1.2. Operation Mode

1. Per KDB 447498 D01 v06 ,for each exposure position, if the highest 1-g SAR is ≤ 0.8 W/kg, testing for low and high channel is optional.
2. Per KDB 865664 D01 v01r04,for each frequency band, if the measured SAR is ≥0.8W/kg, testing for repeated SAR measurement is required , that the highest measured SAR is only to be tested. When the SAR results are near the limit, the following procedures are required for each device to verify these types of SAR measurement related variation concerns by repeating the highest measured SAR configuration in each frequency band.
   (1) When the original highest measured SAR is ≥0.8W/kg, repeat that measurement once.
   (2) Perform a second repeated measurement only if the ratio of largest to smallest SAR for the original and first repeated measurements is >1.20 or when the original or repeated measurement is ≥1.45 W/kg.
   (3) Perform a third repeated measurement only if the original, first and second repeated measurement is ≥1.5 W/kg and ratio of largest to smallest SAR for the original, first and second measurement is ≥ 1.20.
3. Body-worn exposure conditions are intended to voice call operations, therefore GSM voice call mode is selected to be test.
4. Per KDB 648474 D04 v01r03,when the reported SAR for a body-worn accessory measured without a headset connected to the handset is ≤1.2W/kg, SAR testing with a headset connected is not required.
5. Per KDB 941225 D06 V02r01, When the same wireless mode transmission configurations for voice and data are required for SAR measurements, the more conservative configuration with a smaller separation distance should be tested for the overlapping SAR configurations.
6. Maximum Scaling SAR in order to calculate the Maximum SAR values to test under the standard Peak Power, Calculation method is as follows:
   Maximum Scaling SAR =tested SAR (Max.) ×[maximum turn-up power (mw)/ maximum measurement output power(mw)]
7. Proximity sensor, just for avoiding the wrong operation in the phone screen when call, and has no influence on output power or SAR result
8. Per KDB 941225 D05v02r03, start with the largest channel bandwidth and measure SAR for QPSK with 1RB allocation using the RB offset and required test channel combination with highest maximum output power for RB offsets at the upper edge, middle and lower edge of each required test channel.
9. Per KDB 941125 D05v02r03, 50% RB allocation for QPSK SAR testing follows 1RB QPSK allocation procedure.
10. Per KDB 941125 D05v02r03. For QPSK with 100% RB allocation. SAR is not required when the highest maximum output power for 100% RB allocation is less than the highest maximum output power in 50% and 1RB allocation and the highest reported SAR is >1.45 W/kg, the remaining required test channels must also be tested.

Any report having not been signed by authorized approver, or having been altered without authorization, or having not been stamped by the "Dedicated Testing/Inspection Stamp" is deemed to be invalid. Copying or excerpting portion of, or altering the content of the report is not permitted without the written authorization of AGC. The test results presented in the report apply only to the tested sample. Any objections to report issued by AGC should be submitted to AGC within 15days after the issuance of the test report. Further enquiry of validity or verification of the test report should be addressed to AGC by agc@agc-cert.com.

11. Per KDB 941125 D05v02r03. 16QAM output power for each RB allocation configuration is not 1/2 dB higher than the same configuration in QPSK and the reported SAR for the QPSK configuration is ≤1.45W/kg, Per KDB 941225 D05v02r02, 16QAM SAR testing is not required.
12. Per KDB 941125 D05v02r03. Smaller bandwidth output power for each RB allocation configuration is >not 1/2 dB higher than the same configuration in the largest supported bandwidth, and the reported SAR for the largest supported bandwidth is ≤1.45W/kg. Per KDB 941125 D05v02r03, smaller bandwidth SAR testing is not required.

Any report having not been signed by authorized approver, or having been altered without authorization, or having not been stamped by the "Dedicated Testing/Inspection Stamp" is deemed to be invalid. Copying or excerpting portion of, or altering the content of the report is not permitted without the written authorization of AGC. The test results presented in the report apply only to the tested sample. Any objections to report issued by AGC should be submitted to AGC within 15days after the issuance of the test report. Further enquiry of validity or verification of the test report should be addressed to AGC by agc@agc-cert.com.

13.1.3. Test Result

SAR MEASUREMENT									
Depth of Liquid (cm):>15				Relative Humidity (%): 48.9					
Product: Feature phone									
Test Mode: GSM850 with GMSK modulation									
Position	**Mode**	**Ch.**	**Fr. (MHz)**	**Power Drift (<±5%)**	**SAR (1g) (W/kg)**	**Max. Tune-up Power (dBm)**	**Meas. output Power (dBm)**	**Scaled SAR (W/kg)**	**Limit (W/kg)**
SIM 1 Card									
Left Cheek	voice	190	836.6	-0.15	0.549	33.10	32.69	0.603	1.6
Left Tilt	voice	190	836.6	-0.02	0.315	33.10	32.69	0.346	1.6
Right Cheek	voice	190	836.6	0.06	**0.591**	33.10	32.69	**0.650**	1.6
Right Tilt	voice	190	836.6	-0.32	0.380	33.10	32.69	0.418	1.6
Body back	voice	190	836.6	0.05	**0.640**	33.10	32.69	**0.703**	1.6
Body front	voice	190	836.6	-0.28	0.424	33.10	32.69	0.466	1.6
Body back	GPRS-3 slot	190	836.6	0.11	**0.750**	30.50	30.28	**0.789**	1.6
Body front	GPRS-3 slot	190	836.6	-0.08	0.496	30.50	30.28	0.522	1.6
Edge 1 (Top)	GPRS-3 slot	190	836.6	0.15	0.037	30.50	30.28	0.039	1.6
Edge 2(Right)	GPRS-3 slot	190	836.6	-0.17	0.445	30.50	30.28	0.468	1.6
Edge 3(Bottom)	GPRS-3 slot	190	836.6	-0.42	0.403	30.50	30.28	0.424	1.6
Edge 4(Left)	GPRS-3 slot	190	836.6	0.30	0.574	30.50	30.28	0.604	1.6

Note:
· When the 1-g Reported SAR is ≤ 0.8 W/kg, testing for low and high channel is optional. Refer to KDB 447498.
·The test separation for body back, body front and 4 Edges is 5mm of all above table.

Any report having not been signed by authorized approver, or having been altered without authorization, or having not been stamped by the "Dedicated Testing/Inspection Stamp" is deemed to be invalid. Copying or excerpting portion of, or altering the content of the report is not permitted without the written authorization of AGC. The test results presented in the report apply only to the tested sample. Any objections to report issued by AGC should be submitted to AGC within 15days after the issuance of the test report. Further enquiry of validity or verification of the test report should be addressed to AGC by agc@agc-cert.com.

SAR MEASUREMENT									
Depth of Liquid (cm):>15				Relative Humidity (%): 45.3					
Product: Feature phone									
Test Mode: PCS1900 with GMSK modulation									
Position	**Mode**	**Ch.**	**Fr. (MHz)**	**Power Drift (<±5%)**	**SAR (1g) (W/kg)**	**Max. Tune-up Power (dBm)**	**Meas. output Power (dBm)**	**Scaled SAR (W/kg)**	**Limit (W/kg)**
SIM 1 Card									
Left Cheek	voice	661	1880.0	0.16	**0.335**	29.60	29.53	**0.340**	1.6
Left Tilt	voice	661	1880.0	-0.05	0.156	29.60	29.53	0.159	1.6
Right Cheek	voice	661	1880.0	0.32	0.334	29.60	29.53	0.339	1.6
Right Tilt	voice	661	1880.0	-0.05	0.171	29.60	29.53	0.174	1.6
Body back	voice	661	1880.0	-0.28	0.505	29.60	29.53	0.513	1.6
Body front	voice	661	1880.0	-0.42	**0.524**	29.60	29.53	**0.533**	1.6
Body back	GPRS-3 slot	661	1880.0	-0.11	0.593	26.90	26.85	0.600	1.6
Body front	GPRS-3 slot	661	1880.0	-0.06	**0.604**	26.90	26.85	**0.611**	1.6
Edge 1 (Top)	GPRS-3 slot	661	1880.0	-0.35	0.090	26.90	26.85	0.091	1.6
Edge 2(Right)	GPRS-3 slot	661	1880.0	-0.27	0.255	26.90	26.85	0.258	1.6
Edge 3(Bottom)	GPRS-3 slot	661	1880.0	0.42	0.526	26.90	26.85	0.532	1.6
Edge 4(Left)	GPRS-3 slot	661	1880.0	0.10	0.201	26.90	26.85	0.203	1.6

Note:
· When the 1-g Reported SAR is ≤ 0.8 W/kg, testing for low and high channel is optional. Refer to KDB 447498.
·The test separation for body back, body front and 4 Edges is 5mm of all above table.

Any report having not been signed by authorized approver, or having been altered without authorization, or having not been stamped by the "Dedicated Testing/Inspection Stamp" is deemed to be invalid. Copying or excerpting portion of, or altering the content of the report is not permitted without the written authorization of AGC. The test results presented in the report apply only to the tested sample. Any objections to report issued by AGC should be submitted to AGC within 15days after the issuance of the test report. Further enquiry of validity or verification of the test report should be addressed to AGC by agc@agc-cert.com.

SAR MEASUREMENT									
Depth of Liquid (cm):>15				Relative Humidity (%): 45.3					
Product: Feature phone									
Test Mode: WCDMA Band II with QPSK modulation									
Position	**Mode**	**Ch.**	**Fr. (MHz)**	**Power Drift (<±5%)**	**SAR (1g) (W/kg)**	**Max. Tune-up Power (dBm)**	**Meas. output Power (dBm)**	**Scaled SAR (W/kg)**	**Limit (W/kg)**
Left Cheek	RMC 12.2kbps	9400	1880	0.62	0.625	23.20	23.17	0.629	1.6
Left Tilt	RMC 12.2kbps	9400	1880	-0.07	0.223	23.20	23.17	0.225	1.6
Right Cheek	RMC 12.2kbps	9400	1880	0.32	**0.659**	23.20	23.17	**0.664**	1.6
Right Tilt	RMC 12.2kbps	9400	1880	-0.09	0.366	23.20	23.17	0.369	1.6
Body back	RMC 12.2kbps	9262	1852.4	-0.27	0.823	23.20	23.17	0.829	1.6
Body back	RMC 12.2kbps	9400	1880	0.41	0.946	23.20	23.17	0.953	1.6
Body back	RMC 12.2kbps	9538	1907.6	-0.08	0.746	23.30	23.23	0.758	1.6
Body front	RMC 12.2kbps	9262	1852.4	-0.16	1.172	23.20	23.17	1.180	1.6
Body front	RMC 12.2kbps	9400	1880	-0.52	1.107	23.20	23.17	1.115	1.6
Body front	RMC 12.2kbps	9538	1907.6	0.31	1.056	23.30	23.23	1.073	1.6
Edge 1 (Top)	RMC 12.2kbps	9400	1880	-0.05	0.319	23.20	23.17	0.321	1.6
Edge 2(Right)	RMC 12.2kbps	9400	1880	0.27	0.585	23.20	23.17	0.589	1.6
Edge 3(Bottom)	RMC 12.2kbps	9262	1852.4	-0.10	**1.390**	23.20	23.17	**1.400**	1.6
Edge 3(Bottom)	RMC 12.2kbps	9400	1880	-0.03	1.293	23.20	23.17	1.302	1.6
Edge 3(Bottom)	RMC 12.2kbps	9538	1907.6	0.04	1.153	23.30	23.23	1.172	1.6
Edge 4(Left)	RMC 12.2kbps	9400	1880	-0.27	0.515	23.20	23.17	0.519	1.6

Note:
· When the 1-g Reported SAR is ≤ 0.8 W/kg, testing for low and high channel is optional. Refer to KDB 447498.
·The test separation for body back, body front and 4 Edges is 5mm of all above table.

Any report having not been signed by authorized approver, or having been altered without authorization, or having not been stamped by the "Dedicated Testing/Inspection Stamp" is deemed to be invalid. Copying or excerpting portion of, or altering the content of the report is not permitted without the written authorization of AGC. The test results presented in the report apply only to the tested sample. Any objections to report issued by AGC should be submitted to AGC within 15days after the issuance of the test report. Further enquiry of validity or verification of the test report should be addressed to AGC by agc@agc-cert.com.

SAR MEASUREMENT									
Depth of Liquid (cm):>15				Relative Humidity (%): 48.9					
Product: Feature phone									
Test Mode: WCDMA Band V with QPSK modulation									
Position	**Mode**	**Ch.**	**Fr. (MHz)**	**Power Drift (<±5%)**	**SAR (1g) (W/kg)**	**Max. Tune-up Power (dBm)**	**Meas. output Power (dBm)**	**Scaled SAR (W/kg)**	**Limit (W/kg)**
Left Cheek	RMC 12.2kbps	4183	836.4	-0.11	**0.735**	23.00	22.93	**0.747**	1.6
Left Tilt	RMC 12.2kbps	4183	836.4	0.18	0.445	23.00	22.93	0.452	1.6
Right Cheek	RMC 12.2kbps	4183	836.4	0.06	0.705	23.00	22.93	0.716	1.6
Right Tilt	RMC 12.2kbps	4183	836.4	-0.23	0.439	23.00	22.93	0.446	1.6
Body back	RMC 12.2kbps	4183	836.4	-0.05	**0.747**	23.00	22.93	**0.759**	1.6
Body front	RMC 12.2kbps	4183	836.4	-0.27	0.702	23.00	22.93	0.713	1.6
Edge 1 (Top)	RMC 12.2kbps	4183	836.4	0.41	0.026	23.00	22.93	0.026	1.6
Edge 2(Right)	RMC 12.2kbps	4183	836.4	0.11	0.421	23.00	22.93	0.428	1.6
Edge 3(Bottom)	RMC 12.2kbps	4183	836.4	-0.16	0.184	23.00	22.93	0.187	1.6
Edge 4(Left)	RMC 12.2kbps	4183	836.4	-0.10	0.506	23.00	22.93	0.514	1.6

Note:
· When the 1-g Reported SAR is ≤ 0.8 W/kg, testing for low and high channel is optional. Refer to KDB 447498.
·The test separation for body back, body front and 4 Edges is 5mm of all above table.

Any report having not been signed by authorized approver, or having been altered without authorization, or having not been stamped by the "Dedicated Testing/Inspection Stamp" is deemed to be invalid. Copying or excerpting portion of, or altering the content of the report is not permitted without the written authorization of AGC. The test results presented in the report apply only to the tested sample. Any objections to report issued by AGC should be submitted to AGC within 15days after the issuance of the test report. Further enquiry of validity or verification of the test report should be addressed to AGC by agc@agc-cert.com.