TEKTELIC Communications Inc.
7657 10th Street NE Calgary, Alberta
Canada, T2E 8X2

KONA MEGA GEN3 GATEWAY

User Guide

Document Type:	**User Guide**
Document Number:	**T0009468_UG**
Document Issue:	1.2
Document Status:	Released
Product Name:	**KONA Mega Gen3 Gateway**
Product Code:	Table 1
Issue Date:	August 12, 2026

PROPRIETARY:
The information contained in this document is the property of TEKTELIC Communications Inc.
© 2026
TEKTELIC Communications Inc., all rights reserved.
All products, names, and services are trademarks and registered trademarks of their respective companies.

TEKTELIC Communications Inc.
7657 10th Street NE
Calgary, AB, Canada T2E 8X2
Phone: (403) 338-6900

Document Revision

Revision	Issue Date	Status	Comments
0.1	2025-11-03	Draft	
0.2	2025-11-11	Draft	Minor corrections after review
1.0	2025-11-28	Obsolete	Updated and Released
1.1	2026-01-30	Obsolete	Updated Table 1
1.2	2026-08-12	Released	• Updated Table 1 • Updated images in 1.2 • Updated secion 1.4

Table of Contents

1 Product Description 6
1.1 Overview 6
1.2 Bulkhead Layout 8
1.3 Specifications 11
1.4 Exposed Services 11
2 Installation 12
2.1 Safety Precautions 12
2.2 Unpacking and Inspection 13
2.3 Required Equipment for Installation 13
2.4 KONA Mega Gen3 Gateway Mounting 13
2.5 Ground Cable Installation 15
2.6 Direct DC Power Cable Installation 16
2.7 RF Cable Installation 16
2.8 Copper Ethernet Cable Installation 17
2.9 Proposition 65 Statement 17
3 Radio Compliance Statements 18

List of Tables

Table 1: KONA Mega Gen3 Gateway Models 6
Table 2: KONA Mega Gen3 Gateway Interface Connector Types 10
Table 3: KONA Mega Gen3 Gateway Specifications 11

List of Figures

Figure 1: KONA Mega Gen3 Gateway Common Dimensions 7
Figure 2: KONA Mega Gen3 Gateway, 2x LoRa, LTE backhaul..... 8
Figure 3: KONA Mega Gen3 Gateway, 1x LoRa, LTE backhaul (FUTURE) 8
Figure 4: KONA Mega Gen3 Gateway, 2x LoRa, Ethernet backhaul only 9
Figure 5: KONA Mega Gen3 Gateway, 1x LoRa, Ethernet backhaul only (FUTURE)..... 9
Figure 6: KONA Module with Mounting Bracket 14
Figure 7: Chassis Ground Connection 15
Figure 8: Direct DC Power Connection Polarity 16

1 Product Description

1.1 Overview

The KONA Mega Gen3 Gateway is a LoRaWAN IoT gateway. The gateway platform is designed to support a multitude of deployment configurations in an outdoor environment. The hardware architecture supports up to two LoRa antennas, a GPS antenna, direct DC input power or Power over Ethernet (PoE), copper Ethernet backhaul, and optional 3G/4G wireless backhaul. Table 1 presents the currently available KONA Mega Gen3 Gateway models.

Table 1: KONA Mega Gen3 Gateway Models

Region	Gateway Model No.	Channel Plan	Radio PCBA	Filter(s)	LoRa Ant	Cellular Backhaul
North America	T0009532	Custom	T0009347	T0009450 Rx: 902-919.2 MHz Tx: 923-928 MHz	2	Yes
	T0009627	US915	T0009378	T0004144 Rx: 902-915 MHz Tx: 923-928 MHz	1	No
	T0009626		T0009347		1	Yes
	T0009519		T0009378		2	No
	T0009520		T0009347		2	Yes
Europe	T0009630	EU868	T0009379	T0007842 863-870 MHz	1	No
	T0009629		T0009348		1	Yes
	T0009523		T0009379		2	No
	T0009524		T0009348		2	Yes

Figure 1 illustrates the common Gateway external form-factor. The differences between the options are limited to the bulkhead field.

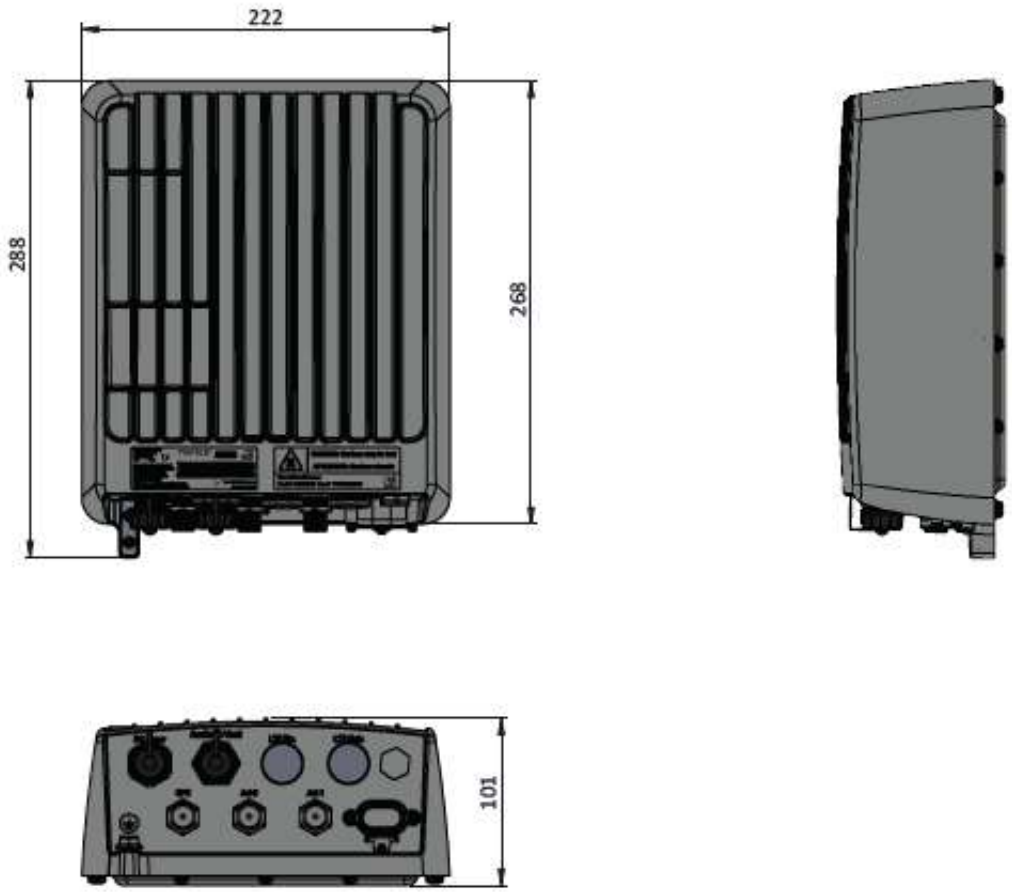

Figure 1: KONA Mega Gen3 Gateway Common Dimensions

1.2 Bulkhead Layout

The KONA Mega Gen3 Gateway bulkhead component fields are detailed in the following figures.

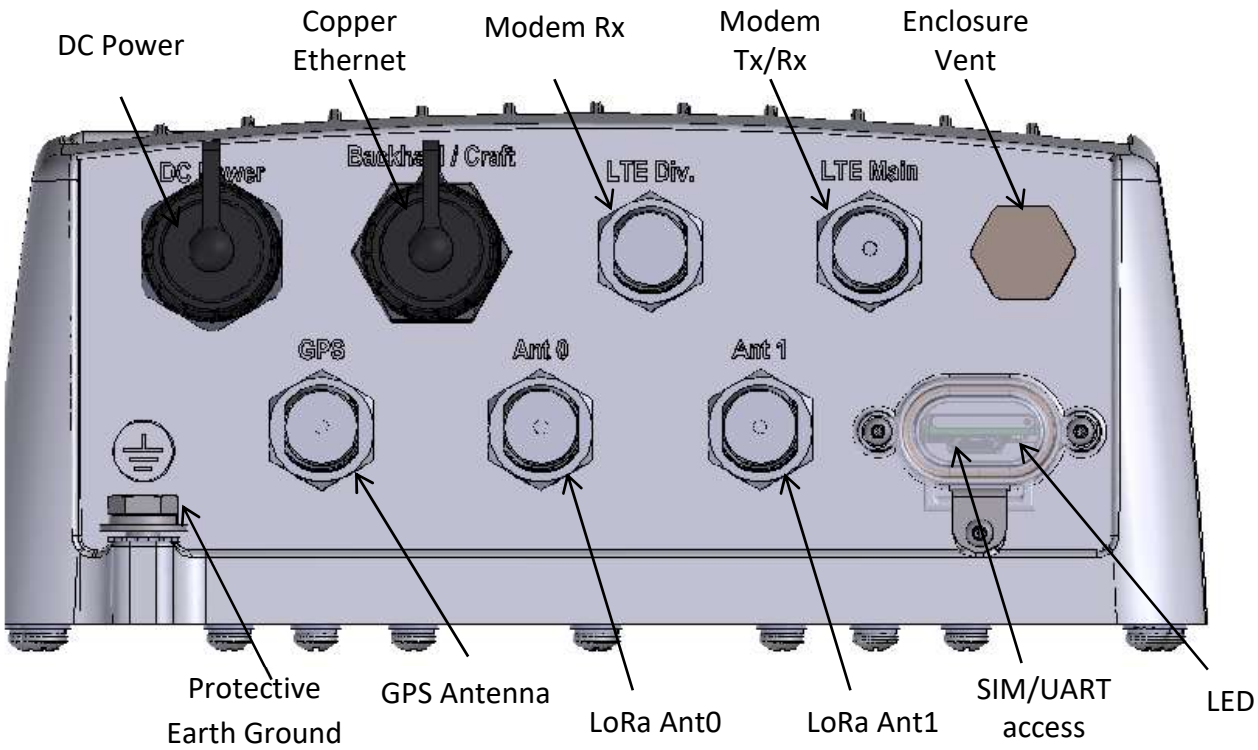

Figure 2: KONA Mega Gen3 Gateway, 2x LoRa, LTE backhaul

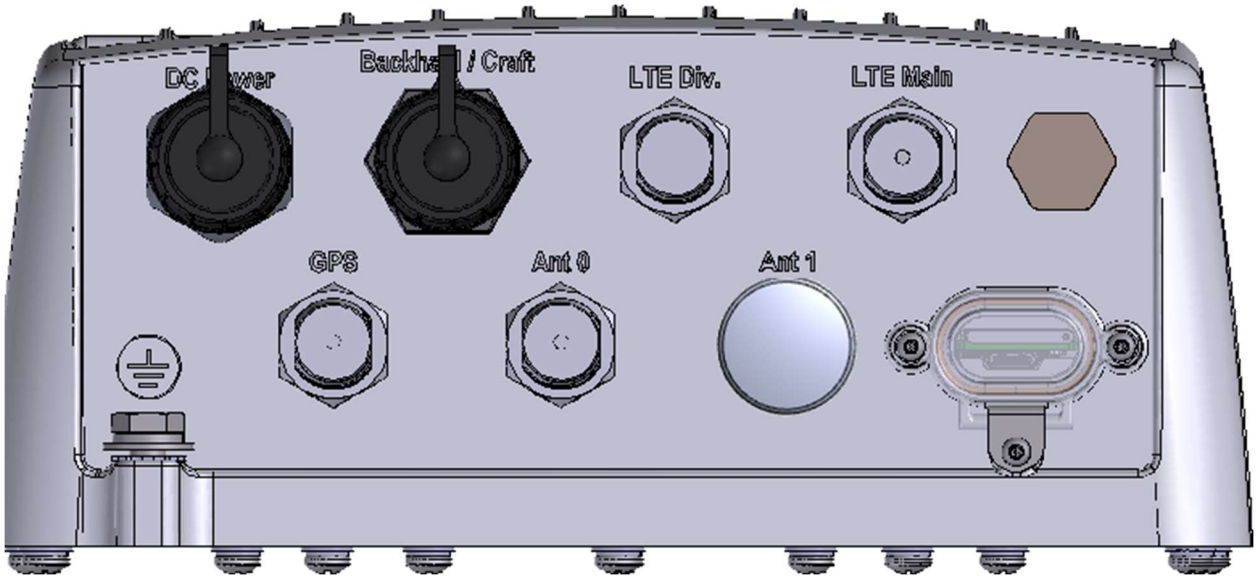

Figure 3: KONA Mega Gen3 Gateway, 1x LoRa, LTE backhaul

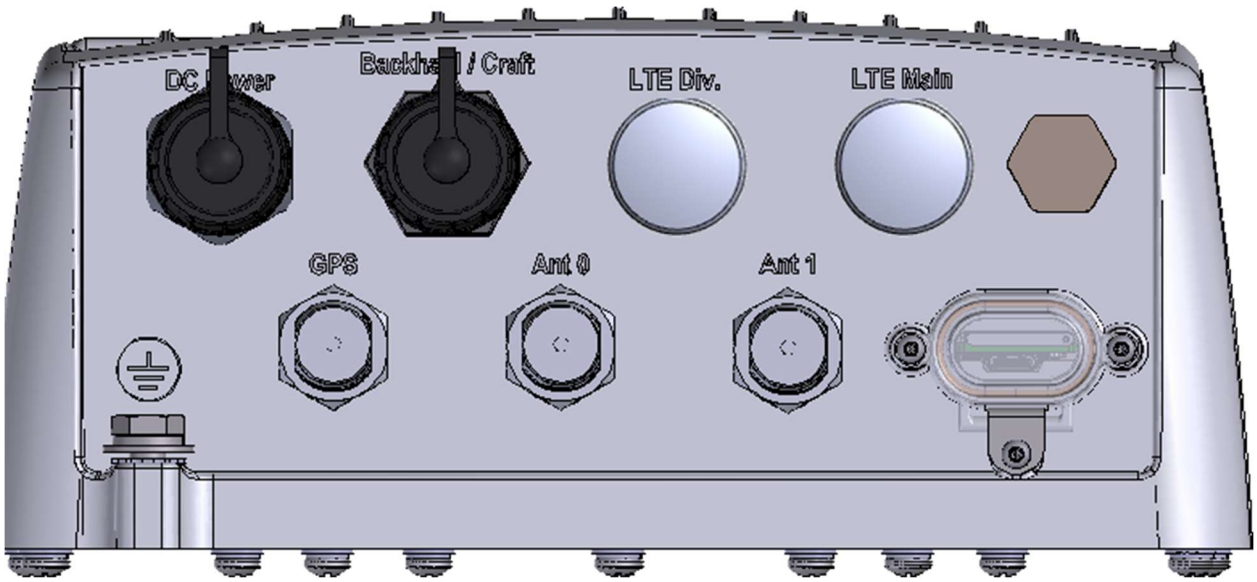

Figure 4: KONA Mega Gen3 Gateway, 2x LoRa, Ethernet backhaul only

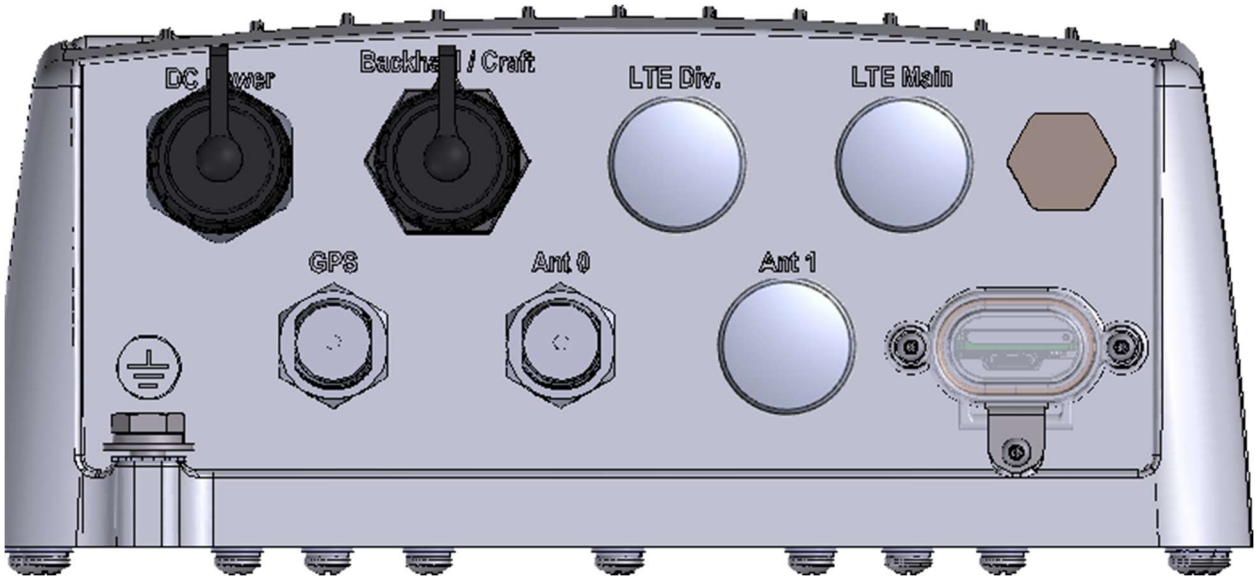

Figure 5: KONA Mega Gen3 Gateway, 1x LoRa, Ethernet backhaul only

All KONA Gateway module interconnects are located on the bottom facing bulkhead. The RF connectors are water proof while un-mated but all other connectors must be terminated with mating connectors or covered with the supplied protective cap when not in use in order to be water tight. Connector types and their mating connectors are listed in Table 2.

Table 2: KONA Mega Gen3 Gateway Interface Connector Types

Interface	Connector Type	Mating Connector
LoRa Antenna	N-Type female	Industry standard N-Type male
Cellular Antenna	N-Type female	Industry standard N-Type male
GPS Antenna	N-Type female	Industry standard N-Type male
Copper Ethernet (CPC connector)	Circular plastic threaded, RJ-45	Shenzhen Chogori Technology Co., Ltd. Approved mating connector (p/n 33000111-02 or equivalent)
DC Power Input (CPC connector)	Circular plastic threaded, 2 contact, DC power	Shenzhen Chogori Technology Co., Ltd. Approved mating connector (p/n 23002211-02 or equivalent)
Earth Ground	1/4 - 20 UNC double hole	Industry standard 2-hole lug, 1/4 x 0.75” spacing

1.3 Specifications

The KONA Mega Gen3 Gateway specifications are listed in Table 3.

Table 3: KONA Mega Gen3 Gateway Specifications

Attribute	Specification
Dimensions	222 mm (8.7”) wide x 101mm (4.0”) deep x 287 mm (11.3”) tall
Weight	5.1 kg (11.3 lbs)
Operating Temperature	-40°C to 60°C (-40°F to 140°F) at sea level Including solar loading.
Relative Humidity	10% to 100%
Operating Altitude	-60 m to 4,000 m (-197 ft to 13,123 ft)
Power Input, Direct DC	48 VDC nominal, 37 to 57 VDC operating range (after 42 V maximum start-up threshold). Positive or negative ground referenced feed. SELV & LPS source required. Maximum 10A input overcurrent protection.
Power Input, PoE	IEEE 802.3 at over all four pairs (Mode A + Mode B) required
Power Consumption	35 W maximum
Weather Tightness	UL Type 6 (IP-67)
Regulatory Compliance[1]	FCC, ISED, CE, CE (RED)
Surge Protection	All interfaces are protected to primary levels except for the 3G/4G modem antenna port which supports local antenna mounting only or requires an external surge suppressor.

1.4 Exposed Services

The following services are exposed in factory default state:

- SSH (TCP port 22) – Provides secure command-line access to the equipment.
- SNMPv3 (UDP port 161) – Secure management and monitoring with encryption and authentication.
- mDNS (UDP port 5353) – Enables local service discovery, allowing the use of user-friendly domain names when addressing the equipment, limited to the local network scope.
- ICMP (Ping) – Basic connectivity and availability check.
- HTTPS (TCP port 443) – Provides secure access to the web management interface using TLS encryption.

[1] In Progress

2 Installation

2.1 Safety Precautions

- Installation, operation, and maintenance of the KONA Mega Gen3 Gateway must only be performed by a professionally trained service technician who is aware of all hazards involved.
- The KONA Mega Gen3 Gateway must be installed in a restricted access location (such that touching of the Gateway by non-service persons is not likely).
- The KONA Mega Gen3 Gateway may become hot to the touch during normal operation at elevated ambient temperatures. The surface temperature of the Gateway may reach 90°C.
- The KONA Mega Gen3 Gateway has no internal field serviceable parts. The Gateway module must only be opened by an approved TEKTELIC service center.
- All installation practices must be in accordance with the local and national electrical codes.
- Do not work on the system during periods of lightning activity.
- The KONA Mega Gen3 Gateway is considered permanently connected equipment. The Protective Earth Ground connection (that is, the two-hole lug to chassis ground) is always required.
- Ensure the KONA Mega Gen3 Gateway Protective Earth Ground connection is properly terminated prior to the connection of any other interfaces.
- The KONA Mega Gen3 Gateway contains primary lightning surge suppression on the Direct DC power port, the Copper Ethernet port, the GPS antenna port and the LoRa RF antenna ports. The primary lightning protectors have the ability to bridge the interface isolation boundary during over-voltages. Ensure that the Protective Earth Ground connection is always in place.
- Ensure that the KONA Mega Gen3 Gateway, its antennas and supporting structures are properly secured to eliminate any physical hazard to people or property. The Gateway must be securely mounted according to the mounting instructions prior to any cable connection and operation.
- The KONA Mega Gen3 Gateway does not contain a power supply disconnection device; a readily accessible disconnection device must be incorporated external to the KONA Mega Gen3 Gateway.
- The direct DC powered KONA Mega Gen3 Gateway shall be supplied through an input overcurrent protection device rated not more than 10 A. The overcurrent protection must

have the appropriate current interrupt capacity for the power source and must be incorporated into the non-earthed conductor(s) of the KONA Mega Gen3 Gateway DC supply.

- For the direct DC power feed option, the DC positive pin must be at positive potential relative to the DC negative pin. If the polarity is reversed, the unit will not sustain damage but will not operate until the connection polarity is corrected.
- Although the KONA Mega Gen3 Gateway can be powered through either a direct DC input or through power over Ethernet (PoE), simultaneous application of power to both inputs may result in unexpected operation and shall be avoided.
- The KONA Mega Gen3 Gateway power source must meet SELV requirements.

2.2 Unpacking and Inspection

The following should be considered during the unpacking of a new KONA Mega Gen3 Gateway.

1. Inspect the shipping carton and report any significant damage to TEKTELIC.
2. Unpacking should be conducted in a clean and dry location when possible.
3. Do not discard the shipping box or foam inserts as they will be required if a unit is returned for repair or re-configuration.

2.3 Required Equipment for Installation

The following tools are required to install the KONA Mega Gen3 Gateway module:

1. A 6 point metric socket set and torque wrench drive.
2. Anti-oxidant compound (NO-OX-ID, Penetrox, Noalox, Ox-Gard or equivalent).
3. A small wire brush.
4. A clean cloth.
5. Weatherproofing tape kit for the RF connectors (Scotch Wireless Weatherproofing Kit, WK-101 recommended).
6. Appropriately sized pipe clamps for pole mounting or appropriate screws or bolts (four sized M8) with any required anchors according to the wall construction for wall mounting.

2.4 KONA Mega Gen3 Gateway Mounting

KONA Mega Gen3 Gateway is designed to be mounted to a vertical pole or wall using a mounting bracket. The mounting bracket is a single part that bolts to the back surface of the Gateway using supplied hardware (four M6x1.0 - 14 mm bolts with flat and star lock washers) as illustrated in Figure 6. The Gateway module must be oriented with the connector bulkhead facing down, towards earth.

Ensure that the structure to which the Gateway is being mounted is secure and able to support a dead load of at least 136 kg (300 lbs). The area below must be free of any obstructions to cable ingress.

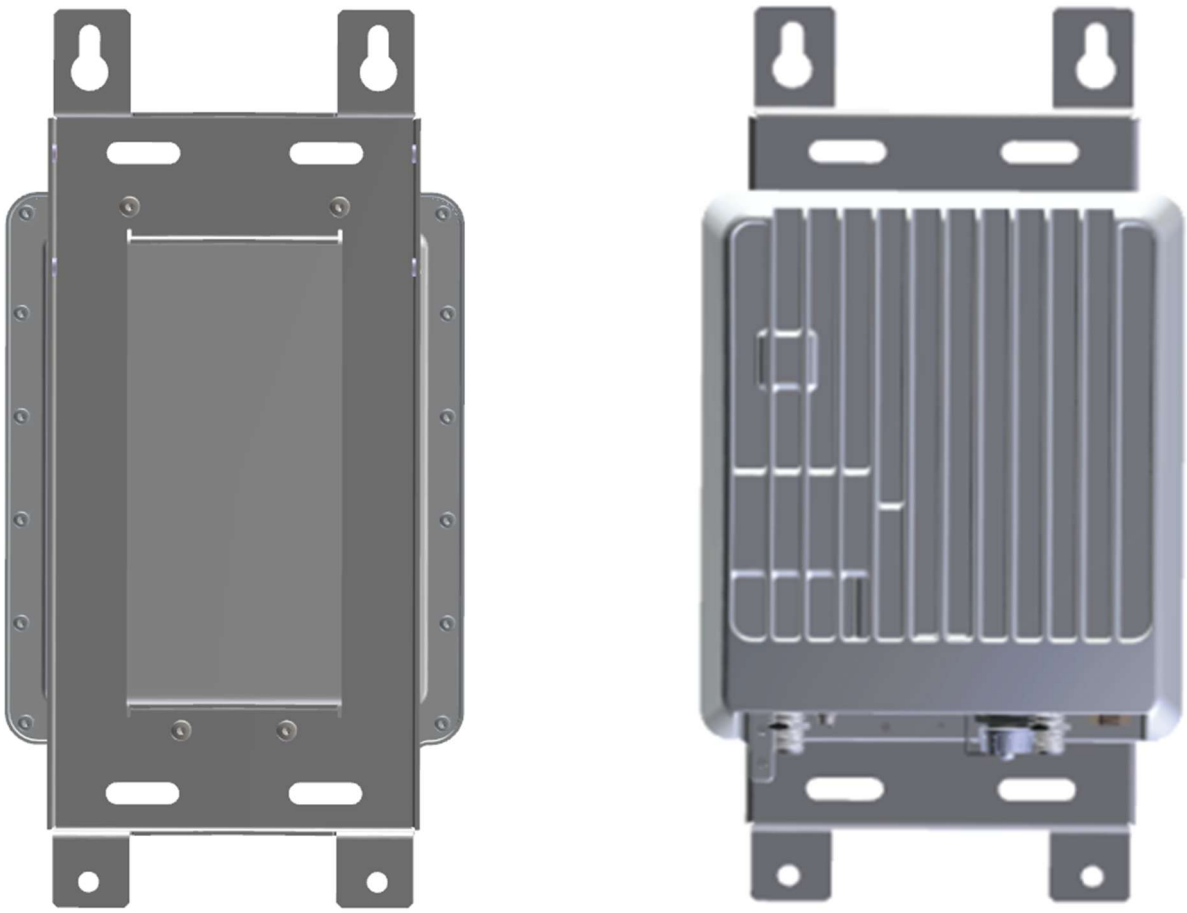

Figure 6: KONA Module with Mounting Bracket

The KONA Mega Gen3 Gateway wall mounting procedure is as follows:

1. Bolt the wall mounting bracket to the Gateway module using the supplied bolts and washers.
2. Install 2 site supplied M8 bolts into the wall at 139.7 mm (5.5”) center spacing, leaving the bold heads protruding with a 2mm gap from the wall surface.
3. Hang the KONA Mega Gen3 Gateway with bracket from the two bolts by inserting the keyhole slots at the top of the bracket onto the 2 bolts and tightening the bolts.
4. Insert and tighten two additional site supplied M8 bolts through the holes at the bottom of the bracket.

The KONA Mega Gen3 Gateway pole mounting procedure is as follows:

1. Bolt the wall mounting bracket to the Gateway module using the supplied bolts and washers.
2. While temporarily supporting the Gateway with bracket, install the two site supplied pipe clamps, one through each of the upper and lower slotted clamp mounting points.

2.5 Ground Cable Installation

The KONA Mega Gen3 Gateway is considered Permanently Connected Equipment and requires a permanently connected Protective Earth Ground (PEG) conductor. The Protective Earth Ground connection is made through a 1/4 x 0.75” on center double hole lug to the ground termination point illustrated in Figure 7. The ground cable gauge shall be #10 AWG minimum.

The KONA Mega Gen3 Gateway grounding system shall follow local and national electrical codes. The Protective Earth Ground conductor terminated at the double hole lug point is mandatory and must be the first connection made to the KONA Mega Gen3 Gateway during installation. Proper routing and termination of this cable is key to robust lightning withstand performance; in high susceptibility installations, every effort shall be made to minimize connection inductance and ground bed resistance.

The ground cable installation steps are as follows:

1. Lightly abrade the surface of the casting ground area with a fine wire brush to remove the oxide layer.
2. Use a clean cloth to remove any debris from this surface.
3. Immediately coat the contact surface with a thin layer of anti-oxidant compound.
4. Install the ground cable through its 2-hole lug onto the chassis ground point using the two supplied 1/4 - 20 x 1/2” bolts with flat and star lock washers, torqued to 10.4 Nm (92 in·lbs).

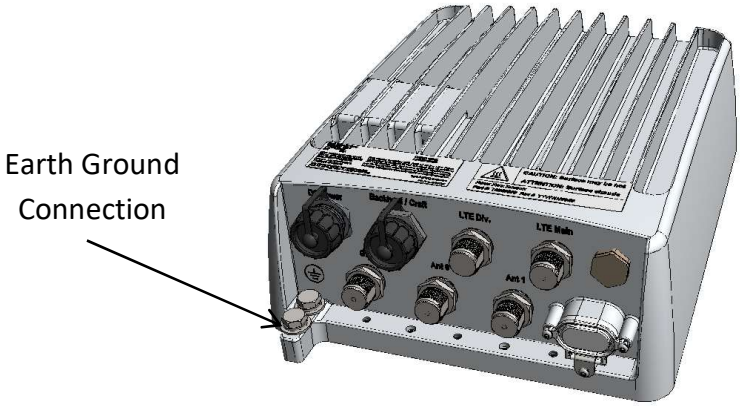

Figure 7: Chassis Ground Connection

2.6 Direct DC Power Cable Installation

Depending on the model, the KONA Mega Gen3 Gateway direct DC feed may terminate at a dedicated two pin circular plastic connector (CPC) or a two pin M12 circular metal connector. In either case the direct DC power input is isolated from chassis (earth) with the exception of the primary surge suppressors. One lead of the DC power feed is normally earth referenced external to the KONA Mega Gen3 Gateway (usually at the power source by convention).

The DC power cable shall be rated for outdoor application and in accordance with local and national electrical codes.

The CPC DC connector shall be as specified in Table 2 and shall follow the signal polarity identified in Figure 8.

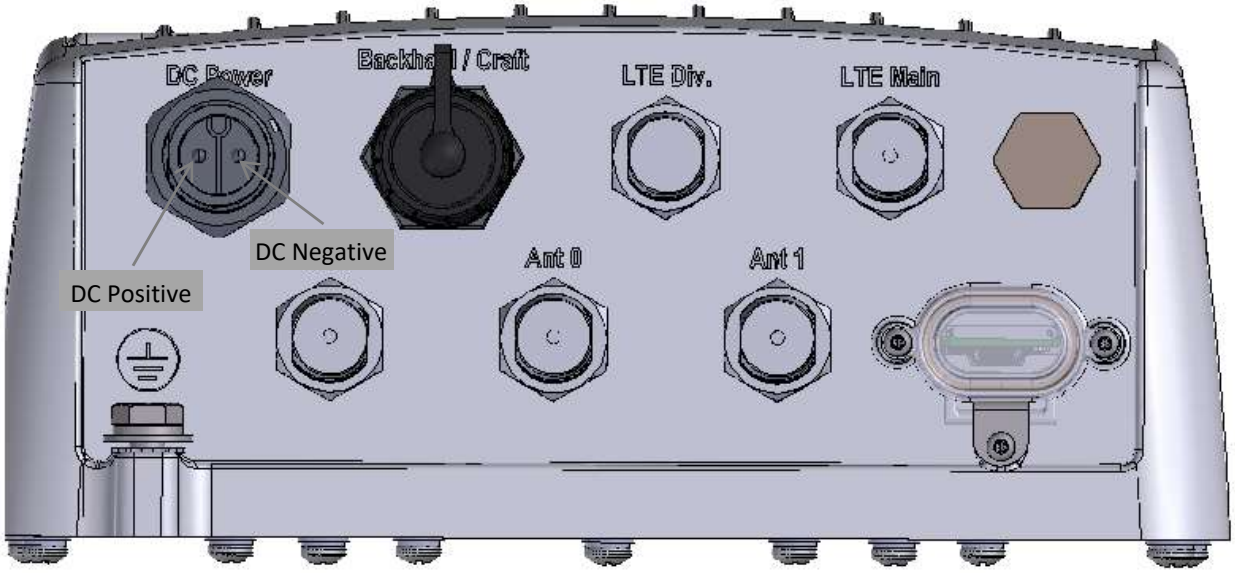

Figure 8: Direct DC Power Connection Polarity

2.7 RF Cable Installation

The Gateway installation will require connection to a GPS antenna, up to two LoRa RF antennas, and optionally 3G/4G modem antennas. The RF cables attach to the N-Type connectors on the bottom of the KONA Mega Gen3 Gateway. Torque the connectors to 1.7 to 2.3 Nm (15 to 20 in·lbs). The N-Type connector interface to a cable is not water proof and must be taped to be used outdoors. TEKTELIC recommends taping with Scotch Wireless Weatherproofing Kit, WK-101. Follow the taping procedures outlined by the supplier of this tape system.

The Gateway, by nature of its deployment, is expected to have a high level of lightning exposure. All RF ports have primary levels of surge protection integrated in the Gateway module which includes:

- LoRa RF antenna ports
- Cellular RF antenna ports
- GPS RF antenna port

2.8 Copper Ethernet Cable Installation

The KONA Mega Gen3 Gateway Ethernet port may be used on a temporary basis for commissioning and maintenance or may be permanently connected for backhaul. When the port is not in use, the weatherproof protective cap must be installed. When the port is permanently connector for backhaul, a proper water-tight mating connector specified in Table 2 must be used.

The Ethernet cable must have minimum 24 AWG conductors and shall be rated for outdoor application according to local and national electrical codes.

The Ethernet port is equipped with primary surge protection.

2.9 Proposition 65 Statement

⚠️ WARNING: This product can expose you to chemicals including lead, beryllium & nickel, which are known to the State of California to cause cancer, birth defects or other reproductive harm. For more information, go to www.P65Warnings.ca.gov.

3 Radio Compliance Statements

Federal Communications Commission

This device complies with Part 15 of the FCC Rules. Operation is subject to the following two conditions:

1. This device may not cause harmful interference, and
2. This device must accept any interference received, including interference that may cause undesired operation.

Changes or modifications not expressly approved by the party responsible for compliance could void the user's authority to operate the equipment

This equipment has been tested and found to comply with the limits for a Class B digital device, pursuant to Part 15 of the FCC Rules. These limits are designed to provide reasonable protection against harmful interference in a residential installation. This equipment generates uses and can radiate radio frequency energy and, if not installed and used in accordance with the instructions, may cause harmful interference to radio communications. However, there is no guarantee that interference will not occur in a particular installation. If this equipment does cause harmful interference to radio or television reception, which can be determined by turning the equipment off and on, the user is encouraged to try to correct the interference by one of the following measures:

- Reorient or relocate the receiving antenna.
- Increase the separation between the equipment and receiver.
- Connect the equipment into an outlet on a circuit different from that to which the receiver is connected.
- Consult the dealer or an experienced radio/TV technician for help.

To comply with FCC/IC RF exposure limits for general population / uncontrolled exposure, the antennas used for this transmitter must be installed to provide a separation distance of at least 80 cm from all persons and must not be co-located or operating in conjunction with any other antenna or transmitter.

Industry Canada

This Device complies with Industry Canada License-exempt RSS standard(s). Operation is subject to the following two conditions:

1. This device may not cause interference, and
2. This device must accept any interference, including interference that may cause undesired operation of the device.

This radio transmitter (certification number) has been approved by Industry Canada to operate with the antenna types listed below with the maximum permissible gain indicated. Antenna types not included in this list, having a gain greater than the maximum gain indicated for that type, are strictly prohibited for use with this device.

The required antenna impedance is 50 ohms.

Only antenna with maximum gain of 8dBi can be used for the LoRa radios of this product if the cable insertion loss at 900 MHz is 0.5dB or more for 1 carrier operation at 28.5 dBm. Antenna(s) shall be installed to location providing a separation distance of at least 31.5 inches (80 cm) from any human body.

During product operation, always keep a separation distance of at least 31.5 inches (80 cm) from any connected antenna(s). Before servicing the product, the antenna(s) or cables, turn off the transmission function or the unit power if you have to get closer than the minimum separation distance.

The 3G/4G modem antenna maximum allowed gain including cable loss shall be in accordance with the following table:

Technology	Band	Frequency (MHz)	Maximum Antenna Gain (dBi)
LTE	2	1850–1910	3.0
	4	1710–1755	6.0
	5	824–849	3.0
	13	777–787	6.0
	17	704–716	6.0
	25	1850–1915	3.0
UMTS	2	1850–1910	3.0
	4	1710–1755	6.0
	5	824–849	3.0
GSM	850	824–849	3.0
	1900	1850–1910	3.0
CDMA	BC0	824–849	3.0
	BC1	1850–1910	3.0
	BC10	817–824	3.0

Industrie Canada

Cet appareil est conforme aux normes RSS d'Industrie Canada exemptées de licence. Son fonctionnement est soumis aux deux conditions suivantes:

1. Cet appareil ne doit pas provoquer d'interférences et
2. Cet appareil doit accepter toute interférence, y compris les interférences pouvant entraîner un fonctionnement indésirable de l'appareil.

Cet émetteur radio (numéro de certification) a été approuvé par Industrie Canada pour fonctionner avec les types d'antennes énumérés ci-dessous avec le gain maximal autorisé indiqué. Les types d'antennes non inclus dans cette liste, ayant un gain supérieur au gain maximal indiqué pour ce type, sont strictement interdits avec ce périphérique.

L'impédance d'antenne requise est de 50 ohms.

Seule une antenne avec un gain maximal de 8dBi peut être utilisée pour les radios LoRa de ce produit si la perte d'insertion de câble à 900 MHz est de 0,5dB ou plus pour une opération de porteuse à 28,5 dBm. Une ou plusieurs antennes doivent être installées à un emplacement situé à au moins 31,5 pouces (80 cm) de tout corps humain.

Pendant le fonctionnement du produit, conservez toujours une distance de séparation d'au moins 31,5 cm (80 cm) de toute antenne connectée. Avant de réparer le produit, la ou les antennes ou les câbles, désactivez la fonction de transmission ou la puissance de l'unité si vous devez vous rapprocher de la distance de séparation minimale.

Le gain maximal admissible de l'antenne du modem 3G / 4G, y compris la perte de câble, doit être conforme au tableau suivant:

Technology	Band	Frequency (MHz)	Gain maximum d'antenne (dBi)
LTE	2	1850–1910	3.0
	4	1710–1755	6.0
	5	824–849	3.0
	13	777–787	6.0
	17	704–716	6.0
	25	1850–1915	3.0
UMTS	2	1850–1910	3.0
	4	1710–1755	6.0
	5	824–849	3.0
GSM	850	824–849	3.0
	1900	1850–1910	3.0
CDMA	BC0	824–849	3.0
	BC1	1850–1910	3.0
	BC10	817–824	3.0