Professional Wireless Weather Station

User Manual

1.Introduction.....3
2.Warnings and Cautions.....3
3.Getting Started.....3
3.1 Parts List.....3
3.2 Recommend Tools.....6
3.3 Sensor Assembly Set Up.....6
3.3.1 Install Integrated Outdoor Sensor Battery 6
3.4 Display Console.....10
3.4.1 Layout of Display Console.....10
3.4.2 Setup the Display Console 11
3.4.3 Connect Sensor with Display Console.....13
3.5Sensor Operation Verification.....14
4. Sensor Pre-Installation.....14
4.1Test the Sensor Before Installation.....14
4.2Site Survey Before Installation.....15
4.3 Best Practices for Wireless Communication.....15
5.Final Installation of Sensor.....17
5.1 Integrated outdoor SensorInstallation.....17
6.Low Battery Icon.....22
7. Display Console Operation.....22
7.1 Quick Display Mode.....22
7.2 Set (Program) Mode.....23
7.3 Sensor Search Mode.....26
7.4Max/Min Viewing and Reset Mode.....26
7.5 Snooze Mode.....27
7.6 Backlight Mode.....28

8.Alarm Mode.....29
8.1 Alarm Triggered.....29
8.2 View High/Low Alarm Value.....29
8.3 Setting the Alarms.....30
8.4 Alarm andKey Beeper ON/OFF.....32
9. Optional Calibration Mode.....32
9.1 Calibration of Temperature Mode.....33
9.2 Calibration of Humidity Mode.....34
9.3 Calibration of Sensors Mode.....35
10.Other Features of Display Console.....39
10.1 Weather Forecasting.....39
10.2 Weather Icons.....39
10.3 Moon Phase.....40
10.4 Feels LikeTemperature 41
10.5 Pressure Threshold Setting.....43
10.6 Restore Factory Default.....43
11. Maintenance.....43
12.Trouble Shooting Guide.....45
13. Specifications.....48
13.1 Measurement Specifications……48
13.2 Power Consumption……...…….49

1.Introduction

Thank you for your purchase of the Professional Wireless Weather Station. The following user guide provides step by step instructions for installation, operation and troubleshooting.

2.Warnings and Cautions

⚠**Warning:** Any metal object may attract a lightning strike, including your weather station mounting pole. Never install the weather station in a storm.

⚠**Warning:** Installing your weather station in a high location may result in injury or death. Perform as much of the initial check out and operationon the ground and inside a building or home. Only install the weather station on a clear, dry day.

3.Getting Started

The professional weather station consists of a display console, a sensor array with Integrated Outdoor Sensor, and mounting hardware.

3.1 Parts List

The weather station consists of the following parts (as referenced in Figure 1).

QTY	Item	Image
1	**Display Console** **Frame Dimensions** :6.5X 5.32X 0.71inch(165×135×18mm） **LCD Dimensions:** 5.12 x 316inch(130×80mm)	
1	**Integrated Outdoor Transmitter** **Dimensions**: 13x11x5.9 inch (330x280x150mm)	
1	**FootMounting (with pole insert)** **Dimensions:**4x3x1.5inch (101x76x37mm)	
1	**Mounting Bracket Back Plate (pole mount)Dimensions:**3x2.96x0.79inch (76x75x20mm)	

QTY	Item	Image
1	**Mounting PoleDimensions:**11.8x1.18x0.79inch (300x30x20mm)	
2	Pole mounting nuts (M3) / bolts Ø3)	
4	Pole mounting nuts (M5) / bolts (Ø5)	
4	Tapping screws	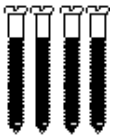

QTY	Item	Image
1	Manual	
1	Power Adapter	

Figure 1

3.2 Recommend Tools

- Precision screwdriver (for small Phillips screws)
- Compass or GPS (for wind direction calibration)
- Adjustable Wrench .

3.3 Sensor Assembly Set Up

Note: The outdoor sensor array must be powered and updating before powering up the console, or the console will stop scanning and connecting with the sensors.

The following illustration shows the full segment of integrated outdoor sensor, Wind and Rain, as shown in Figure 2.

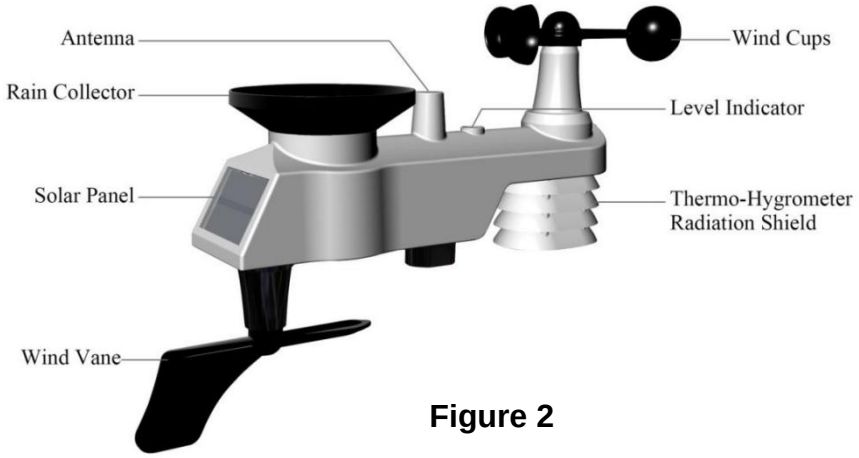

Figure 2

3.3.1 Install Integrated Outdoor Sensor Battery.

Locate the battery door on the bottom of transmitteras show in Figure 3.

📝 **Note: Do not install the batteries backwards.** You can permanently damage the outdoor sensors. The solar panel does not charge the batteries, so rechargeable batteries are not recommended.

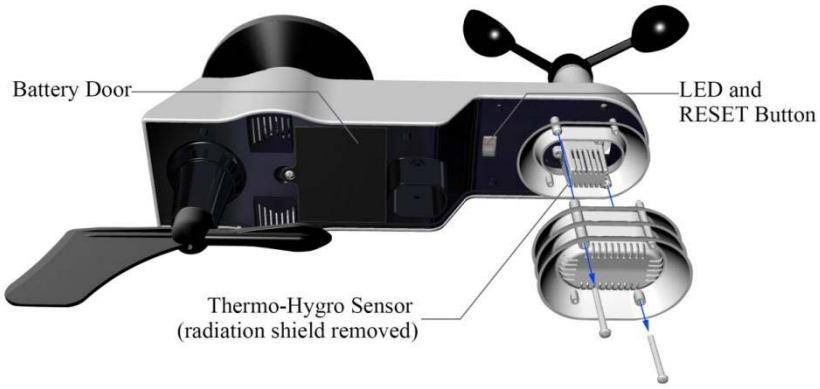

Figure 3

Remove the battery door on the back of the sensor by removing the set screw, as show in Figure 4.

Figure 4

Inserting 3AA fresh batteries as show in Figure 5**.** Close the battery door. Make sure that the gasket (around the battery compartment) is properly seated in its trace prior to closing the door and Tighten the set screw.

📝 **Note:** We recommend installing Lithium AA batteries for outdoor sensors in cold weather environments

The Integrated outdoor sensor LED indicator(White button) will light for 3 seconds, and then flash once per 16 seconds thereafter. Each time it flashes, the sensor is transmitting data.

Figure 5

📝 **Note:** If the sensor does not power up after inserting the batteries, press the reset button as shown in Figure 6.

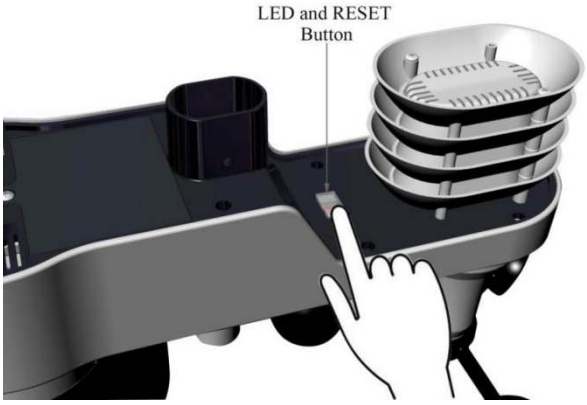

Figure 6

3.4 Display Console

3.4.1 Layout of Display Console

The following illustration shows the segment of LCD display for feature description purposes onlyin Figure 7.

.

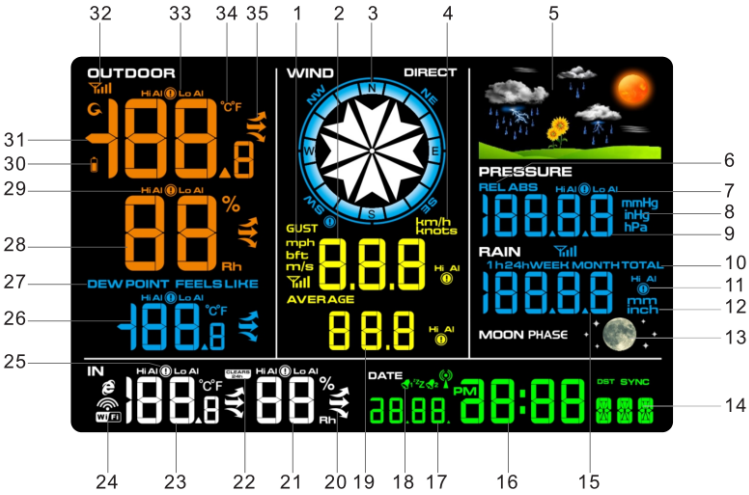

Figure 7

1) Wind speed units of measure 2) Wind gust display 3) Wind direction 4) Wind gust hi alarm 5) Weather forecast 6) Relative and absolute pressure 7) PressureHI/LO alarm icon 8) Pressure units of measure 9) Pressure (REL and ABS) display 10) Rainfall relative time 11) RainfallHI alarm icon 12) Rainfall units of measure 13) MOON phase 14) Week 15) Rainfall display(1h, 24h,WEEK,MONTH, TOTAL) 16) Time 17) Date 18) Time alarm icon 19) Wind speed average display	20) Indoor humiditychange indication 21) Indoor humidity display 22) Min/Max reset for 24h icon 23) Indoor temperature display 24) WIFI network 25) Indoor temperature HI/LO alarm icon 26) Outdoor dew point and feels liketemperaturedisplay 27) Outdoor dew point and feels like icon 28) Outdoor humidity display 29) Outdoor humidity HI/LO alarm 30) Battery low voltage icon 31) Outdoor temperature display 32) Signal acceptance flag 33) Outdoor temperature HI/LO alarm 34) Temperature units (°F or °C) 35) Outdoor temperature change indication

3.4.2 Setup the Display Console

1. Plug in the display console with power adapter.

BL ON will display in the time area for three seconds when powered up.Conversely, The **AC OFF** icon will display .

Note: It is recommended to plug in the power adapter to reduce the battery consumption and extend the service life.

2. Display Console Batteries Installation

Remove the battery door on the back of the display, as shown in Figure 8. Install three AAA (alkaline or lithium)) batteries. The display will beep once and layout of display will light up for a few seconds to verify all segments are operating properly.

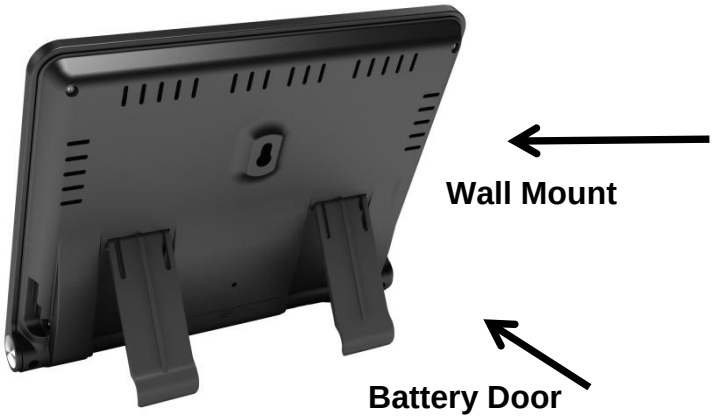

Figure 8

Replace the battery door, and unfold out the desk stand to place the console in the upright position.

Note: The battery is a back-up of weather station console, saving console settings when powered off from adaptor

3.4.3 Connect Sensor with Display Console

Once the display console is powered up, it will automatically scan all the nearby Integrated Outdoor sensors.

Note: Do not press any button until all the remote sensors report in the display screen, otherwise the display console will terminate to connect with remote sensors.

Note: While in the search mode, the remote search icon will be constantly displayed until all the measured values received. The console will automatically switch to the normal mode from which all further settings can be performed.

When connected with the Integrated Outdoor Sensor, the measured value (Indoor temperature,humidity,pressure,moon phase,time,wind speed,wind gust,wind direction,rain,outdoor temperature and humidity) will show up on the display console.

Note: Make sure that the distance between weather station sensorsand display console should be within 10ft (3m) to 100ft (30m). If the weather station sensors is too close or too far away, it may not receive a proper signal.

3.5 Sensor Operation Verification

The following steps verify proper operation of the sensors prior to install the sensor array.

1. **Verify proper operation of the rain gauge.** Tip the Integrated outdoor sensor back and forth several times. You will heard a “ticking” sound within the rain gauge. Verify the rain reading on the display console is not reading 0.00. Each “ticking” represents 0.1 inch of rainfall.
2. **Verify proper operating of the wind speed.** Rotate the wind cups manually or with a constant speed fan. Verify the wind speed is not reading 0.0.
3. **Verify proper operation of in/outdoor temperature.**Verify the indoor and outdoor temperature match closely with the console and sensor array in the same location (about 5 to 10’ (1.5 to 3 meters)apart).The sensors should be within 4°F /2℃(the accuracy is ± 2°F/1℃). Allow about 30 minutes for both sensors to stabilize.
4. **Verify proper operation of in/outdoor humidity.**Verify the indoor and outdoor humidity match closely with the console and sensor array in the same location (about 5 to 10’ (1.5 to 3 meters)apart).The sensors should be within 10% (the accuracy is ± 5%). Allow about 30 minutes for both sensors to stabilize.

4. Sensor Pre-installation

4.1 Test the Sensor Before Installation

Recommend to operate and test the weather station for one week before installing it in the permanent location. In this period, you can check out all of the functions, ensure proper

operation, and familiarize with the professional weather station and calibration procedures. This will also allow you to test the wireless range of the weather station.

4.2 Site Survey Before Installation

Do a site survey before installing the weather station. Take the following points into Consider:

1. You must clean the rain gauge once per year and change the batteries every two years. Provideeasy access to the weather station.
2. Avoid radiant heat transfer from buildings and structures. In general, install the sensor array at least 5ft(1.5m) from any building, structure, ground, or roof top.
3. Avoid wind and rain obstructions. The rule of thumb is to install the sensor array at least four times the distance of the height of the tallest obstruction. For example, if the building is 20ft (6m) tall, install 4 x (20 – 6)’ = 56ft (17m) away. Use common sense. If the weather station is installed next to a tall building, the wind and rain will not be accurate.
4. WirelessRange. The radio communication between display console and transmitter in an open field can reach a distance of up to330ft (100m), assume there are no interfering obstacles such as buildings, trees, vehicles, high voltage lines. Wireless radio signals will not penetrate metal buildings. Most wireless applications will only reach up to100ft (30m) due to building obstructions, walls and interference.
5. Radio interference such as PCs, radios or TV sets can, in the worst case, entirely cut off radio communication. Please take this into consideration when choosing display console or mounting locations.

4.3 Best Practices for Wireless Communication

Wireless communication is susceptible to other interference, such as distance, walls and metal barriers. We recommend the following best and useful practices for trouble-free wireless communication.

1. **Electro-Magnetic Interference (EMI)**. Keep the console several feet away from computer monitors and TVs.

2. **Radio Frequency Interference (RFI).** If you have other 433 MHz devices and communication is intermittent, try turning off these other devices for troubleshooting purposes. You may need to relocate the wireless transmitters or receivers to avoid intermittent communication.

3. **Line of Sight Rating.** This device is rated at 300ft line of sight (no interference, barriers or walls) but typically you will get 100ft maximum under most real-world installations, which include passing through barriers or walls.

4. **Metal Barriers.** Radio frequency will not pass through metal barriers such as aluminum siding. If you have metal siding, align the remote and console through a window to get a clear line of sight.

The following is a table of reception loss vs. the transmission medium. Each “wall”or obstruction decreases the transmission range by the factor shown below.

Medium	**RF Signal Strength Reduction**
Glass (untreated)	5-15%
Plastics	10-15%
Wood	10-40%
Brick	10-40%

Concrete	40-80%
Metal	90-100%

5.Final Installation of Sensor

5.1 Integrated Outdoor SensorInstallation

ThisProfessional Weather Station can be used in both the Northern and Southern Hemispheres. Prior to installation, you will need to calibrate the wind direction.

Note: There are four alphabet letter of N, E, S and W around the wind direction.(N is North, E is East, S is South, W is West)

NorthernHemispheres

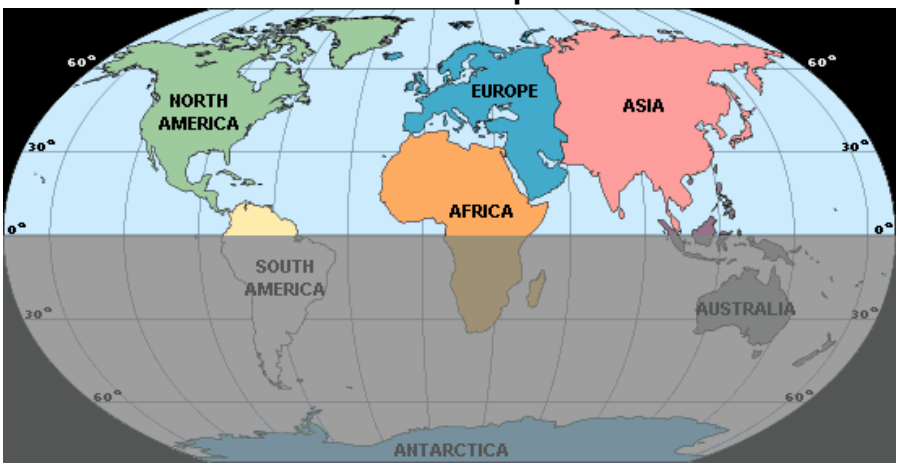

Southern Hemispheres

5.1.1 Northern Hemispheres (NOR) References.

The cardinal directions (N, S, E, W) molded on the body of the outdoor sensor are indicators for the Northern Hemisphereonly.
Step 1: There is a “S” indicator on the wind vane that indicates South, as shown in Figure 14. Check the wind directions with compass and Align this “S” marker in the direction of South.

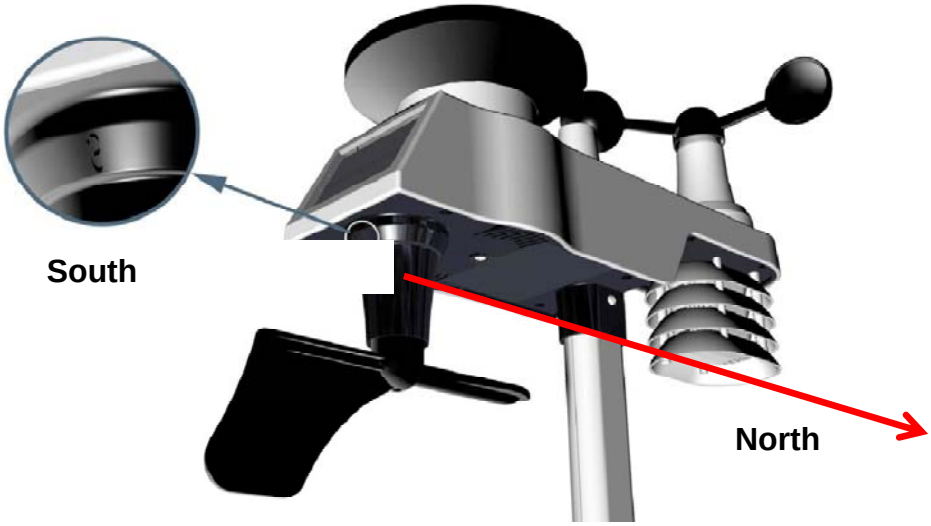

Figure 9

Step 2: Console operationset to NorthernHemispheres(**NOR** in the time area) in Location division. (Check the detailed step of setting the time area in the part 15 of Chapter 7.2)

5.1.2 Southern Hemispheres (SOU) References.
For Southern Hemisphere installations, ignore the direction (N, S, E, W), and face **the solar panel to the North** (and in a sunny position) when it comes to install the Integrated outdoor sensor, as show in figure 10.

Step 1: Install the Integrated outdoor transmitter and face the solar panel to the North.

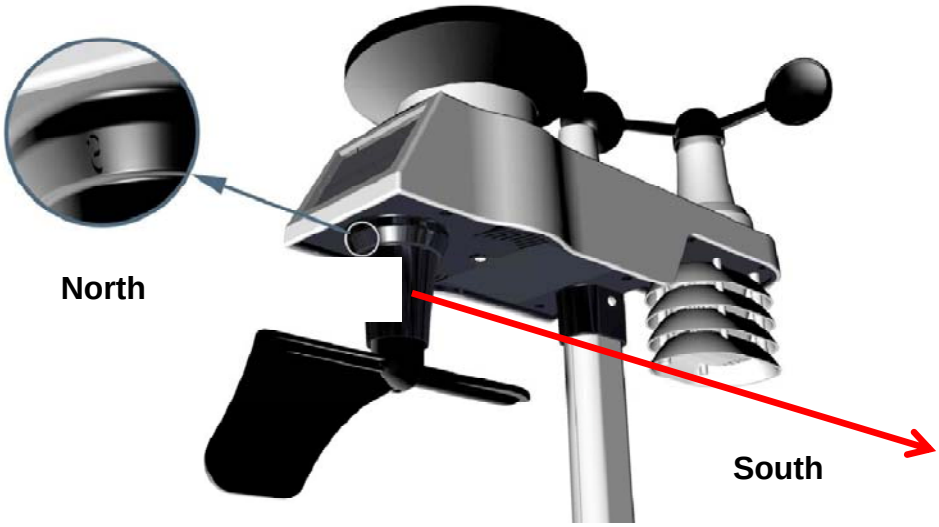

Figure 10

Step2: Console operation set to Southern Hemispheres(**SOU** in the time area) in Location division. (Check the detailed step of setting the time area in the part 15 of Chapter 7.2)

Note: The location division (NOR or SOU) on the Display Console and the directions of the sensor have to be adjusted to match with your real location.
If the wind direction sensor is not positioned correctly during installation, permanent wind direction error will be introduced.

5.1.3 Mounting & Fixing the Sensor Horizontally

Fasten the integrated outdoor sensor to the mounting pole brackets with foot-mounting，twoØ3 bolts and M3 nuts.

Then, tighten the mounting pole to your existing mounting pole with the four bolts (Ø5) andnuts (M5) , or fix it on the flat surface with four tapping screws, as show in Figure 11.

Figure 11

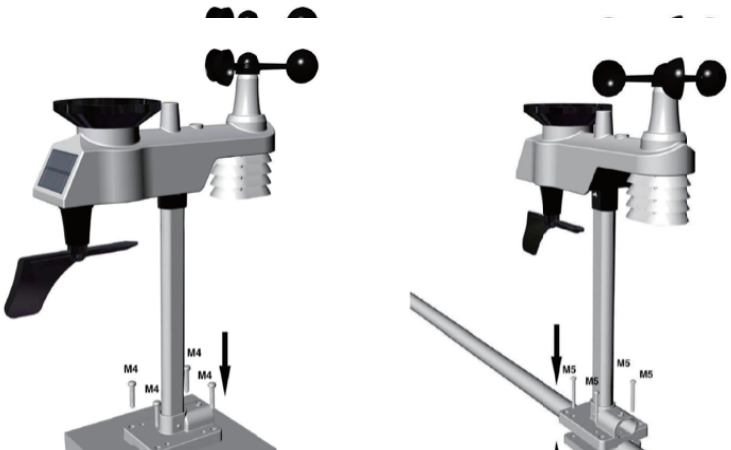

5.1.4 Mounting & Fixing the Sensor Vertically

Fasten the integrated outdoor sensor to the mounting pole brackets withfoot-mounting,two Ø3 bolts and M3 nuts.

Then, tighten the mounting pole to your existing mounting pole with the four bolts (Ø5) andnuts (M5) , or fix it on the flat surface with four tapping screws, as show in Figure 12.

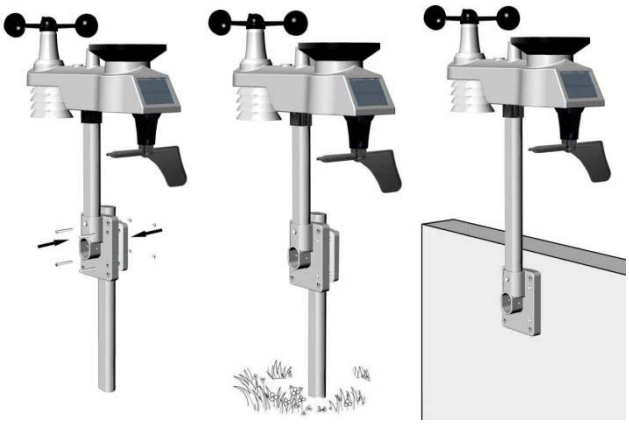

Figure 12

6.Low Battery Icon

A low battery indicator icon is shown in the display window for integrated outdoor sensor.

When the low battery icon appears (The Integrated outdoor sensor battery voltage is lower than 3.6V), replace the batteries in the sensor with fresh batteries.

Be sure to never mix old and new batteries, and never mix battery types such as alkaline and lithium together.

7. Display Console Operation

7.1 Quick Display Mode

Note: The display console has five keys for easy operation: ***CHANNEL/+***key, ***SET*** key, ***SNOOZE/LIGHT*** key, ***ALARM*** keyand ***MAX/MIN/-*** key.

Note: To exit the Quick Display Mode at any time, press the ***SNOOZE/LIGHT***key of the display console.

While in Normal Mode, press (do not hold) the ***SET*** key to enter the Quick Display Mode as follows:

- once for time, time/week and second
- Twice for rainfall
- three for pressure
- four for sensor temperature

1. Time, Time/Week and Second. Press the *CHANNEL/*+or*MAX/MIN/-* key to toggle between time, time/week and second.

2. Rainfall. Press the *CHANNEL/*+ or *MAX/MIN/*-key to toggle between 1h,24h week, month and total.

To clear the total rain, press the *CHANNEL/*+ or *MAX/MIN/*-button until total rain is displayed. The total rain will flash. Press and hold the ***SET***button for five seconds until total rain reads 0.0.

3. Absolute Pressure and Relative Pressure. Press the *CHANNEL/*+ or*MAX/MIN/-* key to toggle between absolute pressure and relative pressure.

4. Outdoor Temperature. Press the CHANNEL/+ or MIN/MAX/- key to toggle between dew point and feels like.

7.2 Set (Program) Mode

While in Normal Mode, **press and hold** the ***SET*** key for at least three seconds to enter the Set Mode. The first setting will begin flashing. You can press the ***SET*** key again to skip any step, as defined below.

Note: In the Set mode, press the ***CHANNEL/+*** key or ***MAX/MIN/-***key to change or scroll the setting value. Hold the ***CHANNEL/+*** key or ***MAX/MIN/-*** key for three seconds to increase/decrease rapidly.

- **Note:** To exit the Set mode at any time, press the ***SNOOZE/LIGHT*** button of the display console.
- **Note:** Time Server Sync Status(only for Wifi version)

1. **12/24 Hour Format (default: 24h).** Press the ***SET***key again to adjust the 12/24 hour format setting (FMT). Press the *CHANNEL/+* key or *MAX/MIN/-* key to change between 12 hour and 24 hour format.
2. **Change Hour.** press the ***SET*** key again to set the hour. Press the*CHANNEL/+* key or*MAX/MIN/-* key to adjust the hour up or down.
3. **Change Minute.**Press the ***SET*** key again to set the minute. Press the *CHANNEL/+* key or *MAX/MIN/-* key to adjust the minute up or down.
4. **Date Format (default: D-M). Press** the ***SET*** key again to enter the Day/Month format mode.Press the *CHANNEL/+* or *MAX/MIN/-* key to switch between M-D, D-M.
5. **Change Month.** Press the ***SET*** key again to set the calendar month. Press the *CHANNEL/+* key or*MAX/MIN/-*key to adjust the calendar month.

6. **Change Day.** Press the ***SET*** key again to set the calendar day. Press the *CHANNEL/+* key or *MAX/MIN/-* key to adjust the calendar day.

7. **Change Year.** Press the ***SET*** key again to set the calendar year. Press the *CHANNEL/+* key or*MAX/MIN/-* key to adjust the calendar year.

8. **Max/Min Clearing (default: ON)**. Press the ***SET***key again to set the Max/Min clearing mode (CLR). The Max/Min can be programmed to clear daily (at midnight) or manually. Press the *CHANNEL/+* key or *MAX/MIN/-* key to switch between ON (Clears 24h) and OFF (Manually).

9. **Temperature Units of Measure (default:** °C**).** Press the ***SET*** key again to change the temperature units of measure. Press the *CHANNEL/+* key or *MAX/MIN/-* key to switch between °F and °C units of measure.

10. **Wind Speed Units of Measure (default:** m/s**)**. Press the ***SET*** key again to change the wind speed units of measure . Press the *CHANNEL/+* key or *MAX/MIN/-* key to toggle the wind speed units between m/s, bft,knots,mph or km/h.

11. Rainfall Units of Measure (default: mm**)**. Press the ***SET***key again to change the Rainfall units of measure. Press*CHANNEL/+* key or *MAX/MIN/-* key to toggle the rainfall units between mm and inch.

12. **Barometric Pressure Display Units(default:** hPa**)**. Press the ***SET***key again to change the pressure units of measure. Press the*CHANNEL/+* key or *MAX/MIN/-* key to toggle the pressure units between mmHg, inHg or hPa.

13. **Pressure Threshold Setting (default level 2).** Press the ***SET*** key again to change the pressure threshold. Press the *CHANNEL/+* key or *MAX/MIN/-* key to change pressure

threshold 2 hPa to 4 hPa.(For detailed information of this part please refer to 10.5)

14. **Weather Icons Setting (default: partly cloudy).** Press the ***SET*** key again to change the initial weather icon. Press the *CHANNEL/+* key or *MAX/MIN/-* key to select the initial weather icon of Sunny, Cloudy, Partly Cloudy or Rainy. (For detailed information of this part please refer to 10.2)

15. **Location Division. (default: Northern Hemisphere).** Press the ***SET***key again to change the location division. Press the *CHANNEL/+* key or*MAX/MIN/-* key to toggle the position of the earth Northern Hemisphere (NOR) or Southern Hemisphere (SOU). (**Refer to 5.0 Final Installation of Sensors**)

7.3 Sensor Search Mode

If Integrated Outdoor Transmitter data is lost, pressand hold the ***CHANNEL/+*** button for 3 seconds, the search icon will be displayedconstantly for 3 minutes. Once the signal is reacquired, the remote search icon will turn off,and the current values will be displayed.

7.4 Max/Min Viewing and Reset Mode

7.4.1 Max Record Viewing and Reset

In normal mode, press (do not hold) the ***MAX/MIN/-***key**,** the **MAX** icon will be displayed in date area.

Press the ***SET***key to view max values of rainfall (1h, 24h, week or month), wind gust and average, pressure (ABS or

REL),outdoor temperature and humidity(dew point or feels like)and indoor temperature and humidity.

Press the ***MAX/MIN/-*** key for three seconds to clear all Max values.(Rainfall, wind gust and average, pressure, temperature and humidity maximum values).

Press the ***SNOOZE/LIGHT*** key to exit the min/max checking and clearing mode, return to normal display mode.

Note: The Maximum values will display the current values after reset.

7.4.2 Min Record Viewing and Reset

Press the ***MAX/MIN/-*** key again (do not hold), the **MIN** icon will be displayed. Press the ***SET***key to view min values of pressure (ABS or REL), outdoor temperature and humidity(dew point or feels like),and indoor temperature and humidity.

Press the ***MAX/MIN/-*** key for three seconds to clear all Min values.(pressure, temperature and humidity minimum values).

Press the ***SNOOZE/LIGHT*** key to exit the min/max checking and clearing mode, return to normal display mode.

Note: The Minimum values will display the current values after reset.

7.5 Snooze Mode

If the alarm sounds, and you wish to silence the alarm, press the ***SNOOZE/LIGHT*** key, the backlight will turn on. The alarm icon will continue to flash and the alarm will silence for five minute.

Press any key (***MAX/MIN/-,SET,ALARM,CHANNEL/+***) to permanently exit the ***Snooze*** mode.

7.6 Backlight Mode

7.6.1 Adjustable Brightness of Backlight

1. There are 3 levels of brightness of display backlight. When thebacklight is on, press ***SNOOZE/LIGHT*** key to switch between the 3 levels.

2. When backlight is off, press and hold the ***SNOOZE/LIGHT*** key for three seconds, the backlight will turn on permanently, and **BL ON** icon will be displayed for three seconds in the date area.

3. To turn off the display backlight at any time, press and hold the ***SNOOZE/LIGHT*** key for two seconds. **BL OFF** icon will be displayed for three seconds in the date area.

Note: If the display console plugged into AC adapter power, the time area will display AC ON and the backlight will remain on. It is not recommended leaving the display backlight on for a long period of time when operating on batteries only, or the batteries will run out quickly.

Note: The backlight operation is different when operating on batteries to save power.

3. If the display console only powered by battery, and backlight is off,Press the ***SNOOZE/LIGHT*** button once.Thebacklight will turn on for five seconds, and if no operation is performed for three seconds, the backlight will turn off.

8. Alarm Mode

The weather station includes the following alarms:

- Time (Alarm 1 and Alarm 2)
- Wind Gust
- Wind Average
- Outdoor Temperature
- Outdoor Humidity
- Outdoor Feels Like Temperature
- Outdoor Dew Point
- Hourly Rainfall
- 24 Hour Rainfall
- Absolute Pressure
- Relative Pressure
- Indoor Temperature
- Indoor Humidity

8.1 Alarm T

8.1 Alarm Triggered

When an alarm condition is exceed, the alarm icon will flash

(visual) and the alarm beeper will sound (audible). To silence the beeper, press any key.

8.2 ViewHigh/Low Alarm Value

To view the current alarm settings, press the ***ALARM***key to enter the alarm mode. HI AL 1 will be displayed in the date area. At the same time Alarm 1 time and HI alarm parameters of indoor temperature and humidity, outdoor temperature and humidity,outdoorfeels like , 1h rainfall, absolute pressure, wind gust, wind averageare displayed.

Press ***SET*** key to view Alarm 2 time and HI alarm parameters of indoor temperature and humidity, outdoor temperature and humidity ,outdoor dew point, 24h rainfall, relative pressure, wind gust, wind averageare displayed.

Press ***ALARM***key again to view the LOW alarms along with the alarm clock time in the same way as HI alarms.

Press ***ALARM*** key again to return to normal mode.

Note: Press the ***SNOOZE/LIGHT*** key at any time to return to the normal mode in HI/Low alarm mode.

8.3 Setting the Alarms

Press ***ALARM***key to enter the alarm mode.
Press and hold the ***SET***key for three seconds. The first alarm parameter will begin flashing (alarm hour).

To save the alarm setting and proceed to the next alarm parameter, Press (do not hold) the ***SET*** key.

To adjust the alarm parameter, press the ***CHANNEL/+*** key or ***MAX/MIN/-*** key to increase or decrease the alarm settings, or press and hold the ***CHANNEL/+*** key or ***MAX/MIN/-*** key for three seconds to increase or decrease the alarm settings rapidly.

Press the ***ALARM*** key to turn on (the alarm icon will appear) and off the alarm.

Press the ***SNOOZE/LIGHT*** key once at any time to return to the normal mode. After 30 seconds of inactivity, the alarm mode will time out and return to normal mode.
The following is a list of the individual alarm parameters that are set (in order):

1.Alarm hour(alarm 1)
2.Alarm minute(alarm 1)
3.Alarm hour(alarm 2)
4.Alarm minute(alarm 2)
5.Wind Gust HI alarm
6.Windaverage HI alarm
7.Outdoor temp HI alarm
8.Outdoor temp low alarm
9.Outdoor humidity HI alarm
10.Outdoor humidity low alarm
11.Outdoor feels like HI alarm
12.Outdoor feels like low alarm
13.Outdoor dew point HI alarm
14.Outdoor dew point low alarm
15.Rainfall (1h) HI alarm
16.Rainfall (24h) HI alarm
17.Absolute pressure HI alarm
18.Absolute pressure low alarm
19.Relative pressure HI alarm
20.Relative pressure low alarm
21.Indoor temperature HI alarm
22.Indoor temperature low alarm
23.Indoor humidity HI alarm
24.Indoor humidity low alarm

Note: To prevent repetitive temperature alarming, there is a 0.9 °F(0.5°C) tolerance band. For example, if you set the high alarm to 80.0°F(26.7°C) and silence the alarm, the alarm icon will continue to flash until the temperature falls below 80.0°F (26.7°C), at which point, the alarm will reset and must increase above 80.0°F(26.7°C) to activate again.

Note: To prevent repetitive alarming of humidity, there is a 4% tolerance band in humidity alarm. For example, if you set the high alarm to 60% and silence the alarm, the alarm icon will

continue to flash until the humidity falls below 56%, at which point, the alarm will reset and must increase above 60% to activate again.

8.4 Alarm and Key Beeper ON/OFF

Press any button to silence the alarm sound.

In normal mode, press and hold the ***ALARM***key for three seconds to toggle the **BZON** (beeper on) or **BZOFF** (beeper off)depending on the current setting.

Display console return to normal mode without any operation in three seconds.

9. Optional Calibration Mode

Note: The calibrated value can only be adjusted on the display console.The outdoor remote sensor(s) always displays the un-calibrated or measured value.

Note: The measured humidity range is between 10% and 99%. Humidity cannot be accurately measured outside of this range. Thus, the humidity cannot be calibrated below 10% or above 99%.

The purpose of calibration is to fine tune or correct for any sensor error associated with the devices margin of error. The

measurement can be adjusted from the console to calibrate to a known source.

Calibration is only useful if you have a known calibrated source you can compare it against, and is optional. This section discusses practices, procedures and sources for sensor calibration to reduce manufacturing and degradation errors. Do not compare your readings obtained from sources such as the internet, radio, television or newspapers. They are in a different location and typically update once per hour.

The purpose of your weather station is to measure conditions of your surroundings, which vary significantly from location to location.
The profession weather station supports up to eight remote thermo-hygrometer sensors. Each of the eight sensors can be calibrated.

9.1 Calibration of Temperature Mode

In normal mode, press and hold the ***SET*** and ***CHANNEL/+*** keys at the same time for five seconds to enter the tempcalibration mode. The indoor temperature will begin flashing.

Press the ***CHANNEL/+*** key or ***MAX/MIN/-*** key to increase or decrease the temperature reading (in increments of 0.1). Press and hold the ***CHANNEL/+*** key or ***MAX/MIN/-*** key for three seconds to increase or decrease rapidly.

Press the ***ALARM*** key to reset current value.

Press the ***SET*** key switch to outdoor Temperature.

To exit the temperature calibration mode at any time, press the ***SNOOZE/LIGHT***button on the top of the display console. If no operation is performed, the calibration mode will timeout in 30 seconds.

9.2 Calibration of Humidity Mode

In normal mode, press and hold the ***SET***and ***MAX/MIN/-*** keys at the same time for five seconds to enter into the humidity calibration mode. The indoor humidity will begin flashing.

Press the ***CHANNEL/+*** key or ***MAX/MIN/-*** key to increase or decrease the humidity reading (in increments of 1%). Press and hold the ***CHANNEL/+*** key or ***MAX/MIN/-*** key for three seconds to increase or decrease rapidly.

Press the ***ALARM*** key to reset current value.

Press the ***SET*** key switch to outdoor humidity.

To exit the humidity calibration mode at any time, press the **SNOOZE/LIGHT** button on the top of the display console. If no operation is performed, the calibration mode will timeout in 30 seconds.

Note: The Humidity is a difficult parameter to measure accurately and drifts over time. The calibration feature allows you to zero out this error. To calibrate humidity, you will need

an accurate source, such as a sling psychrometer or Humidipaks One Step Calibration kit.

9.3 Calibration of Sensors Mode

In normal mode, press and hold the ***SET*** and ***ALARM*** keys at the same time for five seconds to enter the pressure, wind gust, rainfall calibration mode. The letter “CAL” will appear at the bottom of the screen.

Press the ***SET*** key to skip over a parameter to the next.

◆ Absolute Pressure Calibration

In the calibration mode, the “ABS” symbol will display at the pressure section, the absolute pressure value will flash.(The default value is 0.00 inHg)
Press the ***CHANNEL/+*** keyor ***MAX/MIN/-*** key to increase or decrease the absolute pressure value (in increments of 0.01 inHg).

Press and hold the ***CHANNEL/+*** or ***MAX/MIN/-*** key for three seconds to increase or decrease rapidly.

Press the ***ALARM*** key to reset current value.

Example: The calibrated pressure sources measure 28.37 inHg. The display console pressure reads 28.75 inHg.
Offset = 28.37 - 28.75 = - 0.38 inHg

◆ Relative Pressure Calibration

In the calibration mode, press the ***SET*** key once, the “REL” symbol will display at the pressure section, the relative pressure value will flash. (The default value is 0.00 inHg)

Press the ***CHANNEL/+*** keyor ***MAX/MIN/-*** key to increase or decrease the relative pressure value (in increments of 0.01 inHg).

Press and hold the ***CHANNEL/+*** or ***MAX/MIN/-*** key for three seconds to increase or decrease rapidly.

Press the ***ALARM*** key to reset current value.

Example:The calibrated pressure sources measure 25.00 inHg. The display console pressure reads 24.85 inHg.
Offset = 25.00 - 24.85 = 0.15 inHg

Note: The display console displays two different pressures: absolute (measured) and relative (corrected to sea-level).

To compare pressure conditions from one location to another, meteorologists correct the pressure to sea-level conditions. Because the air pressure decreases as you rise in altitude, the sea-level corrected pressure (the pressure your location would be at if located at sea-level) is generally higher than your measured pressure.

Thus, your absolute pressure may read 28.62 inHg (969 mb) at an altitude of 1000 feet (305 m), but the relative pressure is 30.00 inHg (1016 mb).

The standard sea-level pressure is 29.92 in Hg (1013.2hpa). This is the average sea-level pressure around the world. Relative pressure measurements greater than 29.92 inHg (1013.2hpa) are considered high pressure and relative pressure measurements less than 29.92 inHg are considered low pressure.

To determine the relative pressure for your location, locate an official reporting station near from you (the internet is the best source for real-time barometer conditions, such as the website of Weather.com or Wunderground.com), and set your weather station to match the official reporting station.

◆ Wind Speed Calibration

In the calibration mode, press the ***SET*** button twice and the wind speed value will flash (the default is 1.00).
Press the***CHANNEL/+***key or ***MAX/MIN/-***key to adjust the wind speed calibration factor from 0.75 to 1.25, where:

Calibrated Wind Speed = Calibration factor x Measured Wind Speed

Press and hold the ***CHANNEL/+*** or ***MAX/MIN/-*** key for three seconds to increase or decrease rapidly.

Press the ***ALARM*** key to reset current value.

Note: The wind gust is also affected by the wind speed calibration factor.

Discussion: Wind speed and wind gust are adversely affected by installation constraints. The rule of thumb is to install the weather station four times the distance of the height of the tallest obstruction (for example, a 6m(20ft) house would require an installation 24m(80ft) away).

In many instances, due to trees and other obstructions, this is not possible. The wind speed calibration allows you to correct for these obstructions.

In addition to installation challenges, wind speed bearings (any moving part) wears over time. To correct for wear, the correction value can be increased until the wind cups must be replaced.

Without a calibrated source, wind speed is a difficult parameter to measure. We recommend using a calibrated wind meter and constant, high speed fan.

◆ Rain Calibration

In the calibration mode, press the ***SET*** button three times and the rain value will flash (the default is 1.00).
Press the***CHANNEL/+***key or ***MAX/MIN/-***key to adjust the rain calibration factor from 0.75 to 1.25, where:

Calibrated Rain = Calibration factor x Measured Rain

Press and hold the ***CHANNEL/+*** or ***MAX/MIN/-*** key for three seconds to increase or decrease rapidly.

Press the ***ALARM*** key to reset current value.

Discussion: The rain collector is calibrated at the factory based on the funnel diameter. The bucket tips every 0.01” of rain (referred to as resolution). The accumulated rainfall can be compared to a sight glass rain gauge with an aperture of at least 4”.

Note: that debris and insects can collect inside the tipping mechanism (they make a good spiders nest). Carefully remove the funnel and inspect the tipping mechanism for debris prior to calibration.

10.Other Features of Display Console

10.1 Weather Forecasting

Note: The weather forecast or pressure tendency is based on the rate of change of barometric pressure. In general, when the pressure increases, the weather improves (sunny to partly cloudy) and when the pressure decreases, the weather degrades (cloudy to rain).

The weather forecast is an estimation or generalization of weather changes in the next 24 to 48 hours, and varies from location to location. The tendency is simply a tool for projecting weather changing conditions and is never to be relied upon as an accurate method to predict the weather.

10.2 Weather Icons

Condition	Icon	Description
Sunny		Pressure is rising and the previous condition is partly cloudy.
Partly Cloudy		Pressure is falling and the previous condition is sunny orPressure is rising and the previous condition iscloudy
Cloudy		Pressure is falling and the previous condition is partly cloudy orPressure is rising and the previous condition is rainy.
Rainy		Pressure is falling and the previous condition is cloudy

10.3 Moon Phase

The following moon phases are displayed based on the calendar date.

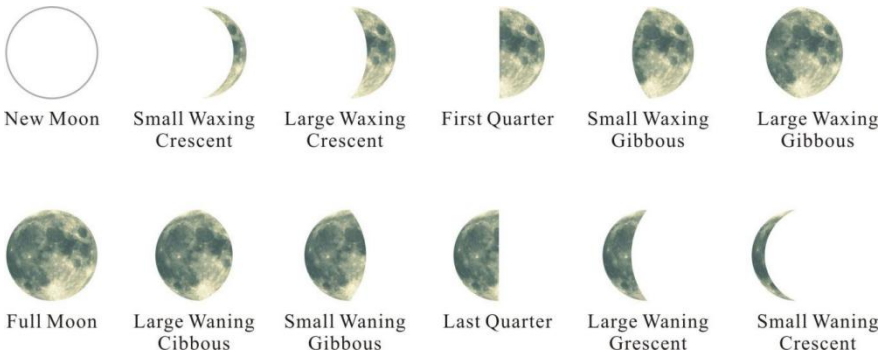

10.4 Feels LikeTemperature

10.4.1 Feels Like Temperature

Feels like temperature is a combination of Heat Index and Wind Chill.

1. Temperatures less than 4.4℃(40°F), the wind chill is displayed, as shown in the National Weather Service Wind Chill Table below:

NWS Windchill Chart

Wind (mph) \ Temperature (°F)	40	35	30	25	20	15	10	5	0	-5	-10	-15	-20	-25	-30	-35	-40	-45
Calm	40	35	30	25	20	15	10	5	0	-5	-10	-15	-20	-25	-30	-35	-40	-45
5	36	31	25	19	13	7	1	-5	-11	-16	-22	-28	-34	-40	-46	-52	-57	-63
10	34	27	21	15	9	3	-4	-10	-16	-22	-28	-35	-41	-47	-53	-59	-66	-72
15	32	25	19	13	6	0	-7	-13	-19	-26	-32	-39	-45	-51	-58	-64	-71	-77
20	30	24	17	11	4	-2	-9	-15	-22	-29	-35	-42	-48	-55	-61	-68	-74	-81
25	29	23	16	9	3	-4	-11	-17	-24	-31	-37	-44	-51	-58	-64	-71	-78	-84
30	28	22	15	8	1	-5	-12	-19	-26	-33	-39	-46	-53	-60	-67	-73	-80	-87
35	28	21	14	7	0	-7	-14	-21	-27	-34	-41	-48	-55	-62	-69	-76	-82	-89
40	27	20	13	6	-1	-8	-15	-22	-29	-36	-43	-50	-57	-64	-71	-78	-84	-91
45	26	19	12	5	-2	-9	-16	-23	-30	-37	-44	-51	-58	-65	-72	-79	-86	-93
50	26	19	12	4	-3	-10	-17	-24	-31	-38	-45	-52	-60	-67	-74	-81	-88	-95
55	25	18	11	4	-3	-11	-18	-25	-32	-39	-46	-54	-61	-68	-75	-82	-89	-97
60	25	17	10	3	-4	-11	-19	-26	-33	-40	-48	-55	-62	-69	-76	-84	-91	-98

Frostbite Times: 30 minutes, 10 minutes, 5 minutes

$$\text{Wind Chill (°F)} = 35.74 + 0.6215T - 35.75(V^{0.16}) + 0.4275T(V^{0.16})$$

Where, T= Air Temperature (°F) V= Wind Speed (mph)

Effective 11/01/01

2. Temperatures greater than 26.7°C(80°F), the heat index is displayed, as shown in the National Weather Service Heat Index Table below:

NWS Heat Index

Relative Humidity (%) \ Temperature (°F)	80	82	84	86	88	90	92	94	96	98	100	102	104	106	108	110
40	80	81	83	85	88	91	94	97	101	105	109	114	119	124	130	136
45	80	82	84	87	89	93	96	100	104	109	114	119	124	130	137	
50	81	83	85	88	91	95	99	103	108	113	118	124	131	137		
55	81	84	86	89	93	97	101	106	112	117	124	130	137			
60	82	84	88	91	95	100	105	110	116	123	129	137				
65	82	85	89	93	98	103	108	114	121	128	136					
70	83	86	90	95	100	105	112	119	126	134						
75	84	88	92	97	103	109	116	124	132							
80	84	89	94	100	106	113	121	129								
85	85	90	96	102	110	117	126	135								
90	86	91	98	105	113	122	131									
95	86	93	100	108	117	127										
100	87	95	103	112	121	132										

Likelihood of Heat Disorders with Prolonged Exposure or Strenuous Activity

Caution | Extreme Caution | Danger | Extreme Danger

10.5 Pressure Threshold Setting

The pressure threshold (the negative or positive rate of change of pressure signifying a change in the weather) can be adjusted from 2 hPa to 4 hPa (default level 2 hPa).

The lower the level pressure threshold setting, the higher sensitivity for weather forecast changes. Locations that experience frequent changes in air pressure require a higher setting compared to locations where the air pressure is typically stagnant.

10.6 Restore Factory Default

To reset the display console to factory default, press the ***MAX/MIN/- key*** while plugging in power adaptor at the same time (Take out batteries before starting the reset operation).

11. Maintenance

Clean the rain gauge of Integrated Outdoor Transmitter once every 3 months.

- Unscrew the rain collector funnel by turning it 30°counter clockwise.
- Gently remove the rain collector funnel.
- Clean and remove any debris or insects.
- Install the collector funnel after it has been cleaned and completely dried.

A.move the rain collector funnel

B.Install the collector funnel.

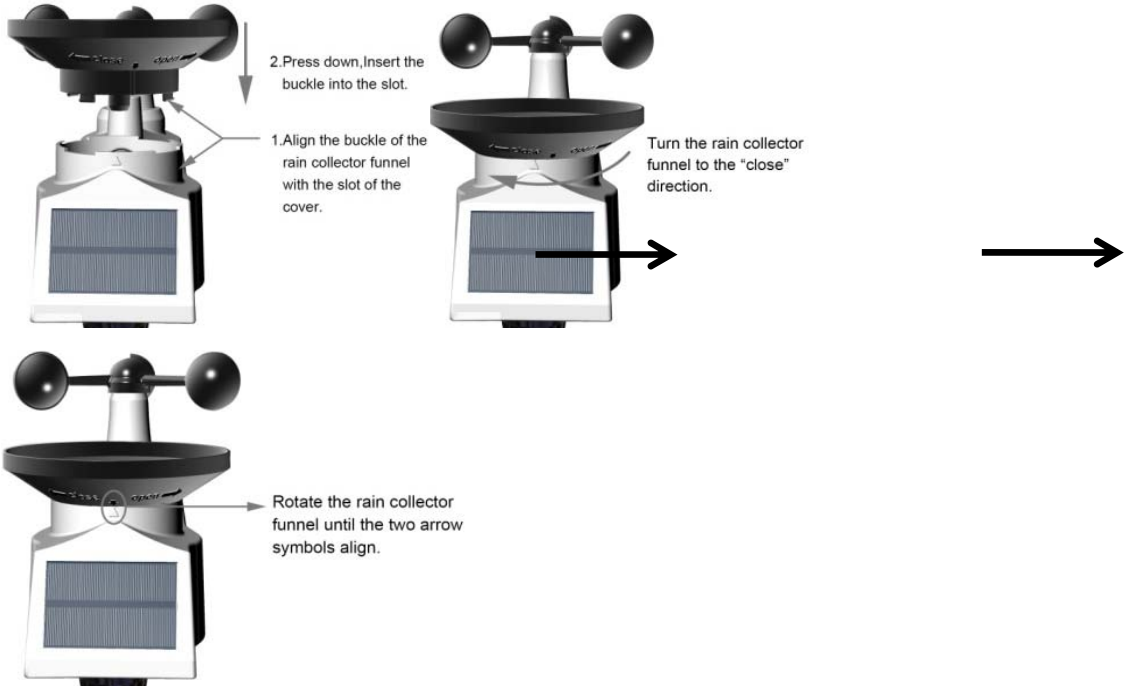

Replace the Integrated outdoor sensor batteries once every 1-2 years.

12. Trouble Shooting Guide

Problem	Solution

Wireless remote not reporting in to console. There are dashes (--.-) on the display console.	If any of the sensor communication is lost, dashes (--.-) will be displayed on the screen. To reacquire the signal, press and hold the CHANNEL/+ button for 3 seconds, the remote search icon will be constantly displayed. Once the signal is reacquired, the remote search icon will turn off, and the current values will be displayed. The maximum line of sight communication range is 100m(330ft) and 30m(100ft) under most conditions. Move the sensor assembly closer to the display console. If the sensor assembly is too close (less than 1.5m/5ft), move the sensor assembly away from the display console. Install a fresh set of batteries in the remote sensor. For cold weather environments, install lithium batteries. Make sure the remote sensors are not transmitting through solid metal (acts as an RF shield), or earth barrier (down a hill). Move the display console around

	electrical noise generating devices, such as computers, TVs and other wireless transmitters or receivers. Move the remote sensor to a higher location. Move the remote sensor to a closer location.
Indoor and Outdoor Temperature do not agree	Allow up to one hour for the sensors to stabilize due to signal filtering. The indoor and outdoor temperature sensors should agree within 2°C/4°F) (the sensor accuracy is ± 1°C/2°F). Use the calibration feature to match the indoor and outdoor temperature to a known source.
Indoor and Outdoor Humidity do not agree	Allow up to one hour for the sensors to stabilize due to signal filtering. The indoor and outdoor humidity sensors should agree within 10 % (the sensor accuracy is ± 5 %). Use the calibration feature to match the indoor and outdoor humidity to a known source.
Display console contrast is weak	Replace console batteries with a fresh set of batteries.

13. Specifications

13.1 Measurement Specifications

The following table provides specifications for the measured parameters.

Measurement	**Range**	**Accuracy**	**Resolution**
Indoor Temperature	0 to 60 °C (32 to 140°F)	± 1 °C (± 2°F)	0.1 °C(°F)
Outdoor Temperature	-40 to 60 °C (-40 to 140°F)	± 1 °C (± 2°F))	0.1 °C(°F)
Indoor Humidity	10 to 99 %	± 5% (only guaranteed between 20 to 90%)	1 %
Outdoor Humidity	10 to 99%	± 5% (only guaranteed between 20 to 90%)	1 %
Rain	0 to 9999mm	<15mm: ±1 mm, 15mm to 9999mm: ±7%	<1000mm (0.3mm) >1000mm (1mm)
Wind Direction	0 - 360º	± 10º (8 point compass)	± 1º (8point compass)

Wind Speed	0 to 50 m/s	2 m/s ~10 m/s:±0.3m/s, 10m/s ~50 m/s: ±10% (whichever is greater)	0.1 m/s
Barometric Pressure:	300 to 1100 hpa	± 3 hpa	0.1 hpa

13.2 Power Consumption

Display Console	3xAAA 1.5V Alkaline or Lithium batteries (not included)
Integrated Outdoor Sensor:	3xAA alkaline batteries or Lithium batteries (not included), the batteries provide backup power when there is limited solar energy. **Note**: Solar panel doesn't charge the battery and it is an auxiliary power supply
Adapter:	5.9V~500mA(included)
Battery life:	Minimum 12 months for base station with excellent reception. Intermittent reception may reduce the battery life. Minimum 12 months for sensors (use lithium batteries in cold weather climates less than -20°C(-4°F).

FCC Statement

This equipment has been tested and found to comply with the limits for a Class B digital device, pursuant to Part 15 of the FCC Rules. These limits are designed to provide reasonable protection against harmful interference in a residential installation. This equipment generates uses and can radiate radio frequency energy and, if not installed and used in accordance with the instructions, may cause harmful interference to radio communications. However, there is no guarantee that interference will not occur in a particular installation. If this equipment does cause harmful interference to radio or television reception, which can be determined by turning the equipment off and on, the user is encouraged to try to correct the interference by one or more of the following measures:

-- Reorient or relocate the receiving antenna.

-- Increase the separation between the equipment and receiver.

-- Connect the equipment into an outlet on a circuit different from that to which the receiver is connected.

-- Consult the dealer or an experienced radio/TV technician for help.

Changes or modifications not expressly approved by the party responsible for compliance could void the user's authority to operate the equipment.

Warning: The user should be 20CM away from the product when it is used.