Pictures are for illustration only.

LiteMic

USER MANUAL

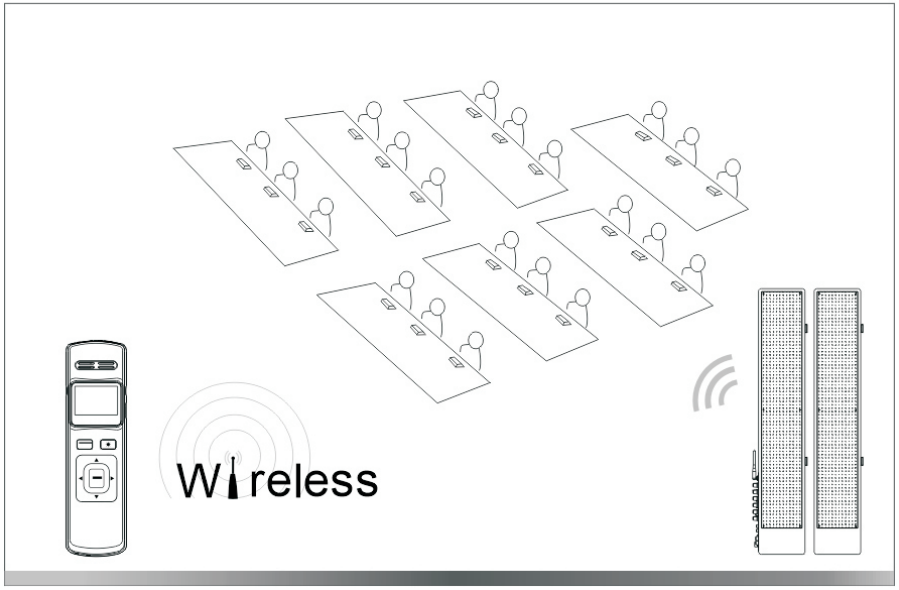

LiteMic Wireless Microphone System

LiteMicA

Lite The Nite Technologies, LLC
Email: joseph.smith@LTNTechnologies.com
Phone: 606-547-8363

www.LTNTechnologies.com

※ Packing List

- Wireless Microphone.....1 pc
- Belt Clip.....1 pc
- Power Adaptor.....1 pc
- USB Dongle.....1 pc
- MicroUSB Cable.....1 pc
- Wireless Microphone System Loudspeaker.....1 set
- Power Cord.....1 pc
- Speaker Cable.....1 pc
- User Manual.....1 pc

※ Safety Precautions and Procedures

Attention! To avoid injury from electric shock adhere to the following safety procedures:

◇ **DO NOT** touch the power plug with wet hands.Power outlet must be 120V AC.

◇ **DO NOT** pull on the power cord to disconnect from the outlet.Stress to the cord can result in pulling the cord from the plug.

◇ **DO NOT** place the speaker around direct sunlight or any heat source such as electric/gas stove or heaters of any kind.Do not place near an open flame.

◇ **DO NOT** place anything on top of the speaker. Allow the speaker to sit in an“open air”environment with plenty of room around it. Unit can overheat when not in an “open air”environment.

◇ **DO NOT** take apart the speaker for any reason.This could cause electric shock.Please direct questions to customer support.

Not Following Safety Procedures Voids the Warranty!

※ Function Parts

1.Wireless Microphone System Loudspeaker

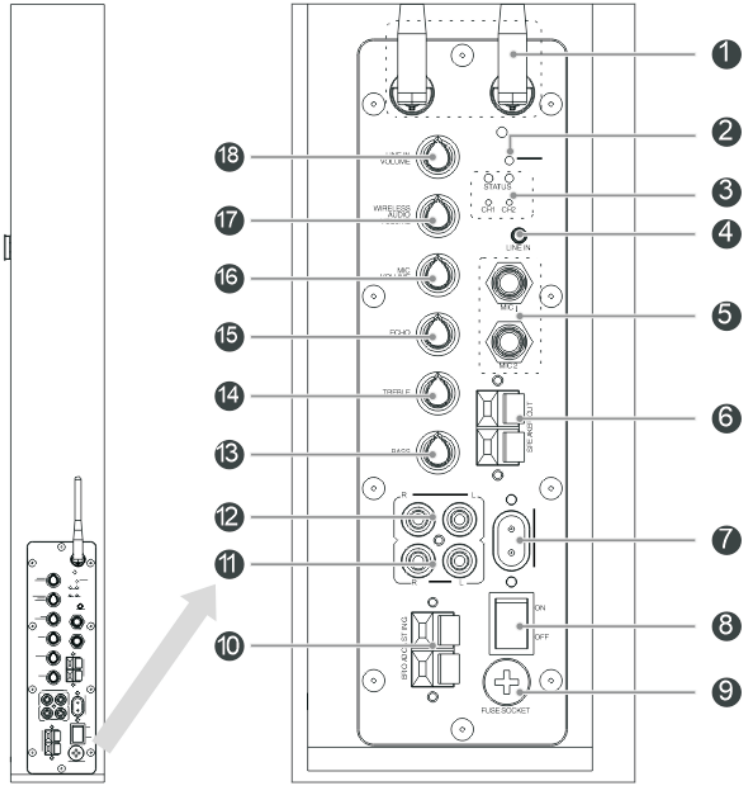

1 Antennas	7 Power(AC120V)	13 Bass knob
2 Power indicator	8 Power switch	14 Treble knob
3 Channel button & Channel indicator	9 Fuse	15 Reverb
4 3.5mm audio input	10 Broadcasting input	16 Wired MIC volume knob
5 1/4'' MIC input	11 RCA In	17 Wireless MIC volume knob
6 Speaker output	12 RCA Out	18 Line-in volume knob

2.Wireless Microphone

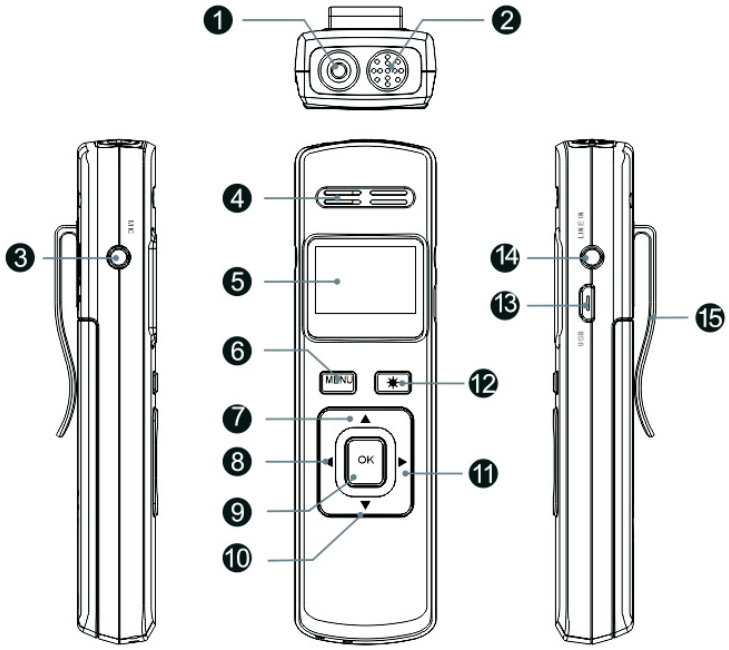

1 Laser Pointer

Press the laser pointer button(12) for 3 seconds to toggle the pointer on and off.

2 MICA

MICA is to pickup sound from a 90 degree angle.

3 3.5mm microphone input

To connect the included headset microphone.

4 MICB

MICB is to pickup sound from a 130-160 degree angle.

5 LCD Screen

Displays channel, volume, power and charging status.

6 Main Menu button

Press it to enter the main menu of the microphone.

Name of button	Function/operation	Not connected with the receiver	Connect with the receiver
Menu button	Balanced set: Choice for Male/female sound	No	Yes
	Match for PPT dongle: Paired switch	Yes	Yes
	User defined key: Defined by user	No	No
	System setting: System setting	No	Yes
	language switch: Choice for Chinese or English	Yes	Yes

7 Channel up

Channel up(Use the supplied USB dongle to add powerpoint slide advancer function)

8 Return button

Press this button to go back one page.

9 Power switch/OK button

Press the button for 3 seconds to turn on/off device,a short press the button to confirm selected function.

10 Channel Down

Channel down(Use the supplied USB dongle to add powerpoint slide advancer function)

11 Forward button

Press the button to enter the options menu.

⓬ Laser pointer on/off button

Hold the button for 3 seconds to turn the pointer on and off.

⓭ USB Interface

Used to charge the wireless microphone.

⓮ 3.5mm earphone jack

Used to plug in the wired headset mic provided.

⓯ Belt Clip

Use this to clip the microphone unit to your belt while wearing the headset microphone if desired.

※ Wireless Operation Instructions

When using the speakers for the first time, you need to perform a system installation.

Step1.Cable Connect

a. Connect passive speaker to the main speaker's" SPEAKER OUT "port with speaker cable, as step ❶ below.

b. Install the AC power cable to main speaker, as step ❷ below.

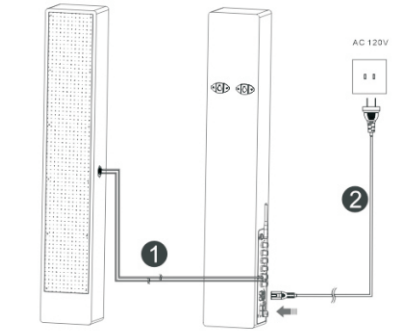

◉ Passive speaker ◉ Main speaker

Step 2: Turn on wireless loudspeaker

Flip the on/off switch to power the unit up.

Step 3: Turn on microphone & pairing automatically

Press"OK" button for 3 seconds to initiate the pairing process between the microphone and the loudspeaker.

◉ USB Dongle

◉ Wireless Microphone ◉ Wireless Loudspeaker

Step 4: The volume of each channel can be adjusted by the knobs.

Step 5 : Turn off the microphone and speaker when not in use.

※ RCA output & Wired microphone input

a. **RCA output function:** you need to connect an audio equipment such as one speaker to the main speaker's " Record output "port with audio cable, as step ❶ below).

b. **Wired MIC input function:** you need to connect the microphone to the main speaker's " MIC "port with audio cable, as step ❷ below).

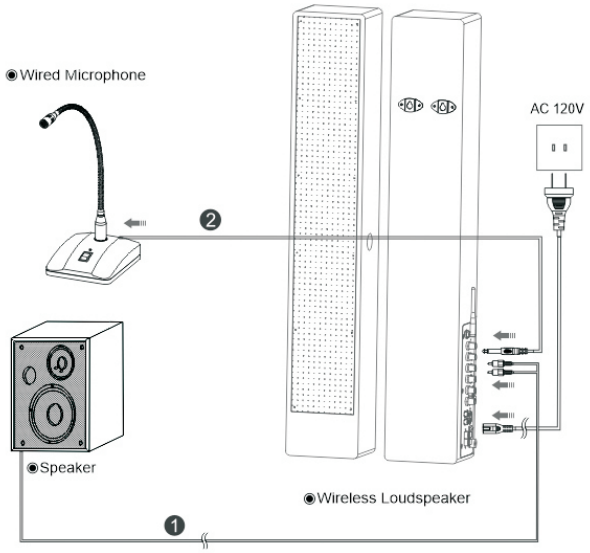

※ Trouble Shooting

1.No sound:

a. Please check the microphone battery level, if the power is low, please charge.

b. Speaker tone/volume switch is off,please turn the tone /volume switch up.

c. Make sure the microphone is within 33 feet of the speaker unit.

2.Low sound:

Check the volume of audio source, microphone and the speaker.

3.Interference:

Change the speaker's channel to avoid interference.The microphone will follow the channel automatically. Consult your dealer before initiating this process.

4.Restore to factory setting:

Press the speaker channel button for about 20 seconds. Release it when the channel indicator light blink. Reboot the microphone and it should restore to factory settings.Consult your dealer before initiating this process.

※ Specifications

1.Wireless Loudspeaker

NO.	Description	Wireless Loudspeaker
1	Work Frequency	2400MHz-2483.5MHz
2	Frequency Response	20Hz-20KHz
3	Work Voltage	AC120V
4	Output Power	2*50W
5	Latency	<0.5ms
6	S/N Ratio	90dB
7	THD	0.3%@1KHz
8	Wireless MIC Input	2
9	Wired MIC Input	2
10	Line in	2
11	Broadcasting input	1
12	Record output	1
13	Bass/Treble/Mono	Yes
14	Work Temperature	-25ºC-85ºC
15	Product Size	W=5.51″x H=31.5″ xL=4.17″

2.Wireless Microphone

NO.	Description	Wireless Microphone
1	Frequency	2400MHz-2483.5MHz
2	Frequency Response	20Hz-20KHz
3	Voltage	AC220V
4	Bandwidth	2M
5	Frequency Shift	±70KHz
6	Frequency Modulation	Automatically
7	Latency	0.5ms
8	Distance	33‘
9	S/N ratio	95dB
10	Sensitivity	⩾-80dB
11	RX Sensitivity	-87dB
12	Sample Ratios	64KHz/16bit
13	Battery usage/life	⩾8 hours
14	Temperature	-25ºC-85ºC
15	Product Size	W=1.22″x H=4.33″ xL=0.87″

The device has been evaluated to meet general RF exposure requirement, the device can be used in portable exposure condition without restriction.

This device complies with part 15 of the FCC rules. Operation is subject to the following two conditions: (1) this device may not cause harmful interference, and (2) this device must accept any interference received, including interference that may cause undesired operation.
NOTE: The manufacturer is not responsible for any radio or TV interference caused by unauthorized modifications or changes to this equipment. Such modifications or changes could void the user's authority to operate the equipment.

NOTE: This equipment has been tested and found to comply with the limits for a Class B digital device, pursuant to part 15 of the FCC Rules. These limits are designed to provide reasonable protection against harmful interference in a residential installation. This equipment generates uses and can radiate radio frequency energy and, if not installed and used in accordance with the instructions, may cause harmful interference to radio communications. However, there is no guarantee that interference will not occur in a particular installation. If this equipment does cause harmful interference to radio or television reception, which can be determined by turning the equipment off and on, the user is encouraged to try to correct the interference by one or more of the following measures:
- Reorient or relocate the receiving antenna.
- Increase the separation between the equipment and receiver.
-Connect the equipment into an outlet on a circuit different from that to which the receiver is connected.
-Consult the dealer or an experienced radio/TV technician for help.