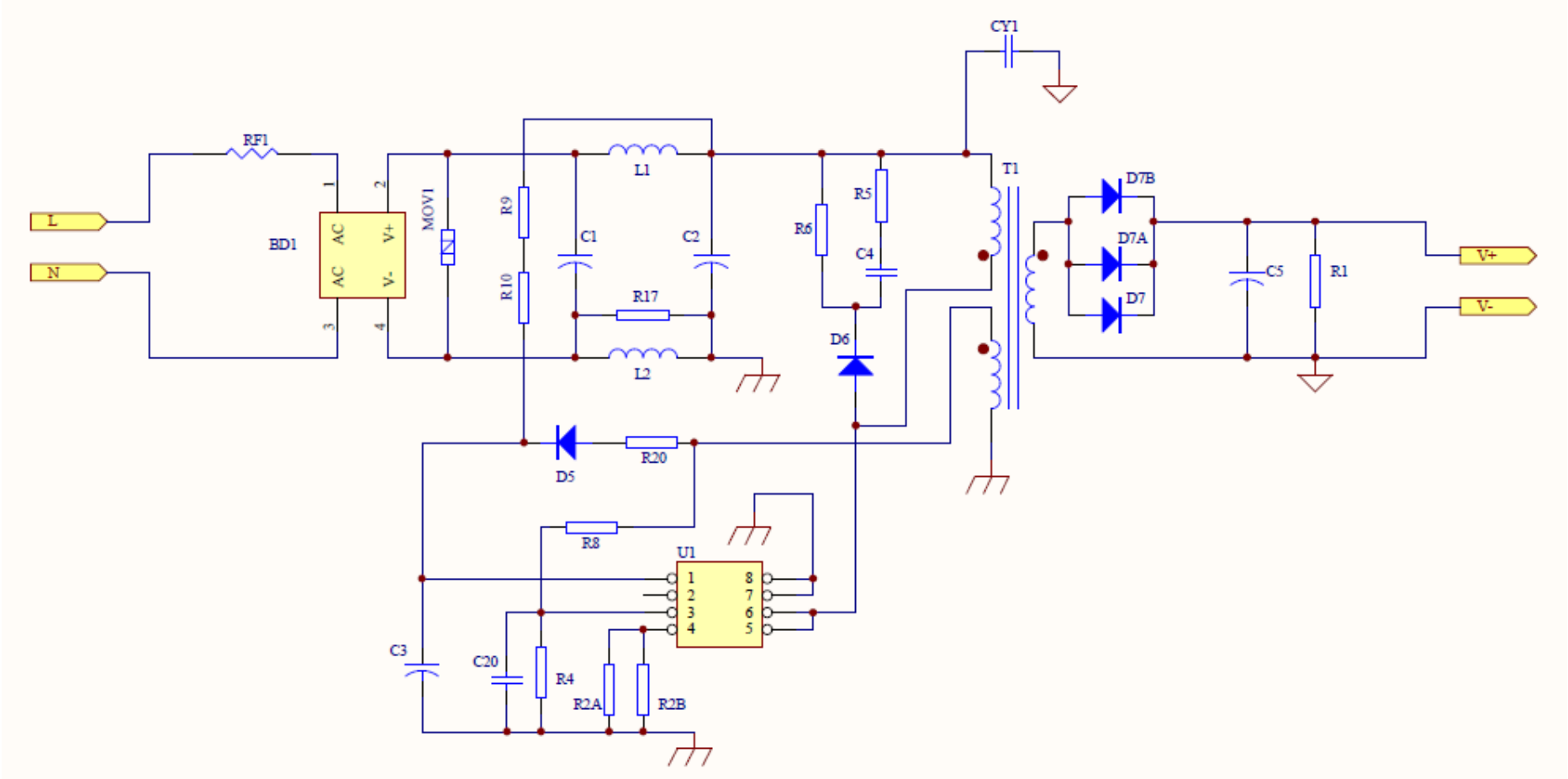
CY1
RF1
L
N
BD1
AC
AC
V+
V-
1
2
3
4
MOV1
R9
R10
L1
C1
C2
R17
L2
R6
R5
C4
D6
T1
D7B
D7A
D7
C5
R1
V+
V-
D5
R20
R8
U1
1
2
3
4
8
7
6
5
C3
C20
R4
R2A
R2B

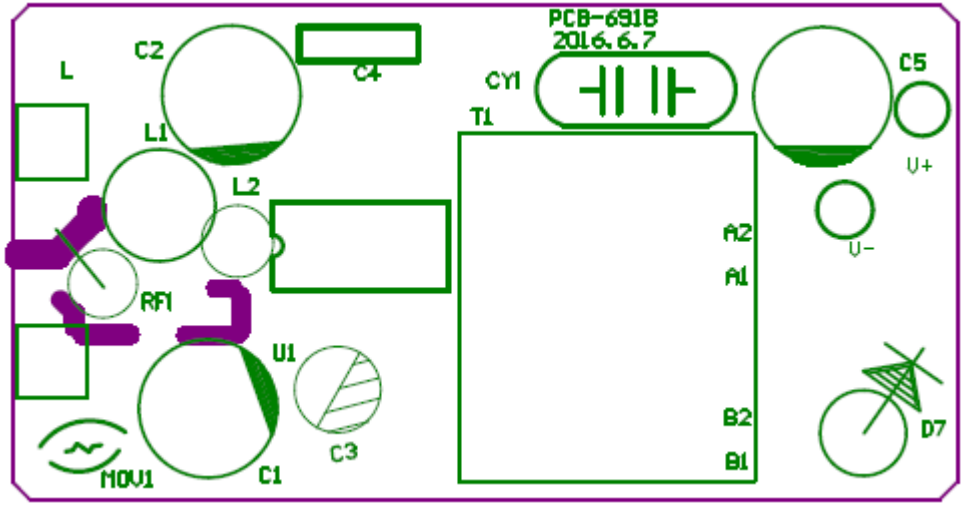
PCB-691B
2016.6.7
L
C2
C4
CY1
T1
C5
L1
L2
U+
A2
A1
U-
RF1
U1
B2
D7
B1
MOV1
C1
C3

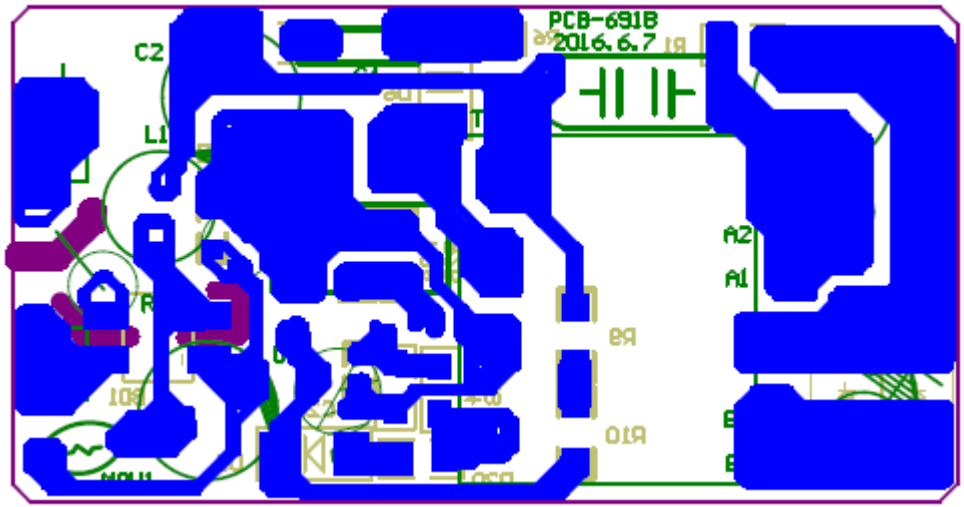
PCB-691B
2016.6.7
C2
L1
A2
A1