AP501
Antenna Test Report

Version:V1
2024-6-14

Table of Contents

1. Test Information 2
2. Testing Location 2
3. Test Frequency 2
4. Antenna Information 2
5. Test Configuration 3
6. Reference Calibration 4
7. Test Method 5
8. Measured Values and Calculation of Correlated / Uncorrelated Gains 5
9. Radiation Pattern 10

1. Test Information

Equipment	EMT Chamber
Applicant	Han-Networks
Manufacturer	AOT

2. Testing Location

Testing Location	
AOT	ADD: 289 Jinghua Road,Shipai, BachengTown, Kunshan City, Jiangsu Province

Test Condition	Test Engineer	Test Environment (°C / %)	Test Date
Radiated	Changgan Lai	20-24 / 45-60	5.27.2024~5.27.2024

3. Test Frequency

Band (MHz)	Test Frequency (MHz)
2400-2500	2450
5150-5850	5150/5500/5850
5925-7125	5925/6500/7125

4. Antenna Information

Ant. Position	Polarization Type	Ant. Type	Connector
Antenna 1 (2.4G/6G)	Vertical	Dipole	I-PEX
Antenna 2 (2.4G/6G)	Vertical	Dipole	I-PEX
Antenna 3 (5G)	Vertical	Dipole	I-PEX
Antenna 4 (5G)	Horizontal	Dipole	I-PEX

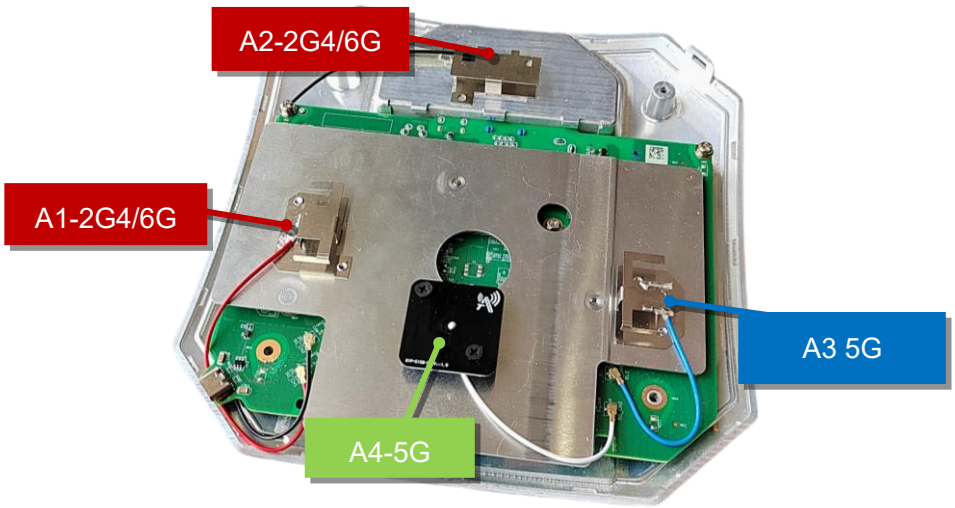

5. Test Configuration

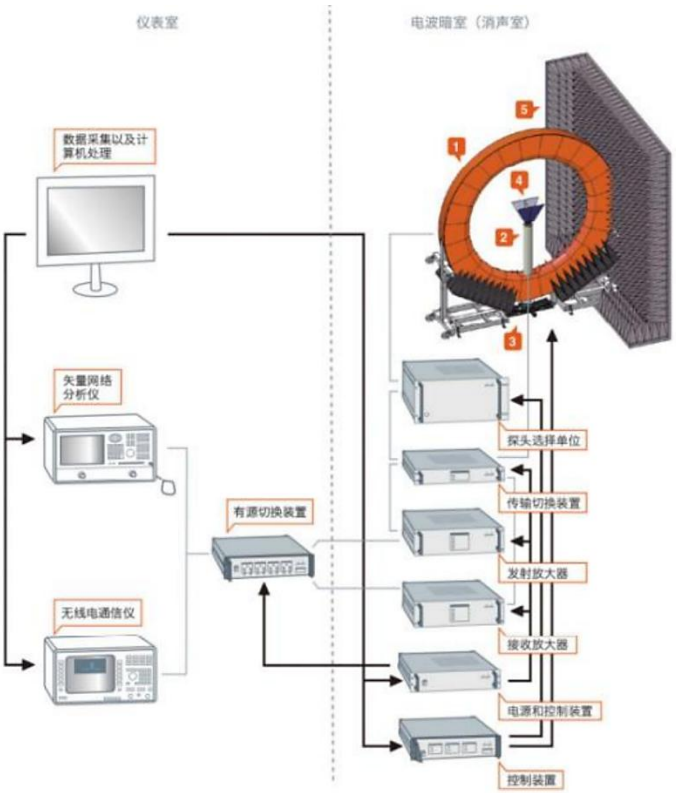

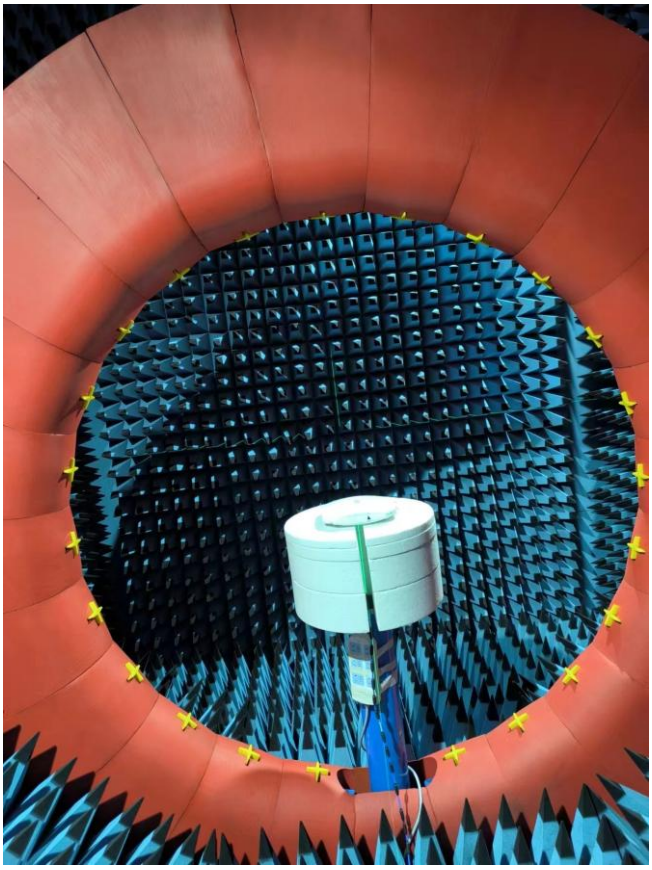

6. Reference Calibration

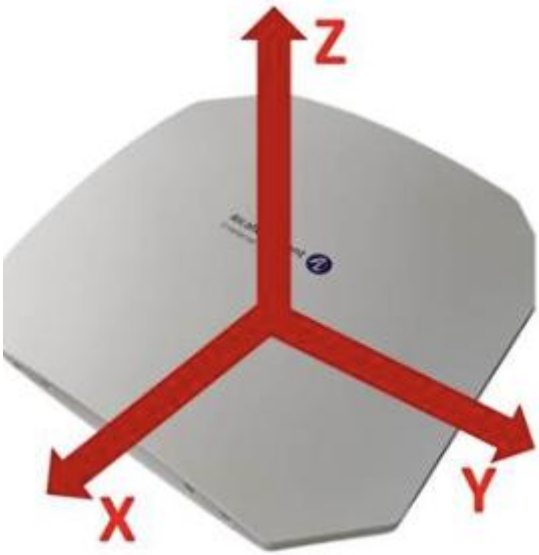

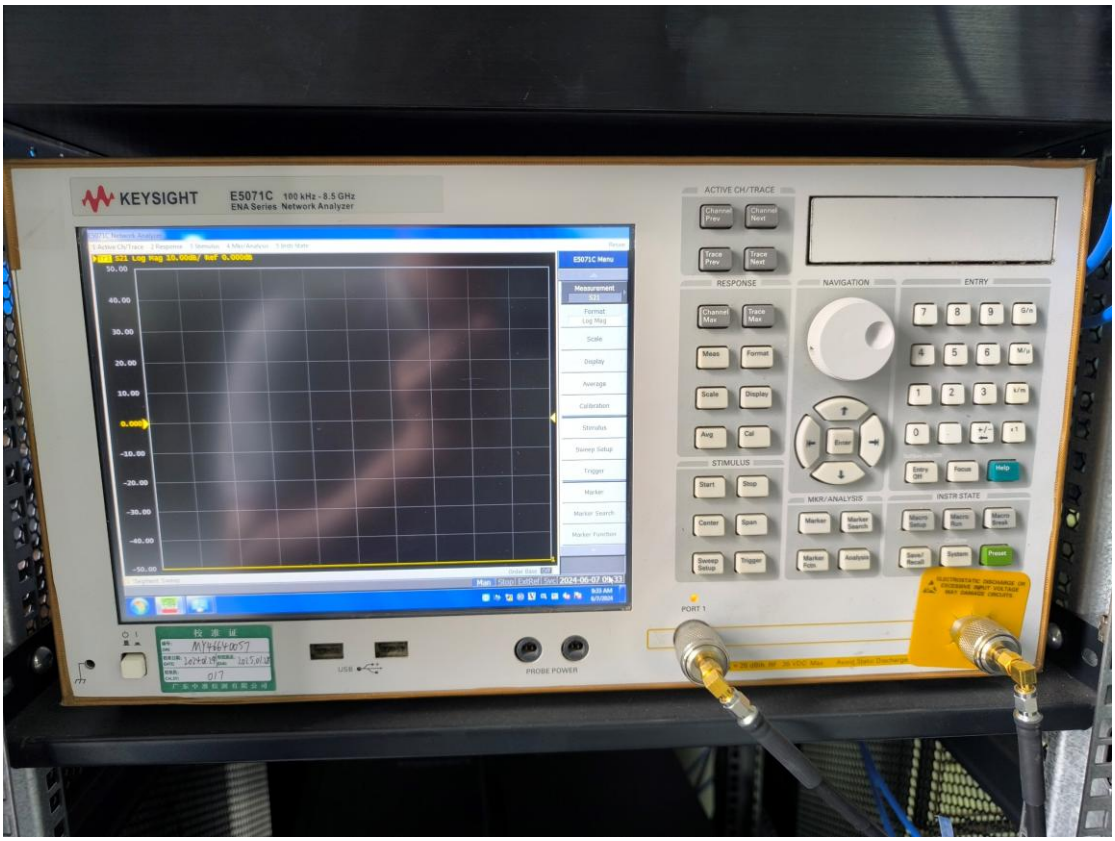

CALIBRATION PASS
CAL.DATA: 2024.1.29
NEXT CAL.DATA: 2025.1.29

7. Test Method

The “great circle” cut method, whereby the Measurement Antenna remains fixed and the EUT is rotated about two axes in sequential order. The radiated RF performance of the Equipment Under Test (EUT) is measured by sampling the radiated transmit power of the mobile at various locations surrounding the device. A three-dimensional characterization of the 'transmit' performance of the EUT is pieced together by analyzing the data from the spatially distributed measurements.

Data points taken every 2 degrees in the theta and in the phi axes are deemed sufficient to fully characterize the EUT's Far-Field radiation pattern and total radiated power All of the measured power values will be integrated.

8. Measured Values and Calculation of Correlated / Uncorrelated Gains

Summary of Antenna Peak Gain

Antenna Peak Gain Table (Ant. Position：2.4G Ant.1~2)

Band (MHz)	2400-2500
Ant.1 Max Gain (dBi)	5.6
Ant.2 Max Gain (dBi)	3.5

Antenna Peak Gain Table (Ant. Position：5G Ant.3~4)

Band (MHz)	5150 ~ 5350	5470 ~ 5725	5725 ~ 5850
Ant.3 Max Gain (dBi)	5.3	5.9	5.7
Ant.4 Max Gain (dBi)	4.6	4.3	3.7

Antenna Peak Gain Table (Ant. Position：6G Ant.1~2)

Band (MHz)	5925 ~ 6425	6425 ~ 6875	6875 ~ 7125
Ant.1 Max Gain (dBi)	6.4	6.4	5.9
Ant.1 Min Gain (dBi)	4.7		
Ant.2 Max Gain (dBi)	5.1	5.7	5.9
Ant.2 Min Gain (dBi)	4.0		

Result for Uncorrelated Gain and Correlated Gain

Maximum Correlated Gain Calculation

Because the antennas are fixed in location within the device the directional antenna gain for MIMO is calculated over a sphere using the raw spatial data taken at 10 degree steps of theta and 10 degree of theta phi for each antenna using the equations from KDB 662911 D01. The raw antenna data is located in the appendix of this report.

The correlated antenna gain was calculated using KDB 662911 D01 F(2)(d)(i).

$$\text{Directional gain} = 10\log[(10^{G_1/20} + 10^{G_2/20} + \ldots + 10^{G_N/20})^2 / N_{ANT}]\ \text{dBi}$$

The uncorrelated antenna gain was calculated using KDB 662911 D01 F(2)(d)(ii)

$$\text{Directional gain} = 10\log[(10^{G_1/10} + 10^{G_2/10} + \ldots + 10^{G_N/10}) / N_{ANT}]\ \text{dBi}$$

The correlated gains were calculated for each point in the spatial data and the highest values reported.

Correlated Directional Gain for 2.4GHz (Ant. Position：2.4G Ant.1~2)

Frequency (MHz)	2450
Directional Gain	6.85

Ant.1~2 @2.45GHz

F=2450MHz R_total																																													
Phi(deg) Theta(deg)																																													
0.00	-180.00	-170.00	-160.00	-150.00	-140.00	-130.00	-120.00	-110.00	-100.00	-90.00	-80.00	-70.00	-60.00	-50.00	-40.00	-30.00	-20.00	-10.00	0.00	10.00	20.00	30.00	40.00	50.00	60.00	70.00	80.00	90.00	100.00	110.00	120.00	130.00	140.00	150.00	160.00	170.00	180.00
0.00	-7.93	-6.29	-3.78	-5.99	-5.02	-1.28	0.14	0.90	1.74	2.84	4.25	5.44	6.21	6.42	5.54	4.12	3.60	3.39	1.69	-0.01	1.07	1.85	2.95	3.87	3.78	2.74	0.98	-0.90	-1.78	-1.33	-0.44	0.00	-2.40	-7.94	-7.26	-8.69	-7.93
10.00	-7.93	-6.93	-3.70	-5.80	-4.08	-1.01	0.02	0.69	1.75	3.16	4.73	6.01	6.77	6.85	5.90	4.53	3.94	3.53	1.69	-0.49	0.17	1.26	2.79	3.80	3.72	3.09	1.79	-0.02	-0.71	0.14	0.92	0.99	-1.81	-8.92	-7.21	-6.54	-7.93
20.00	-7.93	-6.63	-3.60	-5.74	-4.29	-1.63	-0.86	-0.10	1.01	2.24	3.66	4.96	5.91	6.25	5.57	4.58	4.13	3.61	1.69	-0.98	-1.16	-0.11	1.43	2.10	1.78	1.03	-0.32	-1.51	-1.44	-0.74	-0.21	-0.12	-2.76	-7.51	-6.04	-7.75	-7.93
30.00	-7.93	-5.41	-3.63	-5.76	-4.59	-1.81	-0.43	0.65	1.49	2.56	3.95	5.09	5.58	5.43	4.57	4.10	4.16	3.62	1.69	-1.39	-2.98	-2.49	-1.44	-1.07	-1.12	-1.51	-2.10	-1.89	-1.46	-1.26	-1.60	-2.23	-4.32	-5.66	-4.47	-6.75	-7.93
40.00	-7.93	-5.34	-3.58	-4.84	-4.40	-1.81	-0.29	0.84	1.56	2.42	3.68	4.56	4.82	4.82	4.05	3.51	4.00	3.56	1.69	-1.63	-4.92	-5.68	-4.65	-3.06	-1.91	-1.29	-0.89	-0.43	-0.40	-0.68	-1.58	-2.83	-4.44	-3.97	-3.16	-5.93	-7.93
50.00	-7.93	-5.47	-3.19	-3.54	-4.18	-1.06	-0.42	0.78	1.50	2.34	3.61	4.46	4.58	4.13	3.36	3.08	3.71	3.42	1.69	-1.61	-5.85	-7.92	-6.12	-2.35	-0.61	0.21	0.56	0.66	0.07	-0.78	-2.16	-3.66	-4.53	-2.85	-2.39	-6.49	-7.93
60.00	-7.93	-5.81	-2.74	-2.52	-3.25	-2.08	-1.20	0.23	1.19	2.16	3.51	4.36	4.26	3.78	2.90	2.65	3.32	3.22	1.69	-1.35	-5.29	-7.78	-3.42	-0.81	0.55	1.03	0.88	0.31	-0.78	-2.16	-4.29	-6.11	-6.09	-2.50	-2.19	-5.51	-7.93
70.00	-7.93	-6.39	-2.65	-1.88	-2.44	-1.90	-2.07	-0.76	0.80	1.95	3.29	4.09	4.08	3.50	2.51	2.18	2.87	2.97	1.69	-0.92	-3.03	-4.36	-1.27	0.64	1.70	1.97	1.30	0.09	-1.28	-2.97	-4.89	-5.23	-4.22	-2.45	-2.53	-6.03	-7.93
80.00	-7.93	-7.19	-3.05	-1.78	-2.15	-1.47	-1.90	-1.66	0.00	1.47	2.61	3.51	3.75	3.23	2.24	1.67	2.39	2.68	1.69	-0.39	-2.24	-1.64	0.41	1.88	2.88	2.96	2.08	0.58	-0.81	-1.94	-2.37	-2.22	-2.48	-2.28	-3.36	-7.08	-7.93
90.00	-7.93	-8.07	-3.96	-2.48	-2.59	-1.52	-1.21	-1.25	-0.42	0.78	1.91	2.88	3.27	2.95	1.94	1.09	1.91	2.38	1.69	0.15	-0.95	-0.01	1.54	2.72	3.66	3.58	2.49	0.95	-1.14	-0.83	-0.07	-0.13	-1.22	-2.17	-4.70	-6.61	-7.93
100.00	-7.93	-8.71	-5.23	-4.07	-4.09	-2.65	-1.57	-0.84	-0.29	0.39	1.28	2.15	2.66	2.36	1.34	0.49	1.51	2.10	1.69	0.68	-0.05	0.68	1.91	2.95	3.79	3.65	2.69	0.97	-1.03	-1.15	-0.13	0.37	-0.58	-2.11	-6.38	-10.27	-7.93
110.00	-7.93	-8.76	-6.33	-6.84	-7.05	-4.77	-2.95	-1.57	-0.77	0.02	0.64	1.41	2.08	1.96	0.95	0.29	1.40	1.85	1.69	1.15	0.51	0.46	1.27	2.32	2.99	3.18	2.38	0.73	-1.14	-1.43	-1.08	-0.31	-0.45	-1.83	-6.98	-10.80	-7.93
120.00	-7.93	-8.30	-6.57	-6.78	-6.07	-6.70	-3.44	-2.01	-1.06	-0.09	0.64	1.36	2.05	2.03	1.15	0.89	1.68	1.64	1.69	1.58	0.87	-0.37	-0.44	0.65	1.72	2.01	1.59	0.47	-1.06	-1.47	-0.88	-0.69	-0.76	-1.44	-4.57	-10.14	-7.93
130.00	-7.93	-7.73	-6.11	-4.98	-5.62	-4.08	-3.07	-2.08	-0.96	0.14	0.86	1.73	2.55	2.61	1.82	1.75	2.10	1.47	1.69	1.96	1.16	-0.59	-1.73	-0.19	1.24	1.81	1.51	0.71	-0.42	-1.22	-0.94	-0.91	-1.56	-1.26	-3.65	-9.25	-7.93
140.00	-7.93	-7.37	-5.61	-4.76	-5.42	-4.18	-3.13	-2.60	-1.87	-0.62	0.51	1.71	2.64	2.89	2.29	2.35	2.38	1.29	1.69	2.31	1.52	0.53	0.59	1.76	3.17	3.70	3.26	2.16	0.63	-1.04	-2.21	-2.32	-2.72	-1.67	-3.18	-8.43	-7.93
150.00	-7.93	-7.36	-5.45	-5.44	-6.90	-5.23	-4.00	-2.30	-1.68	-1.44	0.22	1.57	2.29	2.75	2.23	2.45	2.39	1.07	1.69	2.64	1.97	1.71	3.18	4.32	4.67	5.05	4.66	3.66	2.27	0.52	-2.07	-3.63	-4.66	-2.88	-3.10	-7.72	-7.93
160.00	-7.93	-7.70	-5.76	-6.70	-7.50	-5.34	-3.94	-1.78	-0.42	0.25	1.46	2.33	2.63	2.64	2.00	2.21	2.13	0.78	1.69	2.93	2.53	2.50	4.16	5.61	6.08	5.98	5.33	4.25	3.13	1.99	-0.25	-3.76	-6.98	-4.38	-3.30	-7.15	-7.93
170.00	-7.93	-8.26	-6.50	-7.29	-4.75	-2.46	-2.09	-1.78	-1.48	-0.78	0.87	2.40	3.21	3.09	2.37	2.02	1.69	0.43	1.69	3.18	3.11	3.37	4.70	5.53	5.37	4.89	4.03	2.83	1.92	1.16	-0.21	-2.71	-6.81	-5.52	-3.61	-6.68	-7.93

Uncorrelated Directional Gain for 2.4GHz (Ant. Position：2.4G Ant.1~2)

Frequency (MHz)	2450
Directional Gain	4.00

Ant.1~2 @2.45GHz

F=2450MHz R_total																																													
			4.00																																										
Phi(deg) Theta(deg)																																													
0	-180	-170	-160	-150	-140	-130	-120	-110	-100	-90	-80	-70	-60	-50	-40	-30	-20	-10	0	10	20	30	40	50	60	70	80	90	100	110	120	130	140	150	160	170	180
0	-10.93	-9.15	-6.79	-8.68	-7.88	-4.27	-2.86	-2.10	-1.27	-0.17	1.25	2.45	3.23	3.47	2.61	1.14	0.60	0.38	-1.13	-2.41	-1.66	-0.80	0.22	0.95	0.84	-0.12	-1.65	-3.25	-4.49	-4.33	-3.27	-2.85	-5.39	-10.86	-10.27	-11.41	-10.93
10	-10.93	-8.72	-6.67	-8.61	-6.88	-3.94	-2.96	-2.30	-1.23	0.23	1.84	3.14	3.89	4.00	3.08	1.61	0.93	0.52	-1.13	-2.87	-2.50	-1.26	0.21	1.04	0.96	0.39	-0.81	-2.55	-3.48	-2.83	-2.08	-2.02	-4.73	-11.04	-10.22	-11.31	-10.93
20	-10.93	-8.37	-6.52	-8.69	-7.07	-4.61	-3.87	-3.11	-1.96	-0.67	0.79	2.08	3.03	3.42	2.83	1.72	1.13	0.61	-1.13	-3.33	-3.71	-2.47	-0.99	-0.46	-0.75	-1.52	-2.82	-3.94	-4.06	-3.53	-3.08	-2.97	-6.41	-10.26	-9.05	-10.63	-10.93
30	-10.93	-8.15	-6.49	-8.77	-7.41	-4.79	-3.44	-2.34	-1.40	-0.22	1.21	2.39	2.96	2.70	1.88	1.26	1.17	0.63	-1.13	-3.74	-5.34	-4.71	-3.55	-3.16	-3.27	-3.95	-4.54	-4.54	-4.25	-4.06	-4.41	-5.04	-7.10	-8.67	-7.48	-9.71	-10.93
40	-10.93	-8.11	-6.40	-7.85	-7.21	-4.80	-3.28	-2.16	-1.43	-0.50	0.81	1.73	2.03	2.14	1.45	0.66	1.03	0.59	-1.13	-4.05	-7.24	-6.02	-6.56	-5.43	-4.70	-4.23	-3.89	-3.44	-3.41	-3.68	-4.54	-5.81	-7.44	-6.94	-6.17	-8.92	-10.93
50	-10.93	-8.29	-6.04	-6.54	-7.05	-4.86	-3.32	-2.11	-1.47	-0.66	0.60	1.48	1.64	1.28	0.63	0.22	0.75	0.49	-1.13	-4.17	-6.61	-10.92	-6.03	-5.31	-3.41	-2.80	-2.45	-2.34	-2.93	-3.76	-5.10	-6.81	-7.52	-5.85	-5.40	-8.49	-10.93
60	-10.93	-8.70	-5.66	-5.53	-6.24	-5.08	-3.98	-2.45	-1.58	-0.70	0.57	1.38	1.27	0.78	-0.14	-0.24	0.38	0.33	-1.13	-4.07	-6.80	-9.39	-6.33	-3.81	-2.46	-1.98	-2.13	-2.70	-3.79	-5.15	-7.18	-8.89	-7.99	-5.50	-5.20	-8.51	-10.93
70	-10.93	-9.35	-5.62	-4.87	-5.43	-4.85	-4.78	-3.35	-1.87	-0.75	0.51	1.28	1.23	0.55	-0.50	-0.72	0.00	0.14	-1.13	-3.77	-6.73	-6.19	-3.90	-2.25	-1.25	-0.98	-1.65	-2.82	-4.11	-5.62	-7.52	-8.23	-7.20	-5.43	-5.53	-9.00	-10.93
80	-10.93	-10.19	-6.06	-4.78	-5.03	-4.23	-4.51	-4.34	-2.76	-1.23	-0.05	0.84	1.03	0.37	-0.77	-1.16	-0.34	-0.06	-1.13	-3.33	-5.03	-3.72	-1.97	-0.79	0.08	0.16	-0.65	-1.99	-2.94	-3.59	-4.69	-5.18	-5.49	-5.29	-6.25	-9.93	-10.93
90	-10.93	-11.07	-6.49	-5.33	-4.15	-3.80	-4.00	-3.31	-2.06	-0.86	0.14	0.47	-0.08	-1.15	-1.52	-0.58	-0.26	-1.13	-2.83	-3.68	-2.12	-0.71	0.19	0.94	0.87	-0.08	-1.42	-2.67	-2.80	-2.06	-3.13	-4.23	-5.16	-7.14	-11.16	-10.93
100	-10.93	-11.70	-6.19	-7.05	-6.93	-5.38	-4.38	-3.72	-3.24	-2.60	-1.70	-0.80	-0.32	-0.65	-1.48	-1.66	-0.68	-0.45	-1.13	-2.33	-2.74	-1.36	-0.27	0.44	1.09	0.94	0.10	-1.32	-2.93	-3.61	-3.12	-2.63	-3.59	-5.03	-7.14	-12.37	-10.93
110	-10.93	-11.77	-9.30	-8.71	-10.01	-7.77	-5.94	-4.58	-3.78	-2.99	-2.35	-1.56	-0.86	-0.88	-1.45	-1.50	-0.63	-0.62	-1.13	-1.86	-2.16	-1.41	-0.77	-0.19	0.29	0.43	-0.20	-1.53	-3.04	-3.90	-4.09	-3.24	-3.44	-4.77	-7.69	-13.03	-10.93
120	-10.93	-11.30	-9.57	-8.79	-10.58	-8.62	-6.41	-5.01	-4.05	-3.07	-2.31	-1.47	-0.65	-0.55	-0.97	-1.03	-0.46	-0.78	-1.13	-1.43	-1.83	-2.02	-2.07	-1.70	-0.97	-0.68	-0.97	-1.83	-2.91	-3.50	-3.73	-3.66	-3.70	-4.43	-7.16	-12.89	-10.93
130	-10.93	-10.69	-8.93	-7.86	-8.60	-7.04	-6.05	-5.01	-3.97	-2.78	-1.95	-1.02	-0.13	0.12	-0.36	-0.45	-0.26	-0.94	-1.13	-1.05	-1.57	-2.48	-3.11	-2.47	-1.50	-0.99	-1.26	-2.02	-2.91	-3.49	-3.64	-3.92	-4.50	-4.27	-6.55	-12.22	-10.93
140	-10.93	-10.26	-8.17	-7.40	-8.42	-7.11	-6.11	-5.60	-4.86	-3.39	-1.96	-0.74	0.14	0.44	0.05	-0.04	-0.16	-1.13	-1.13	-0.69	-1.27	-2.03	-2.01	-0.98	0.24	0.74	0.29	-0.62	-2.26	-3.71	-4.99	-5.32	-5.68	-4.65	-6.16	-11.44	-10.93
150	-10.93	-10.20	-7.82	-7.67	-9.78	-7.98	-6.88	-5.24	-4.54	-4.01	-2.28	-0.94	-0.14	0.39	0.03	-0.06	-0.27	-1.36	-1.13	-0.37	-0.88	-1.16	0.19	1.33	1.86	2.05	1.66	0.65	-0.72	-2.39	-4.06	-6.82	-7.61	-5.87	-6.10	-10.73	-10.93
160	-10.93	-10.50	-6.39	-6.60	-10.49	-6.31	-6.81	-4.76	-3.41	-2.64	-1.41	-0.56	-0.18	-0.09	-0.52	-0.41	-0.59	-1.05	-1.13	-0.08	-0.40	-0.47	1.15	2.61	3.08	2.99	2.33	1.25	0.12	-1.02	-3.22	-6.69	-9.89	-7.32	-6.31	-10.14	-10.93
170	-10.93	-11.01	-9.37	-10.04	-7.56	-5.01	-4.92	-4.78	-4.35	-3.61	-2.07	-0.59	0.22	0.12	-0.39	-0.66	-1.05	-2.00	-1.13	0.17	0.13	0.36	1.70	2.52	2.36	1.68	1.02	-0.17	-1.09	-1.85	-3.21	-5.70	-9.71	-6.30	-6.62	-9.62	-10.93

Correlated / Uncorrelated Directional Gain for 5GHz (Ant. Position：5G Ant.3~4)

Frequency (MHz)	5150	5500	5850
Directional Gain	3.75	4.21	3.9

Note: Two 5GHz outputs drive a cross-polarized pair of linearly polarized antennas. Therefore, the results are the same for correlated and uncorrelated gains.

Ant.3~4 @5.15GHz

F=5150MHz E_total Phi(deg) Theta(deg)	0	-180	-170	-160	-150	-140	-130	-120	-110	-100	-90	-80	-70	-60	-50	-40	-30	-20	-10	0	10	20	30	40	50	60	70	80	90	100	110	120	130	140	150	160	170	180
0.00	-20.43	-19.17	-15.02	-16.71	-9.01	-8.18	-7.33	-5.62	-5.39	-4.81	-1.69	0.76	2.11	2.72	1.34	-1.49	-1.72	-3.52	-5.37	-2.29	-1.06	-0.72	1.59	1.59	-0.38	-1.89	-3.59	-5.68	-6.43	-8.57	-8.94	-10.19	-12.84	-12.83	-14.07	-15.57	-20.43
10.00	-20.43	-17.65	-12.57	-16.37	-12.91	-11.70	-12.05	-8.27	-5.67	-3.50	-0.55	1.70	2.88	3.36	2.33	-0.27	-1.89	-3.67	-5.37	-2.40	-1.96	-1.00	1.33	1.28	1.52	1.54	0.13	-2.13	-4.05	-5.19	-5.90	-10.19	-9.63	-10.90	-13.97	-14.48	-20.43
20.00	-20.43	-18.80	-12.40	-15.34	-14.97	-11.20	-8.77	-6.64	-4.42	-1.52	1.47	3.15	3.52	2.90	2.29	0.49	-1.90	-3.71	-5.37	-2.58	-1.62	-0.31	0.78	1.39	2.62	2.74	1.35	-0.96	-2.81	-5.42	-5.72	-11.76	-15.57	-8.30	-15.03	-13.69	-20.43
30.00	-20.43	-19.88	-13.36	-15.30	-12.61	-13.35	-9.85	-6.82	-5.02	-1.73	1.53	3.12	3.28	2.53	2.13	1.01	-1.65	-3.61	-5.37	-2.76	-0.97	0.11	0.86	1.99	2.96	2.92	1.50	-0.31	-1.84	-4.45	-4.76	-9.75	-14.24	-10.00	-20.72	-13.49	-20.43
40.00	-20.43	-16.57	-13.34	-13.97	-14.58	-16.22	-7.17	-6.16	-5.94	-4.67	-1.42	0.28	1.47	2.32	2.21	1.23	-1.07	-3.33	-5.37	-2.95	-0.87	0.96	1.29	2.20	2.42	2.24	0.64	-1.15	-2.37	-4.36	-6.80	-10.39	-12.60	-8.26	-17.34	-13.09	-20.43
50.00	-20.43	-14.11	-11.02	-13.77	-12.63	-10.87	-8.51	-6.41	-4.91	-3.49	-1.02	0.27	0.57	1.24	1.97	1.04	-0.40	-2.91	-5.37	-3.14	-1.06	1.34	1.86	2.37	2.09	1.53	-0.29	-2.54	-4.09	-7.25	-8.92	-10.82	-12.67	-8.99	-15.10	-14.51	-20.43
60.00	-20.43	-14.92	-9.96	-14.61	-10.81	-9.21	-15.02	-9.79	-4.39	-1.68	1.09	2.46	1.87	0.72	1.31	0.84	0.06	-2.45	-5.37	-3.31	-1.38	1.36	1.95	2.04	1.52	0.57	-1.17	-3.71	-6.39	-8.99	-9.97	-12.75	-14.87	-8.89	-15.44	-14.68	-20.43
70.00	-20.43	-16.26	-10.96	-12.49	-15.66	-13.03	-15.37	-10.89	-6.59	-4.34	-1.06	1.04	1.46	0.95	1.21	0.71	0.14	-2.11	-5.37	-3.37	-1.70	0.95	1.37	1.17	0.78	0.13	-1.20	-3.60	-4.78	-7.12	-9.75	-14.31	-17.95	-15.14	-16.32	-14.40	-20.43
80.00	-20.43	-20.02	-14.00	-10.44	-14.77	-12.68	-12.96	-11.15	-7.46	-5.06	-3.39	-0.99	0.32	0.81	1.28	0.38	-0.17	-1.95	-5.37	-3.28	-1.84	0.59	0.87	0.73	0.60	0.39	-1.02	-3.32	-4.40	-6.49	-8.66	-13.15	-16.31	-11.97	-17.96	-14.24	-20.43
90.00	-20.43	-18.68	-17.59	-12.79	-9.32	-9.91	-14.26	-8.15	-4.95	-4.16	-2.33	-0.45	0.33	0.99	1.41	-0.07	-0.63	-1.95	-5.37	-3.06	-1.66	0.82	1.48	1.34	1.38	1.18	-0.08	-1.87	-2.90	-4.04	-6.17	-9.89	-12.95	-12.09	-18.03	-14.45	-20.43
100.00	-20.43	-14.94	-15.57	-19.11	-11.68	-10.19	-11.05	-9.25	-6.81	-3.76	-1.12	0.35	0.82	1.39	1.58	0.85	-0.88	-2.04	-5.37	-2.78	-1.24	1.44	2.67	2.18	0.92	0.24	-1.33	-3.64	-5.46	-6.91	-9.05	-8.99	-11.27	-12.90	-16.72	-14.88	-20.43
110.00	-20.43	-13.88	-12.49	-12.33	-9.78	-9.26	-9.76	-9.26	-5.95	-3.90	-1.48	0.12	0.88	1.54	1.94	0.85	-0.77	-2.14	-5.37	-2.52	-0.76	1.76	3.08	2.54	0.92	0.02	-1.52	-4.11	-6.94	-9.82	-10.97	-9.42	-13.40	-13.75	-16.22	-15.23	-20.43
120.00	-20.43	-12.78	-12.51	-10.63	-12.03	-12.01	-11.12	-8.60	-6.01	-4.11	-1.91	-0.12	0.66	1.32	1.85	1.28	-0.56	-2.24	-5.37	-2.38	-0.32	1.58	2.55	2.21	1.47	1.05	-0.12	-2.31	-4.97	-6.85	-10.07	-10.40	-12.96	-13.36	-16.20	-15.30	-20.43
130.00	-20.43	-13.17	-14.41	-11.98	-12.67	-12.90	-10.50	-8.08	-4.90	-3.39	-1.46	-0.14	0.39	0.57	0.91	0.41	-0.47	-2.32	-5.37	-2.37	-0.04	1.08	1.69	2.29	2.79	2.36	0.95	-1.33	-3.71	-6.53	-8.71	-10.91	-12.07	-14.50	-15.17	-15.27	-20.43
140.00	-20.43	-13.58	-11.17	-9.76	-9.47	-11.47	-9.13	-6.96	-5.17	-3.88	-2.01	-1.12	-0.98	-0.89	-1.04	-1.12	-0.29	-2.37	-5.37	-2.48	-0.09	0.54	1.19	2.00	2.54	2.12	0.80	-1.26	-2.80	-4.92	-6.51	-12.47	-12.73	-14.56	-14.18	-15.56	-20.43
150.00	-20.43	-14.32	-9.71	-9.06	-11.38	-7.80	-6.02	-6.34	-5.42	-2.57	-0.52	0.40	0.36	-0.52	-1.71	-1.05	0.23	-2.37	-5.37	-2.68	-0.51	0.60	2.08	3.21	2.85	1.82	-0.03	-2.73	-4.24	-5.47	-8.06	-11.67	-12.75	-16.68	-15.58	-16.75	-20.43
160.00	-20.43	-15.58	-12.95	-11.46	-6.99	-6.75	-6.75	-6.03	-2.41	-1.11	0.39	1.53	1.90	1.24	0.12	0.63	0.49	-2.32	-5.37	-2.95	-0.99	-0.56	2.68	3.75	3.07	1.79	-0.12	-2.42	-3.78	-5.94	-7.74	-11.20	-12.32	-19.86	-18.41	-19.35	-20.43
170.00	-20.43	-16.22	-14.91	-10.97	-9.14	-9.61	-5.36	-2.65	-1.54	-0.35	1.69	3.38	3.48	3.13	1.77	0.37	-0.06	-2.27	-5.37	-3.26	-1.23	-1.41	1.32	2.34	1.63	0.66	-1.04	-3.45	-3.77	-3.93	-5.88	-9.19	-10.64	-18.17	-19.94	-21.47	-20.43

Ant.3~4 @5.5GHz

F=5500MHz E_total Phi(deg) Theta(deg)	0	-180	-170	-160	-150	-140	-130	-120	-110	-100	-90	-80	-70	-60	-50	-40	-30	-20	-10	0	10	20	30	40	50	60	70	80	90	100	110	120	130	140	150	160	170	180
0.00	-21.32	-17.62	-19.64	-13.68	-11.18	-8.88	-6.30	-7.59	-7.31	-4.09	-0.95	1.35	3.03	4.14	2.64	-1.37	-1.52	-3.33	-2.00	-1.65	-1.32	-0.44	0.15	-0.89	-0.58	-0.33	-1.63	-4.10	-5.70	-8.32	-9.50	-11.26	-12.14	-14.12	-14.70	-16.20	-21.32
10.00	-21.32	-17.49	-20.41	-11.68	-11.79	-11.02	-8.83	-7.36	-7.16	-3.65	-0.28	2.15	3.39	3.59	1.94	-1.47	-2.02	-4.04	-2.00	-1.68	-1.22	0.44	1.10	1.01	2.32	2.36	1.06	-1.14	-3.10	-5.35	-5.88	-11.94	-11.08	-14.33	-16.65	-15.67	-21.32
20.00	-21.32	-18.16	-15.51	-15.77	-12.16	-11.66	-7.65	-6.08	-4.84	-2.03	1.31	3.43	4.21	3.69	2.34	-0.96	-2.11	-4.38	-2.00	-1.76	-0.96	0.93	1.22	1.64	2.92	2.72	1.31	-0.67	-2.19	-4.37	-5.22	-11.04	-11.47	-15.40	-21.28	-15.63	-21.32
30.00	-21.32	-19.88	-13.52	-16.66	-14.70	-11.27	-6.94	-5.78	-3.06	-0.81	2.17	3.44	3.04	3.03	2.95	0.01	-1.81	-4.19	-2.00	-1.89	-1.16	0.77	1.41	1.62	2.28	1.66	-0.32	-2.88	-4.06	-5.51	-4.63	-10.06	-10.75	-14.20	-20.73	-16.30	-21.32
40.00	-21.32	-19.82	-14.12	-14.66	-16.46	-13.66	-7.13	-7.56	-7.95	-3.60	0.12	1.71	1.45	1.33	2.04	0.41	-1.00	-3.54	-2.00	-2.13	-1.40	1.02	0.89	1.56	2.65	2.28	0.45	-1.93	-3.80	-6.80	-8.20	-13.73	-14.00	-12.97	-18.51	-17.30	-21.32
50.00	-21.32	-17.02	-15.04	-14.26	-12.98	-15.27	-8.39	-7.09	-6.77	-4.36	-1.64	0.09	0.96	0.75	1.44	0.53	-0.14	-2.72	-2.00	-2.49	-1.03	1.28	0.69	1.95	2.69	2.41	0.32	-2.44	-4.33	-7.96	-10.81	-17.61	-17.82	-14.59	-18.05	-17.60	-21.32
60.00	-21.32	-15.28	-11.74	-13.18	-11.70	-11.02	-11.44	-10.05	-5.11	-2.06	-0.31	0.64	1.22	0.82	1.17	0.59	0.18	-2.03	-2.00	-2.91	-0.49	1.53	0.41	1.45	1.63	0.95	-1.15	-4.17	-6.30	-10.54	-13.82	-17.80	-17.84	-17.76	-18.86	-17.13	-21.32
70.00	-21.32	-15.78	-9.57	-11.94	-10.37	-14.67	-10.41	-9.14	-7.00	-3.62	-0.49	1.21	1.66	1.23	1.41	0.78	-0.11	-1.65	-2.00	-3.22	-0.21	1.65	0.06	0.71	0.25	-0.42	-1.96	-4.17	-6.58	-9.29	-11.45	-13.56	-15.41	-17.49	-18.22	-17.12	-21.32
80.00	-21.32	-19.32	-10.74	-10.80	-14.61	-13.12	-9.31	-6.06	-5.50	-4.56	-1.40	0.74	1.36	0.90	1.74	0.92	-0.63	-1.59	-2.00	-3.28	-0.19	1.62	0.13	0.59	0.19	-0.42	-1.89	-3.85	-5.31	-8.52	-6.64	-12.61	-15.73	-12.71	-17.61	-18.22	-21.32
90.00	-21.32	-22.17	-14.36	-13.59	-11.88	-12.46	-13.05	-5.65	-3.92	-4.05	-2.15	0.37	1.42	1.05	1.48	0.91	-0.66	-1.79	-2.00	-3.05	-0.17	1.57	0.78	1.86	2.05	1.14	-0.72	-3.14	-5.11	-6.79	-6.39	-9.74	-13.62	-9.24	-16.79	-19.74	-21.32
100.00	-21.32	-16.56	-14.75	-15.57	-14.30	-9.87	-10.35	-9.84	-6.64	-6.24	-2.76	-0.09	1.44	1.29	1.12	1.31	-0.03	-2.12	-2.00	-2.65	-0.06	1.78	1.10	2.35	3.04	2.01	-0.06	-2.44	-4.83	-6.83	-8.48	-11.84	-13.05	-8.24	-16.60	-19.87	-21.32
110.00	-21.32	-14.04	-12.49	-13.07	-12.69	-12.86	-10.93	-10.23	-8.09	-6.30	-3.68	-1.26	0.53	1.31	1.57	1.92	0.54	-2.47	-2.00	-2.26	-0.03	2.15	1.38	0.54	0.91	0.66	-0.74	-2.44	-4.46	-6.49	-9.84	-13.07	-12.59	-9.19	-15.12	-19.26	-21.32
120.00	-21.32	-14.76	-12.94	-16.31	-14.90	-14.90	-13.14	-11.21	-8.52	-6.61	-3.46	-1.09	0.17	0.89	1.12	1.56	0.50	-2.73	-2.00	-2.00	-0.25	2.10	2.26	0.92	0.02	0.18	-0.48	-1.95	-3.31	-5.43	-9.24	-12.95	-13.45	-11.22	-13.19	-19.71	-21.32
130.00	-21.32	-18.39	-16.08	-15.29	-12.46	-11.98	-10.09	-8.50	-6.20	-4.53	-2.51	-1.06	-0.47	-0.77	-0.87	-0.31	-0.18	-2.79	-2.00	-1.89	-0.40	1.10	2.46	2.16	1.76	1.55	0.65	-0.94	-2.03	-3.60	-5.97	-13.67	-16.32	-11.34	-12.79	-21.37	-21.32
140.00	-21.32	-21.39	-12.99	-10.89	-12.47	-12.31	-9.07	-6.97	-6.05	-4.29	-2.18	-1.52	-1.35	-0.84	-1.19	-2.29	-1.09	-2.63	-2.00	-1.87	-0.86	-0.16	2.17	2.70	2.51	1.62	-0.25	-2.54	-3.52	-4.54	-6.14	-11.48	-14.09	-13.92	-13.11	-21.30	-21.32
150.00	-21.32	-18.78	-12.89	-13.34	-13.63	-9.48	-7.79	-7.64	-4.74	-2.82	-1.36	-0.72	0.15	1.19	-0.03	-2.29	-1.57	-2.32	-2.00	-1.92	-1.06	-0.37	1.92	3.15	3.25	2.56	0.42	-2.79	-4.48	-5.10	-6.20	-9.40	-14.03	-15.05	-12.86	-19.00	-21.32
160.00	-21.32	-17.11	-16.19	-12.04	-10.00	-10.24	-9.17	-6.48	-4.24	-2.78	-0.59	1.29	2.74	3.91	1.62	-1.24	-1.60	-2.00	-2.00	-2.14	-1.04	-0.85	2.03	2.51	1.31	0.39	-1.25	-4.09	-6.16	-6.06	-5.75	-8.54	-12.72	-15.65	-13.27	-17.73	-21.32
170.00	-21.32	-16.64	-15.32	-12.35	-12.48	-10.53	-6.75	-5.43	-3.56	-1.44	0.80	2.15	2.41	2.32	1.32	-0.76	-1.43	-1.75	-2.00	-2.61	-1.00	-1.28	2.21	3.65	2.52	1.16	-0.54	-3.58	-7.17	-8.66	-7.70	-10.10	-11.91	-16.81	-15.47	-17.64	-21.32

Ant.3~4 @5.85GHz

F=5850MHz E_total Phi(deg) Theta(deg)	0	-180	-170	-160	-150	-140	-130	-120	-110	-100	-90	-80	-70	-60	-50	-40	-30	-20	-10	0	10	20	30	40	50	60	70	80	90	100	110	120	130	140	150	160	170	180
0.00	-23.87	-17.21	-18.55	-15.41	-9.52	-9.16	-8.57	-7.18	-4.62	-2.53	0.44	2.53	3.89	3.90	0.64	-1.22	-0.32	-2.08	-4.73	-6.28	-4.75	-1.53	-3.13	-2.05	-1.45	-1.81	-2.71	-4.08	-5.58	-8.86	-9.60	-13.64	-14.27	-12.11	-16.81	-15.93	-23.87
10.00	-23.87	-16.79	-21.10	-14.18	-10.20	-9.09	-7.93	-9.21	-6.55	-3.21	0.27	2.48	3.60	3.89	0.95	-1.71	-1.37	-2.22	-4.73	-6.68	-4.85	-0.35	0.43	2.16	2.25	1.09	0.35	-2.37	-4.64	-6.16	-6.69	-14.06	-14.69	-14.14	-21.06	-17.97	-23.87
20.00	-23.87	-18.14	-20.32	-13.43	-12.57	-10.18	-7.79	-9.50	-6.96	-2.18	0.89	2.62	2.88	2.21	0.26	-2.13	-2.69	-2.70	-4.73	-6.21	-2.78	0.76	0.22	1.02	2.15	1.55	-0.20	-2.36	-4.32	-7.48	-6.39	-13.97	-12.41	-15.34	-20.66	-20.80	-23.87
30.00	-23.87	-21.38	-14.60	-15.24	-12.72	-9.82	-6.16	-7.51	-6.43	-2.26	1.20	3.06	3.39	2.53	0.84	-2.15	-3.58	-3.45	-4.73	-4.50	-1.85	0.75	0.15	-0.14	1.01	0.73	-1.02	-3.20	-4.96	-6.04	-6.94	-12.97	-12.35	-14.79	-19.94	-22.94	-23.87
40.00	-23.87	-22.69	-13.64	-16.49	-15.53	-16.01	-8.07	-8.95	-7.76	-3.05	0.36	1.77	2.11	2.00	0.60	-1.30	-3.06	-4.29	-4.73	-3.93	-0.95	1.15	0.74	1.41	1.70	0.74	-1.33	-3.55	-5.22	-6.69	-7.23	-10.94	-13.21	-14.57	-19.96	-22.38	-23.87
50.00	-23.87	-19.80	-16.10	-13.49	-17.31	-13.95	-9.85	-9.58	-7.44	-5.09	-2.58	-1.66	-1.68	-0.39	0.14	-0.77	-2.11	-4.92	-4.73	-3.60	-0.06	1.10	1.24	2.50	2.48	1.45	-0.41	-2.99	-5.72	-9.44	-11.70	-13.42	-18.08	-14.26	-21.43	-20.79	-23.87
60.00	-23.87	-17.83	-16.18	-11.83	-20.12	-14.21	-13.36	-10.09	-4.60	-2.99	-1.24	-0.16	-0.18	0.22	0.40	-0.79	-1.94	-5.23	-4.73	-3.50	0.44	0.90	1.45	2.90	2.46	1.63	0.30	-1.73	-4.14	-6.59	-12.72	-15.95	-17.39	-13.41	-19.76	-19.78	-23.87
70.00	-23.87	-17.73	-14.86	-12.85	-19.17	-16.62	-11.55	-12.54	-7.95	-4.29	-0.78	1.23	1.54	1.61	0.99	-0.95	-2.32	-5.36	-4.73	-3.68	0.52	0.67	1.56	2.80	2.13	1.41	-0.56	-2.16	-3.15	-6.36	-9.66	-11.66	-16.28	-12.75	-15.91	-19.27	-23.87
80.00	-23.87	-19.44	-14.70	-12.65	-17.63	-14.64	-9.82	-8.10	-7.55	-4.97	-0.63	1.47	1.28	1.32	1.75	-0.05	-2.35	-5.50	-4.73	-3.85	0.41	0.46	1.79	2.61	1.60	0.93	-1.06	-3.08	-3.48	-5.47	-7.42	-10.07	-17.55	-11.92	-15.35	-18.72	-23.87
90.00	-23.87	-20.42	-16.22	-14.10	-13.12	-16.95	-8.48	-3.59	-2.83	-2.52	0.73	2.42	1.76	0.61	1.33	0.82	-1.96	-5.69	-4.73	-4.13	0.35	0.45	2.29	3.20	2.14	1.60	0.23	-2.12	-3.83	-6.28	-7.52	-7.84	-14.53	-8.77	-15.28	-17.05	-23.87
100.00	-23.87	-17.87	-17.98	-14.40	-15.27	-12.48	-11.50	-7.25	-4.28	-3.33	-0.81	0.87	1.00	0.24	0.78	1.03	-1.64	-5.87	-4.73	-4.30	0.37	0.61	2.20	3.25	2.51	1.75	0.70	-0.94	-3.86	-7.14	-10.58	-6.64	-14.19	-6.71	-14.84	-17.08	-23.87
110.00	-23.87	-16.06	-17.02	-14.97	-15.59	-13.21	-14.28	-10.30	-6.13	-4.69	-2.51	-0.42	0.43	0.75	1.03	0.57	-1.63	-5.93	-4.73	-4.28	0.47	0.87	1.72	2.31	1.16	-0.05	-0.69	-2.03	-3.75	-5.72	-9.32	-10.01	-12.73	-7.15	-14.63	-16.69	-23.87
120.00	-23.87	-16.35	-18.60	-21.81	-16.45	-12.65	-10.03	-10.30	-8.86	-5.37	-2.67	-1.81	-0.19	0.18	0.96	-1.01	-2.17	-5.80	-4.73	-4.10	0.48	1.12	1.41	1.43	0.75	0.76	0.10	-1.27	-1.73	-2.90	-5.59	-11.81	-13.24	-8.47	-13.36	-16.48	-23.87
130.00	-23.87	-18.08	-18.05	-20.67	-14.42	-12.20	-11.19	-11.04	-8.75	-6.48	-3.60	-1.82	-1.10	-0.99	-1.38	-2.65	-3.17	-5.58	-4.73	-3.87	0.23	0.74	1.56	1.71	1.23	1.16	0.05	-2.19	-3.60	-3.60	-3.94	-10.52	-10.93	-11.69	-12.16	-16.32	-23.87
140.00	-23.87	-18.29	-15.34	-17.03	-16.84	-12.87	-10.35	-10.24	-7.99	-5.64	-3.42	-1.80	-0.96	-0.53	-1.33	-2.91	-4.20	-5.49	-4.73	-3.56	-0.35	-0.55	1.33	2.35	1.96	0.99	-0.60	-3.70	-6.06	-7.07	-6.67	-11.54	-15.78	-14.77	-11.97	-16.26	-23.87
150.00	-23.87	-16.39	-15.49	-15.04	-15.29	-15.79	-10.68	-8.96	-6.54	-4.56	-1.87	0.08	0.92	0.22	-0.96	-1.95	-4.73	-5.67	-4.73	-3.11	-0.44	-1.50	0.92	2.76	2.10	0.98	-1.08	-4.18	-7.44	-6.24	-6.51	-9.62	-13.21	-14.85	-12.43	-16.59	-23.87
160.00	-23.87	-15.12	-16.25	-12.30	-14.26	-12.69	-9.65	-8.65	-5.94	-3.51	-1.02	0.68	1.44	1.17	0.36	-0.25	-4.74	-6.01	-4.73	-2.62	-0.35	-0.78	1.34	3.02	2.30	1.44	-0.25	-3.21	-6.16	-9.79	-6.50	-9.52	-11.43	-13.18	-12.66	-17.47	-23.87
170.00	-23.87	-14.99	-14.22	-11.87	-12.04	-11.14	-7.08	-6.31	-3.29	-1.22	0.68	1.18	0.49	-1.05	-1.10	-6.45	-4.78	-6.28	-4.73	-2.23	-0.62	-0.92	0.36	2.72	1.88	1.24	0.27	-2.32	-6.08	-10.87	-6.41	-10.13	-12.99	-14.91	-14.36	-17.96	-23.87

Correlated Directional Gain for 6GHz (Ant. Position：6G Ant.1~2)

Frequency (MHz)	5925	6500	7125
Directional Gain	6.22	6.88	6.87

Ant.1~2 @5.925GHz

f=5925MHz E_total
Phi(deg) Theta(deg)

	-180.00	-170.00	-160.00	-150.00	-140.00	-130.00	-120.00	-110.00	-100.00	-90.00	-80.00	-70.00	-60.00	-50.00	-40.00	-30.00	-20.00	-10.00	0.00	10.00	20.00	30.00	40.00	50.00	60.00	70.00	80.00	90.00	100.00	110.00	120.00	130.00	140.00	150.00	160.00	170.00	180.00
0.00	-19.30	-15.32	-10.09	-6.07	-5.20	-3.59	-2.34	-1.63	-0.24	0.75	2.77	3.90	3.13	1.75	2.38	1.30	3.29	-1.99	3.33	1.01	2.10	-0.67	0.83	1.94	1.99	1.94	0.59	-1.90	-4.16	-7.44	-9.01	-10.25	-6.40	-10.53	-13.10	-14.06	-19.30
10.00	-19.30	-15.00	-8.19	-7.62	-3.12	-3.01	-0.25	0.97	1.94	3.13	5.09	5.82	4.94	4.16	4.33	2.54	1.12	-1.29	3.33	0.71	1.72	0.77	2.95	5.44	5.74	5.00	3.17	0.27	-1.56	-3.14	-5.68	-9.67	-6.54	-7.26	-9.47	-12.35	-19.30
20.00	-19.30	-14.49	-6.30	-6.26	-4.74	-4.56	-1.50	-0.05	1.74	2.97	4.68	5.68	**6.22**	6.00	3.82	1.95	1.44	-0.62	3.33	0.28	0.92	0.97	1.33	2.90	4.28	4.40	2.86	0.58	-0.95	-4.05	-6.83	-6.06	-6.91	-11.90	-9.57	-11.36	-19.30
30.00	-19.30	-14.67	-10.55	-9.81	-7.49	-6.32	-2.70	-1.46	0.93	2.48	4.02	4.73	5.09	4.83	2.96	3.06	1.25	0.08	3.33	-0.03	-1.12	0.17	2.34	2.95	1.94	1.28	0.06	-2.45	-5.73	-9.03	-5.80	-5.40	-6.97	-10.06	-11.55	-11.71	-19.30
40.00	-19.30	-13.84	-12.35	-11.49	-8.09	-7.59	-3.62	-1.24	1.23	2.21	3.45	3.90	4.19	3.09	2.87	2.85	1.11	0.83	3.33	-0.11	-3.00	-0.49	2.27	2.79	2.21	1.51	-0.03	-2.81	-5.02	-6.67	-6.41	-6.09	-7.99	-10.05	-10.33	-12.58	-19.30
50.00	-19.30	-12.13	-13.05	-11.06	-6.67	-6.50	-2.67	-1.17	0.82	2.28	4.08	5.20	5.54	4.74	3.43	2.92	0.11	1.51	3.33	-0.10	-2.17	0.78	1.01	1.69	4.18	5.05	3.87	1.47	-1.79	-5.09	-3.55	-4.22	-7.96	-14.13	-9.45	-12.32	-19.30
60.00	-19.30	-10.94	-12.38	-11.59	-6.17	-5.19	-2.51	-1.66	0.54	2.14	3.63	4.29	3.81	2.92	2.20	0.46	0.30	2.03	3.33	-0.19	-0.79	0.43	0.36	2.07	4.54	5.11	3.60	0.45	-2.18	-5.00	-5.08	-6.69	-4.82	-9.71	-6.97	-12.14	-19.30
70.00	-19.30	-11.52	-12.00	-11.33	-6.33	-6.27	-2.95	-2.44	-1.31	0.16	2.24	3.62	3.53	3.04	1.90	0.90	1.98	2.31	3.33	-0.39	-0.21	-2.04	-0.69	1.19	1.05	1.60	1.35	-0.18	-3.38	-7.18	-5.06	-4.02	-4.04	-10.12	-10.26	-13.26	-19.30
80.00	-19.30	-14.11	-13.81	-10.34	-5.62	-4.18	-1.94	-0.94	0.71	1.38	2.32	2.67	2.77	3.96	2.84	2.21	3.14	2.32	3.33	-0.59	-0.06	-2.68	1.15	3.27	3.68	3.68	1.88	-1.39	-3.06	-3.42	-4.04	-6.09	-3.82	-7.51	-9.03	-15.64	-19.30
90.00	-19.30	-13.95	-10.91	-7.65	-6.58	-4.42	-2.25	-2.39	0.15	1.55	3.09	4.04	4.42	5.05	3.67	2.77	3.49	2.03	3.33	-0.75	0.12	-0.97	0.89	2.96	3.60	3.32	1.70	-1.40	-3.65	-3.35	-4.05	-6.84	-5.67	-6.56	-6.02	-16.14	-19.30
100.00	-19.30	-12.59	-8.20	-6.10	-5.71	-5.20	-2.53	-2.32	-0.50	1.05	3.04	4.63	5.37	5.00	4.26	3.02	3.17	1.49	3.33	-1.00	0.17	-0.33	-0.88	0.81	2.67	2.40	0.83	-1.72	-3.62	-4.46	-4.76	-6.72	-6.56	-10.05	-6.90	-14.69	-19.30
110.00	-19.30	-12.61	-8.99	-8.00	-5.55	-4.79	-3.86	-3.83	-0.63	1.88	3.91	4.90	4.86	4.95	4.30	4.10	2.22	0.79	3.33	-1.43	0.10	0.82	0.80	1.72	2.77	2.17	1.94	-0.17	-1.75	-2.81	-4.21	-7.30	-4.47	-8.48	-10.85	-14.07	-19.30
120.00	-19.30	-13.92	-8.78	-6.69	-6.29	-5.79	-4.52	-2.78	0.31	2.38	4.01	5.48	5.15	4.65	4.28	5.64	2.06	0.23	3.33	-2.08	0.50	2.73	3.37	4.25	4.86	4.47	3.31	1.65	0.45	-2.37	-1.71	-5.61	-7.84	-7.53	-12.22	-14.53	-19.30
130.00	-19.30	-15.12	-9.22	-6.09	-7.10	-5.20	-1.42	-1.38	1.84	3.57	4.63	4.40	3.64	3.68	4.16	5.01	2.98	0.02	3.33	-2.86	1.07	3.66	4.23	3.06	4.16	5.60	5.49	4.30	3.16	0.27	-1.90	-4.27	-6.74	-12.98	-12.34	-15.71	-19.30
140.00	-19.30	-14.18	-11.99	-9.31	-9.39	-6.68	-2.23	-3.20	-0.42	1.90	3.52	3.92	3.50	3.18	2.34	2.77	3.59	0.24	3.33	-3.43	1.52	2.95	3.34	3.25	4.68	5.56	5.05	3.28	1.62	0.60	-0.04	-6.35	-6.87	-10.39	-15.90	-15.80	-19.30
150.00	-19.30	-12.69	-12.41	-10.51	-6.34	-6.07	-3.67	-3.64	-2.13	-0.83	1.19	2.45	2.41	2.00	1.63	0.11	4.02	0.62	3.33	-3.48	1.49	1.37	1.33	2.40	4.07	4.63	4.46	3.36	1.77	-1.14	-2.22	-6.06	-9.07	-7.77	-14.80	-14.41	-19.30
160.00	-19.30	-12.54	-11.06	-7.15	-7.99	-5.26	-6.32	-3.51	-0.33	1.14	3.25	4.56	3.96	2.76	3.09	1.26	3.70	0.93	3.33	-3.10	0.82	-0.23	1.20	2.40	3.45	3.93	3.15	1.59	-0.07	-2.62	-3.70	-4.97	-6.96	-7.33	-11.40	-13.41	-19.30
170.00	-19.30	-13.88	-13.95	-9.21	-7.31	-6.82	-4.12	-2.02	0.59	2.48	4.90	6.01	4.55	0.00	-0.03	-0.35	2.76	1.08	3.33	-2.60	0.28	-0.49	0.99	1.44	2.99	4.12	3.16	0.96	-0.76	-2.95	-3.03	-4.48	-6.71	-6.17	-10.82	-13.66	-19.30

Ant.1~2 @6.5GHz

f=6500MHz E_total
Phi(deg) Theta(deg)

	-180.00	-170.00	-160.00	-150.00	-140.00	-130.00	-120.00	-110.00	-100.00	-90.00	-80.00	-70.00	-60.00	-50.00	-40.00	-30.00	-20.00	-10.00	0.00	10.00	20.00	30.00	40.00	50.00	60.00	70.00	80.00	90.00	100.00	110.00	120.00	130.00	140.00	150.00	160.00	170.00	180.00
0.00	-24.32	-15.56	-7.74	-6.26	-4.70	-4.38	-1.53	-1.72	0.95	2.42	4.35	5.05	5.09	5.78	3.72	3.30	0.06	-4.27	-1.17	-2.47	0.39	-0.34	-0.47	1.98	4.68	5.20	3.91	1.10	-1.38	-4.43	-6.18	-11.05	-10.87	-7.87	-10.29	-13.98	-24.32
10.00	-24.32	-13.00	-6.49	-4.58	-5.38	-4.45	-1.45	-1.32	2.09	3.54	5.06	5.67	6.55	7.25	5.10	5.29	1.00	-2.75	-1.17	-3.27	-0.05	-0.21	-0.40	3.92	6.16	5.65	3.72	0.78	-1.02	-3.14	-4.22	-8.94	-7.53	-8.46	-9.39	-13.59	-24.32
20.00	-24.32	-11.41	-11.96	-8.16	-7.64	-6.78	-1.18	-1.14	1.62	3.08	5.07	6.34	6.41	5.34	4.62	4.68	0.50	-1.39	-1.17	-3.62	-0.87	0.44	0.54	1.40	3.72	4.01	2.54	-0.17	-1.36	-3.38	-5.97	-7.68	-6.83	-6.90	-10.84	-6.03	-13.16	-24.32
30.00	-24.32	-11.82	-15.65	-12.62	-6.67	-9.12	-2.43	-0.88	2.05	3.84	5.69	6.74	6.59	5.43	5.57	4.85	-0.15	-0.39	-1.17	-3.92	-2.67	-2.87	0.52	1.09	1.16	1.36	0.58	-0.73	-2.55	-7.62	-12.09	-7.56	-9.05	-11.06	-9.22	-13.21	-24.32
40.00	-24.32	-14.69	-13.49	-10.61	-8.52	-6.92	-0.75	-0.41	1.98	3.75	5.80	6.80	**6.88**	6.27	5.66	4.43	0.64	0.25	-1.17	-4.56	-4.37	-0.93	0.00	0.31	0.37	0.90	0.61	-1.12	-3.40	-7.92	-6.04	-8.44	-11.76	-10.15	-9.32	-13.54	-24.32
50.00	-24.32	-17.94	-14.01	-11.67	-6.19	-7.28	-1.54	0.09	2.55	4.07	5.62	5.71	5.28	5.10	4.16	3.65	1.20	0.50	-1.17	-5.13	-4.38	0.93	1.37	3.29	5.50	5.78	4.32	1.98	0.09	-2.60	-6.54	-7.95	-7.92	-12.27	-9.54	-13.35	-24.32
60.00	-24.32	-15.83	-14.28	-14.31	-9.14	-9.95	-3.32	-1.17	1.53	3.23	4.96	5.64	5.81	5.90	4.23	2.62	0.72	0.35	-1.17	-4.91	-2.38	0.37	0.29	3.22	5.42	6.01	4.81	1.73	-1.05	-2.34	-4.52	-6.92	-6.81	-8.92	-9.25	-13.86	-24.32
70.00	-24.32	-14.56	-10.34	-12.00	-6.80	-9.77	-3.41	-1.32	0.60	2.18	4.37	5.89	6.36	6.00	5.03	2.66	-0.99	-0.08	-1.17	-4.46	-0.50	1.02	0.75	3.12	4.17	4.56	3.74	1.13	-1.40	-3.40	-5.20	-6.45	-6.28	-9.96	-9.67	-16.11	-24.32
80.00	-24.32	-16.15	-9.43	-10.91	-7.55	-8.62	-6.15	-6.01	-3.19	-1.73	0.75	3.60	5.21	5.95	5.40	3.38	-1.33	-0.41	-1.17	-4.70	-2.27	3.28	3.79	4.21	3.58	2.68	0.87	-2.49	-5.93	-7.07	-6.01	-6.00	-6.27	-8.60	-6.71	-16.78	-24.32
90.00	-24.32	-19.59	-9.22	-9.19	-6.85	-6.53	-3.74	-2.44	-0.42	0.10	1.33	2.74	3.95	5.35	4.73	3.94	0.34	0.00	-1.17	-6.01	-2.47	3.79	3.07	3.05	3.00	2.90	1.78	-0.75	-2.70	-2.76	-2.92	-4.43	-6.97	-6.75	-6.51	-14.49	-24.32
100.00	-24.32	-18.55	-6.41	-7.49	-5.12	-6.28	-4.10	-4.01	-0.57	0.96	2.20	2.83	3.68	5.11	4.10	3.75	1.51	0.89	-1.17	-8.06	-6.99	2.10	0.55	2.10	3.24	3.09	2.19	0.62	-0.67	-4.21	-6.71	-9.75	-8.34	-12.12	-7.53	-13.94	-24.32
110.00	-24.32	-13.48	-9.94	-8.15	-5.97	-7.13	-3.47	-1.59	1.48	2.57	4.00	4.91	5.00	5.32	3.95	3.57	2.02	1.05	-1.17	-9.25	-4.74	2.25	1.59	3.69	5.95	5.42	3.80	0.75	-1.27	-3.92	-3.54	-8.62	-7.11	-12.02	-12.72	-15.27	-24.32
120.00	-24.32	-13.51	-12.76	-10.45	-6.57	-6.59	-2.81	-1.65	1.24	2.72	4.73	6.26	6.42	5.88	2.98	4.13	1.90	1.79	-1.17	-8.20	-1.65	2.67	2.65	4.42	5.54	5.42	5.86	2.84	2.05	-0.69	-2.87	-7.78	-9.24	-12.94	-11.60	-17.01	-24.32
130.00	-24.32	-14.04	-9.59	-10.90	-7.13	-7.77	-2.63	-1.08	1.64	2.44	3.75	5.64	4.33	5.42	3.59	4.90	1.32	1.67	-1.17	-8.48	-1.07	1.27	2.01	4.27	4.77	4.84	4.42	2.70	1.05	-0.15	-1.96	-7.05	-6.71	-12.06	-11.75	-16.30	-24.32
140.00	-24.32	-16.57	-8.34	-8.78	-6.89	-5.10	-2.56	-2.34	1.34	2.20	3.46	2.65	2.06	4.60	4.53	4.71	1.23	1.24	-1.17	-5.67	-2.07	-0.28	0.28	1.52	2.71	5.16	5.57	3.63	1.67	-0.49	-2.99	-8.42	-6.68	-9.93	-14.78	-15.24	-24.32
150.00	-24.32	-15.02	-9.24	-8.24	-5.83	-6.46	-6.06	-4.39	-0.62	0.50	2.46	3.25	3.51	4.59	3.86	2.27	1.95	0.55	-1.17	-5.72	-3.65	-0.31	1.19	2.25	4.75	6.63	6.27	4.25	2.60	-0.11	-1.69	-5.70	-8.66	-7.70	-14.39	-15.26	-24.32
160.00	-24.32	-13.52	-6.76	-7.54	-7.45	-6.54	-6.53	-3.38	-0.51	1.17	3.21	4.32	3.96	3.35	2.76	0.60	2.16	-0.37	-1.17	-5.94	-3.82	-1.24	1.01	4.17	5.25	6.09	5.20	2.91	1.17	-1.02	-2.97	-6.35	-6.19	-6.30	-6.98	-16.30	-24.32
170.00	-24.32	-13.61	-7.36	-5.13	-6.81	-7.49	-6.57	-3.57	-0.18	1.10	3.36	5.19	5.53	5.51	2.26	0.85	1.34	-1.41	-1.17	-5.49	-2.17	0.47	2.40	5.62	5.30	5.85	5.41	3.24	1.22	-1.66	-2.12	-5.68	-6.89	-7.34	-7.38	-16.95	-24.32

Ant.1~2 @7.125GHz

f=7125MHz E_total
Phi(deg) Theta(deg)

	-180.00	-170.00	-160.00	-150.00	-140.00	-130.00	-120.00	-110.00	-100.00	-90.00	-80.00	-70.00	-60.00	-50.00	-40.00	-30.00	-20.00	-10.00	0.00	10.00	20.00	30.00	40.00	50.00	60.00	70.00	80.00	90.00	100.00	110.00	120.00	130.00	140.00	150.00	160.00	170.00	180.00
0.00	-28.13	-14.00	-6.49	-6.70	-7.15	-7.39	-4.37	-3.64	-0.25	1.70	4.12	5.76	6.19	5.93	5.39	5.44	2.07	1.07	-1.56	-0.12	-0.42	1.95	1.30	3.53	4.98	4.73	3.31	0.59	-2.43	-5.64	-9.30	-10.33	-12.81	-5.66	-5.49	-16.90	-28.13
10.00	-28.13	-14.09	-7.04	-6.91	-7.76	-5.69	-3.72	-2.91	0.68	1.78	3.74	5.28	5.61	6.66	5.99	5.36	2.71	1.12	-1.56	-1.62	-1.32	2.77	2.07	2.66	5.77	6.27	4.76	1.60	0.11	-1.72	-3.93	-5.36	-6.72	-4.37	-4.49	-15.54	-28.13
20.00	-28.13	-15.06	-12.94	-9.91	-8.71	-7.36	-3.65	-2.45	1.03	2.04	3.67	4.12	4.51	5.38	3.91	3.08	2.79	1.19	-1.56	-3.85	-4.37	-0.64	0.70	3.07	4.82	4.86	3.28	0.56	-0.89	-4.50	-7.89	-6.67	-7.26	-7.44	-7.23	-14.86	-28.13
30.00	-28.13	-16.96	-12.11	-13.37	-7.44	-5.98	-3.14	-1.78	1.35	2.02	3.36	4.00	5.15	6.03	4.57	2.41	2.08	1.13	-1.56	-6.78	-9.39	-3.07	-3.34	1.60	5.00	5.30	3.92	1.76	0.03	-2.69	-5.13	-10.46	-9.09	-9.74	-13.06	-16.02	-28.13
40.00	-28.13	-17.81	-10.97	-13.27	-6.02	-8.66	-1.47	-0.22	1.89	3.25	4.95	5.39	5.42	5.92	4.52	2.06	1.40	0.90	-1.56	-5.40	-7.10	-2.30	-2.98	0.94	2.67	3.55	3.61	1.39	-0.35	-5.06	-7.52	-5.18	-8.83	-10.60	-10.20	-16.22	-28.13
50.00	-28.13	-15.61	-13.82	-9.32	-9.66	-5.20	-2.69	-1.15	2.37	3.88	5.21	5.57	6.03	6.50	5.27	2.95	0.76	0.96	-1.56	-4.37	-3.43	-6.14	-1.67	1.03	3.33	4.04	2.73	-0.04	-1.91	-1.86	-4.17	-10.11	-5.93	-7.86	-12.46	-12.84	-28.13
60.00	-28.13	-13.70	-13.16	-9.79	-9.40	-7.39	-2.57	-0.41	2.37	3.48	4.84	5.04	4.87	5.33	5.12	4.74	0.76	1.05	-1.56	-4.24	-2.95	0.10	2.02	3.66	4.74	5.23	4.34	1.88	-0.46	-3.71	-4.48	-9.32	-6.21	-9.13	-9.11	-11.35	-28.13
70.00	-28.13	-14.29	-8.16	-10.62	-13.31	-7.69	-2.15	-2.39	-0.52	1.43	3.53	4.23	4.36	4.81	5.12	5.63	1.43	1.01	-1.56	-5.36	-4.35	1.17	1.21	1.91	3.92	4.52	3.65	1.16	-1.59	-4.44	-4.78	-5.07	-4.29	-10.96	-7.13	-12.00	-28.13
80.00	-28.13	-17.71	-7.83	-11.95	-9.48	-11.61	-3.71	-2.77	-0.57	0.97	3.08	3.92	3.90	3.59	3.21	4.36	1.31	0.66	-1.56	-6.31	-4.28	3.53	3.58	3.44	3.64	3.45	1.90	-1.53	-4.13	-4.84	-5.82	-9.07	-7.10	-12.31	-8.41	-14.12	-28.13
90.00	-28.13	-18.85	-9.35	-9.25	-9.42	-11.61	-7.90	-6.98	-4.03	-1.72	1.46	2.91	3.07	3.78	2.41	2.47	0.00	-0.05	-1.56	-5.11	-5.20	1.19	1.06	1.67	1.30	1.07	0.23	-1.35	-3.12	-5.64	-3.78	-10.11	-7.98	-7.91	-6.32	-14.17	-28.13
100.00	-28.13	-17.68	-8.18	-9.36	-6.94	-9.07	-6.20	-4.90	-1.46	0.11	2.68	4.24	4.29	4.19	2.02	2.25	-2.33	-0.96	-1.56	-3.30	-7.12	-1.70	1.70	1.72	1.97	2.90	2.47	1.05	-0.10	-2.95	-7.67	-8.60	-8.33	-8.70	-6.84	-12.92	-28.13
110.00	-28.13	-17.15	-8.24	-9.94	-7.18	-7.68	-2.86	-2.92	0.22	1.88	3.74	5.00	5.17	5.75	3.20	2.87	-4.16	-1.76	-1.56	-2.02	-5.54	2.01	2.29	1.69	4.26	5.54	4.83	1.97	-1.03	-3.53	-4.28	-12.27	-8.67	-8.15	-15.15	-14.14	-28.13
120.00	-28.13	-16.40	-9.04	-7.25	-6.88	-8.79	-1.15	-1.80	1.17	3.08	4.89	5.31	4.35	5.10	3.44	3.01	-5.12	-1.83	-1.56	-1.46	-2.27	3.30	2.53	3.90	5.04	4.37	2.79	0.00	-0.71	-2.01	-3.54	-5.06	-6.61	-8.73	-9.60	-16.50	-28.13
130.00	-28.13	-16.51	-10.53	-10.31	-6.18	-7.04	-2.30	-2.01	-0.06	1.58	3.50	4.26	4.13	3.77	1.78	2.85	-5.04	-0.94	-1.56	-1.35	-0.19	1.91	0.93	3.51	3.90	2.92	2.05	0.46	-1.62	-4.06	-1.28	-6.52	-7.94	-11.58	-11.00	-15.79	-28.13
140.00	-28.13	-18.08	-6.73	-9.17	-7.03	-8.26	-3.31	-3.50	0.26	0.61	2.84	3.61	3.97	3.90	2.04	2.40	-2.94	0.09	-1.56	-1.11	1.44	0.46	1.87	3.64	3.50	4.97	5.25	2.90	1.46	-1.14	-2.62	-6.47	-10.43	-8.06	-12.74	-14.82	-28.13
150.00	-28.13	-17.07	-6.12	-6.58	-4.59	-6.64	-4.36	-2.77	0.66	1.17	3.68	4.16	3.49	3.06	2.76	3.09	1.26	3.70	0.92	3.70	-1.56	-0.42	2.15	1.56	3.20	3.30	3.46	6.22	6.76	4.48	1.62	-0.79	-2.15	-10.02	-7.97	-6.94	-10.30	-15.90	-28.13
160.00	-28.13	-16.65	-8.06	-6.61	-6.44	-8.27	-3.61	-2.19	0.10	0.75	2.69	3.52	3.42	2.92	2.33	2.05	0.60	0.96	-1.56	0.30	1.79	3.09	3.40	4.91	4.59	5.15	4.61	2.40	-0.35	-4.72	-4.25	-9.21	-6.36	-9.18	-11.34	-16.49	-28.13
170.00	-28.13	-19.18	-3.76	-5.78	-7.65	-8.47	-3.68	-2.64	-0.30	1.94	4.23	4.91	3.89	2.82	3.02	1.54	0.20	0.70	-1.56	0.90	1.59	4.25	3.98	5.71	6.68	**6.87**	5.16	2.23	-0.01	-3.01	-3.67	-8.99	-10.25	-8.36	-9.77	-14.99	-28.13

Uncorrelated Directional Gain for 6GHz (Ant. Position：6G Ant.1~2)

Frequency (MHz)	5925	6500	7125
Directional Gain	3.21	4.24	3.95

Ant.1~2 @5.925GHz

f=5925MHz E_total
Phi(deg) Theta(deg)

	-180.00	-170.00	-160.00	-150.00	-140.00	-130.00	-120.00	-110.00	-100.00	-90.00	-80.00	-70.00	-60.00	-50.00	-40.00	-30.00	-20.00	-10.00	0.00	10.00	20.00	30.00	40.00	50.00	60.00	70.00	80.00	90.00	100.00	110.00	120.00	130.00	140.00	150.00	160.00	170.00	180.00
0	-21.81	-16.48	-13.06	-8.89	-8.11	-6.41	-4.51	-3.40	-3.05	-2.66	-0.12	1.00	0.17	-1.25	-0.61	-1.59	-2.69	-4.14	0.40	-1.95	-0.91	-3.63	-2.17	-0.97	-0.69	-0.65	-1.95	-4.27	-6.74	-10.30	-11.78	-12.58	-11.19	-13.48	-16.07	-17.00	-21.81
10	-21.81	-11.21	-7.57	-7.18	-5.33	-2.90	-2.20	-1.99	-0.99	0.15	2.08	2.82	1.98	1.15	1.33	-0.07	-1.62	-3.18	0.40	-2.18	-1.29	-1.16	-0.96	2.43	2.74	2.00	0.16	-2.70	-4.56	-6.13	-6.59	-12.65	-11.54	-10.28	-12.05	-15.35	-21.81
20	-21.81	-11.16	-7.96	-7.76	-5.53	-3.93	-3.06	-3.06	-1.27	-0.03	1.60	2.68	**3.21**	2.99	0.89	-0.59	-1.49	-2.31	0.40	-2.54	-2.06	-1.95	-1.62	-6.10	1.29	1.99	-0.15	-2.42	-3.96	-7.96	-11.62	-9.07	-9.89	-14.67	-12.40	-14.34	-21.81
30	-21.81	-10.96	-8.46	-8.57	-5.93	-4.11	-3.24	-4.37	-1.99	-0.51	1.01	1.74	2.16	1.96	0.47	0.41	-1.57	-1.73	0.40	-2.89	-4.00	-2.82	-0.27	0.13	-1.05	-1.71	-2.94	-5.46	-6.69	-12.03	-8.75	-8.41	-11.90	-13.63	-14.30	-14.44	-21.81
40	-21.81	-10.71	-9.66	-8.09	-5.70	-4.27	-3.81	-3.99	-1.66	-0.77	0.45	1.06	1.41	1.13	0.07	-0.05	-1.24	-1.35	0.40	-3.89	-5.39	-3.45	-0.62	-0.08	-0.80	-1.38	-2.91	-5.65	-7.90	-8.68	-8.38	-10.93	-10.63	-12.77	-13.16	-14.96	-21.81
50	-21.81	-10.52	-8.08	-8.88	-5.77	-4.69	-4.93	-3.84	-2.09	-0.72	1.07	2.19	2.53	1.82	0.53	-0.75	-1.45	-1.03	0.40	-3.99	-4.19	-2.23	-2.00	-1.32	1.18	2.07	0.88	-1.54	-4.80	-8.06	-6.56	-7.23	-10.93	-17.09	-12.46	-15.08	-21.81
60	-21.81	-10.42	-7.17	-5.84	-5.66	-5.39	-5.54	-4.36	-2.77	-2.16	-0.62	0.81	1.41	0.88	-0.09	-0.63	-1.52	-1.57	-0.76	0.40	-3.05	-3.03	-2.54	-2.62	-0.79	1.67	2.17	0.61	-2.55	-5.12	-7.59	-11.01	-9.66	-7.83	-12.25	-11.81	-15.13	-21.81
70	-21.81	-10.43	-6.54	-6.39	-5.96	-6.04	-7.81	-5.22	-4.17	-2.75	-0.68	0.70	0.73	0.26	-1.09	-1.61	-0.68	-0.61	0.40	-3.12	-2.84	-5.04	-3.68	-1.65	-1.09	-0.79	-1.40	-3.11	-6.38	-9.88	-7.94	-7.03	-7.84	-13.01	-13.16	-16.26	-21.81
80	-21.81	-10.58	-6.36	-6.37	-6.82	-6.88	-6.13	-3.79	-2.12	-1.50	-0.57	-0.23	-0.07	0.98	-0.16	-0.71	0.24	-0.65	0.40	-3.34	-2.99	-5

Ant.1~2 @7.125GHz

f=7125MHz	E_total																																					
Phi (deg)	Theta(deg)																																					
0	-180.00	-170.00	-160.00	-150.00	-140.00	-130.00	-120.00	-110.00	-100.00	-90.00	-80.00	-70.00	-60.00	-50.00	-40.00	-30.00	-20.00	-10.00	0.00	10.00	20.00	30.00	40.00	50.00	60.00	70.00	80.00	90.00	100.00	110.00	120.00	130.00	140.00	150.00	160.00	170.00	180.00
0	-31.05	-16.40	-9.50	-9.55	-9.67	-9.96	-7.20	-6.60	-3.14	-1.27	1.11	2.89	3.71	3.19	2.55	2.93	-0.69	-1.69	-4.43	-3.04	-3.32	-0.33	0.14	1.70	2.99	2.31	0.73	-2.00	-5.00	-8.41	-11.95	-13.17	-15.72	-8.48	-6.47	-21.83	-31.05
10	-31.05	-11.21	-7.57	-7.10	-5.33	-2.90	-2.20	-5.76	-2.11	-1.22	0.76	2.39	3.00	3.71	3.06	2.76	-0.09	-1.54	-4.43	-4.41	-4.22	-0.15	-0.18	1.15	3.14	3.44	2.01	-0.76	-2.52	-4.57	-6.77	-11.25	-11.66	-7.31	-6.99	-18.34	-31.05
20	-31.05	-11.16	-7.96	-7.76	-5.53	-3.93	-3.86	-5.46	-1.98	-0.96	0.69	1.11	1.59	2.38	0.93	0.33	-0.09	-1.60	-4.43	-6.36	-7.28	-3.49	-2.27	0.18	2.24	2.36	0.81	-1.59	-3.62	-7.49	-10.82	-9.62	-10.25	-10.43	-10.01	-17.65	-31.05
30	-31.05	-10.96	-8.46	-8.57	-5.93	-4.11	-3.24	-4.77	-1.66	-0.96	0.40	1.01	2.14	3.06	1.74	-0.59	-0.82	-1.82	-4.43	-6.15	-12.13	-6.50	-6.04	-1.12	2.03	2.30	0.95	-1.10	-2.91	-5.68	-8.09	-12.72	-11.54	-12.29	-16.04	-18.96	-31.05
40	-31.05	-10.71	-8.66	-8.09	-5.70	-4.27	-3.91	-3.16	-0.93	0.33	1.98	2.38	2.41	2.92	1.54	-0.93	-1.60	-2.03	-4.43	-8.26	-9.99	-5.01	-5.53	-1.19	-0.09	0.55	0.60	-1.62	-3.29	-7.70	-10.52	-6.15	-11.75	-13.37	-12.96	-18.21	-31.05
50	-31.05	-10.52	-8.08	-6.80	-5.77	-4.69	-4.93	-4.11	-0.53	1.06	2.35	2.72	3.10	3.49	2.27	-0.16	-2.22	-2.05	-4.43	-7.37	-6.34	-3.03	-4.67	-1.79	0.99	1.16	-0.27	-2.90	-4.66	-4.67	-7.04	-13.06	-8.93	-10.85	-15.43	-15.63	-31.05
60	-31.05	-10.42	-7.17	-5.84	-5.66	-5.39	-6.54	-3.37	-0.64	0.55	2.00	2.39	2.26	2.55	2.38	1.62	-2.13	-1.95	-4.43	-7.23	-5.95	-2.82	-0.86	0.73	1.78	2.27	1.35	-1.10	-3.41	-6.71	-7.40	-11.90	-9.17	-11.57	-11.95	-14.32	-31.05
70	-31.05	-10.43	-6.54	-5.39	-5.96	-6.04	-7.81	-5.22	-3.53	-1.56	0.56	1.37	1.67	2.36	2.29	2.66	-1.48	-1.97	-4.43	-8.26	-7.36	-1.81	-1.78	-0.95	1.22	1.81	0.89	-1.64	-4.40	-7.45	-6.86	-7.73	-7.29	-13.80	-10.14	-15.00	-31.05
80	-31.05	-10.59	-6.36	-5.37	-6.82	-6.88	-6.13	-5.76	-3.57	-2.03	0.07	0.91	0.92	1.19	0.30	1.40	-1.58	-2.33	-4.43	-8.21	-6.96	0.76	0.93	0.93	1.35	0.97	-0.85	-4.50	-6.90	-6.99	-6.59	-11.73	-10.11	-14.12	-11.35	-17.03	-31.05
90	-31.05	-10.84	-6.62	-6.73	-8.86	-7.70	-7.52	-9.40	-6.10	-4.46	-1.52	-0.10	0.06	1.02	-0.59	-0.46	-2.86	-3.06	-4.43	-8.11	-7.60	-1.57	-1.81	-0.99	-1.35	-1.87	-2.77	-4.35	-5.53	-8.07	-6.78	-13.11	-10.66	-10.84	-9.20	-16.95	-31.05
100	-31.05	-11.18	-7.34	-6.41	-9.05	-8.28	-6.72	-7.90	-4.47	-2.85	-0.26	1.27	1.28	1.58	-0.84	-0.54	-5.09	-3.92	-4.43	-6.22	-10.12	-3.95	-0.45	0.14	-0.88	-0.09	-0.33	-1.95	-3.02	-5.85	-6.97	-11.37	-11.11	-11.64	-9.83	-15.91	-31.05
110	-31.05	-11.49	-8.49	-7.43	-9.17	-8.36	-6.67	-5.93	-2.72	-1.09	0.80	2.19	2.46	3.19	0.68	0.41	-5.72	-4.44	-4.43	-4.99	-8.29	-0.59	-0.47	-1.88	1.32	2.70	1.87	-1.04	-3.89	-6.45	-6.52	-14.68	-11.67	-11.15	-18.16	-17.15	-31.05
120	-31.05	-11.70	-9.89	-8.60	-8.49	-7.52	-7.26	-4.72	-1.62	0.15	1.94	2.44	1.58	2.49	0.89	0.77	-6.93	-4.24	-4.43	-4.47	-5.14	0.31	-0.46	0.96	2.05	1.37	-0.11	-2.75	-3.53	-5.07	-6.35	-9.05	-9.61	-11.42	-12.10	-19.43	-31.05
130	-31.05	-11.82	-11.20	-9.61	-7.96	-6.14	-5.90	-4.98	-2.84	-1.36	0.56	1.34	1.16	1.25	-0.20	0.83	-6.23	-3.52	-4.43	-4.27	-3.15	-1.10	-2.07	0.55	0.89	0.02	-0.54	-2.26	-4.44	-7.08	-4.29	-9.41	-10.94	-14.41	-13.99	-18.54	-31.05
140	-31.05	-11.96	-12.10	-10.67	-7.90	-6.07	-5.39	-6.23	-2.54	-2.12	0.06	0.80	1.01	1.19	-0.07	0.56	-4.95	-2.73	-4.43	-3.93	-1.56	-2.51	-1.07	0.77	0.54	1.97	2.24	-0.11	-1.54	-4.10	-5.61	-9.46	-12.98	-11.07	-25.61	-17.80	-31.05
150	-31.05	-12.30	-12.36	-13.57	-8.51	-6.32	-5.64	-6.78	-2.30	-1.60	0.83	1.24	0.63	0.75	0.04	-0.05	-3.28	-2.19	-4.43	-3.33	-0.86	-1.19	0.29	0.44	0.46	3.27	3.84	1.56	-1.35	-3.74	-5.15	-12.87	-10.98	-11.81	-13.24	-18.82	-31.05
160	-31.05	-12.92	-11.94	-16.03	-11.10	-7.57	-5.93	-5.92	-2.39	-1.62	0.34	1.04	0.93	0.25	0.06	0.26	-2.40	-2.01	-4.43	-2.63	-1.18	1.07	1.12	1.99	1.62	2.17	1.60	-0.41	-3.34	-7.67	-7.20	-11.03	-11.34	-11.76	-13.90	-19.16	-31.05
170	-31.05	-13.75	-11.22	-12.81	-9.86	-9.00	-7.12	-5.43	-2.54	-0.49	1.68	2.54	1.89	0.37	0.77	-0.11	-2.80	-2.27	-4.43	-2.05	-1.27	2.06	1.79	3.08	3.83	3.95	2.19	-0.76	-3.02	-6.00	-6.67	-11.96	-13.24	-10.84	-12.54	-17.65	-31.05

9. Radiation Pattern

Ant. Position：2.4G Ant.1

XY_Ant.1@2.4G

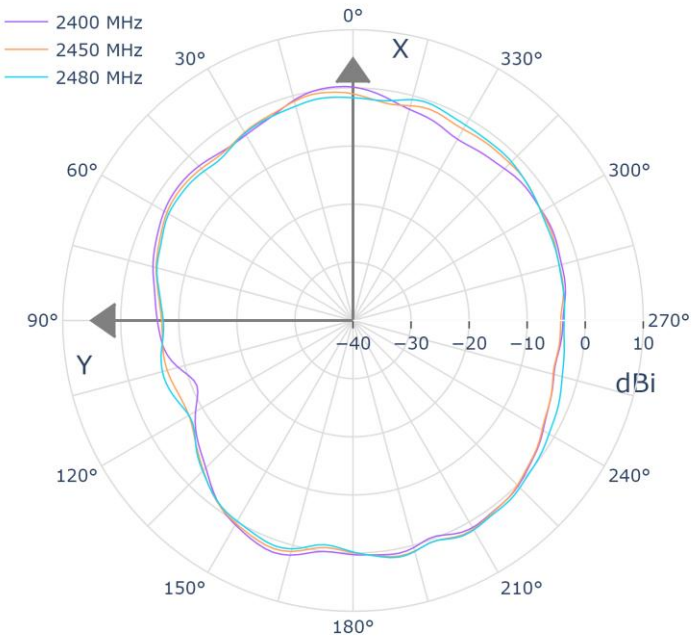

XZ_Ant.1@2.4G

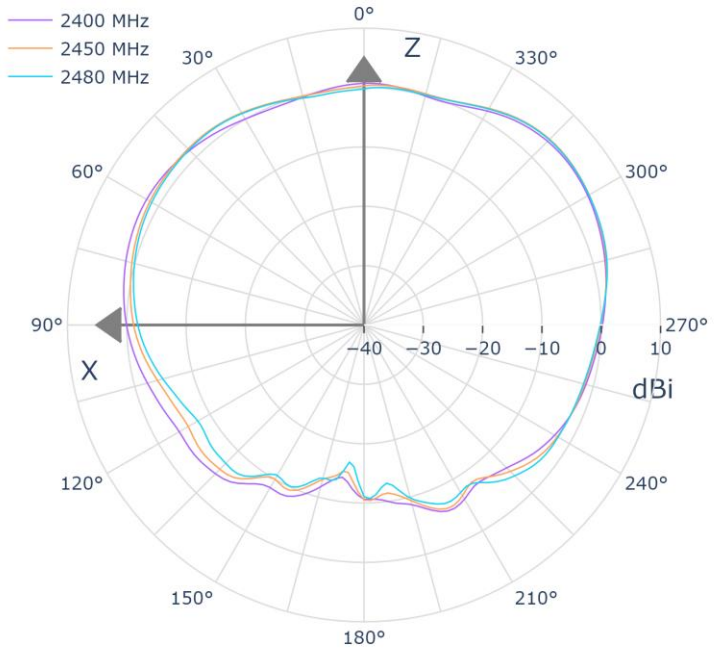

YZ_Ant.1@2.4G

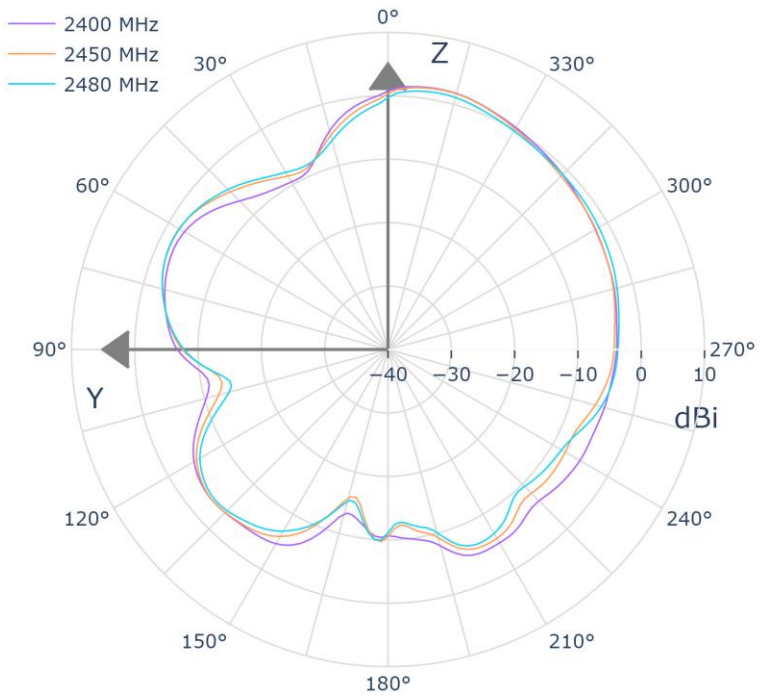

Ant. Position：2.4G Ant.2

XY_Ant.2@2.4G

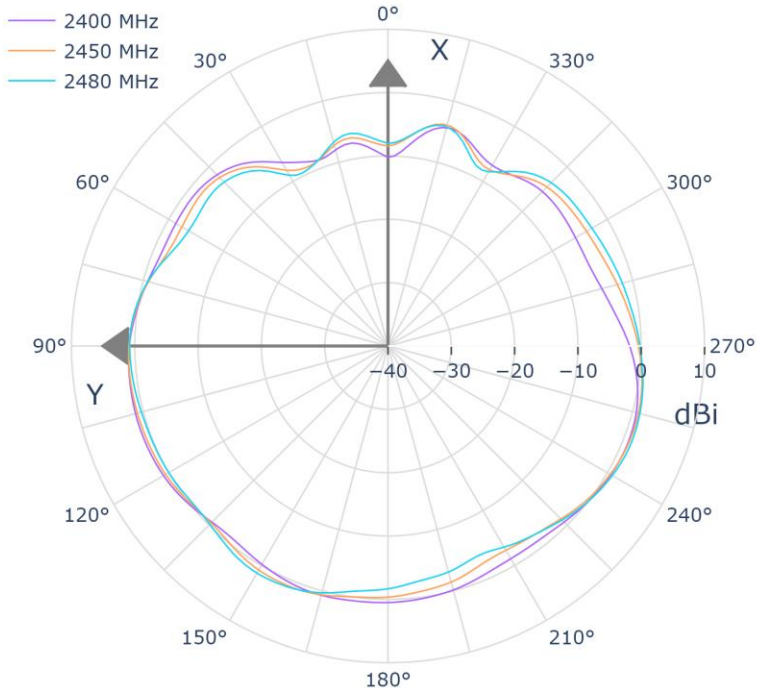

XZ_Ant.2@2.4G

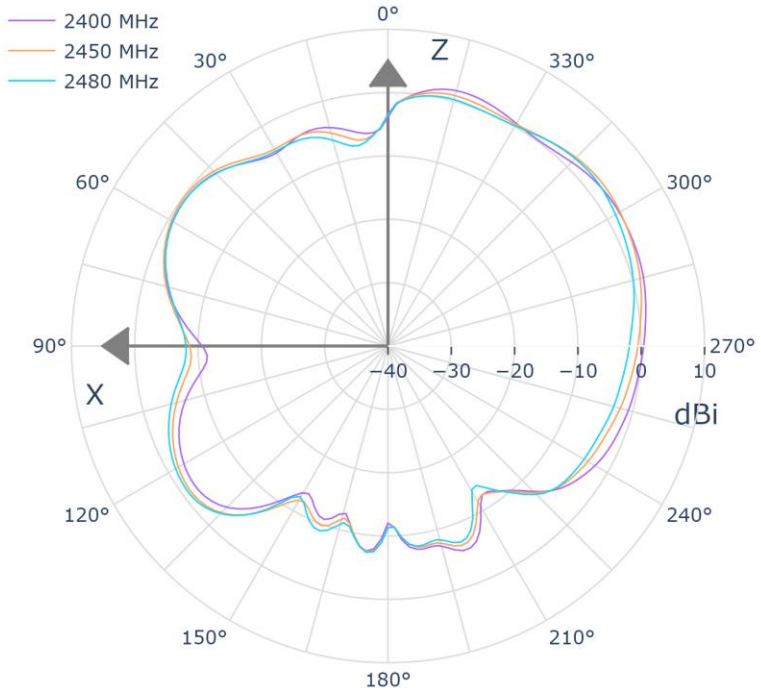

YZ_Ant.2@2.4G

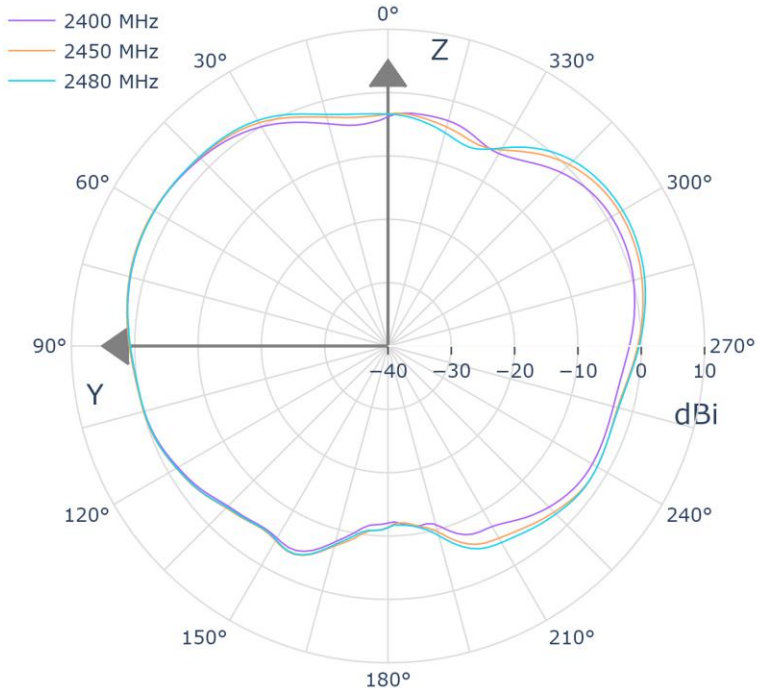

Ant. Position：5G Ant.3

XY_Ant.3@5G

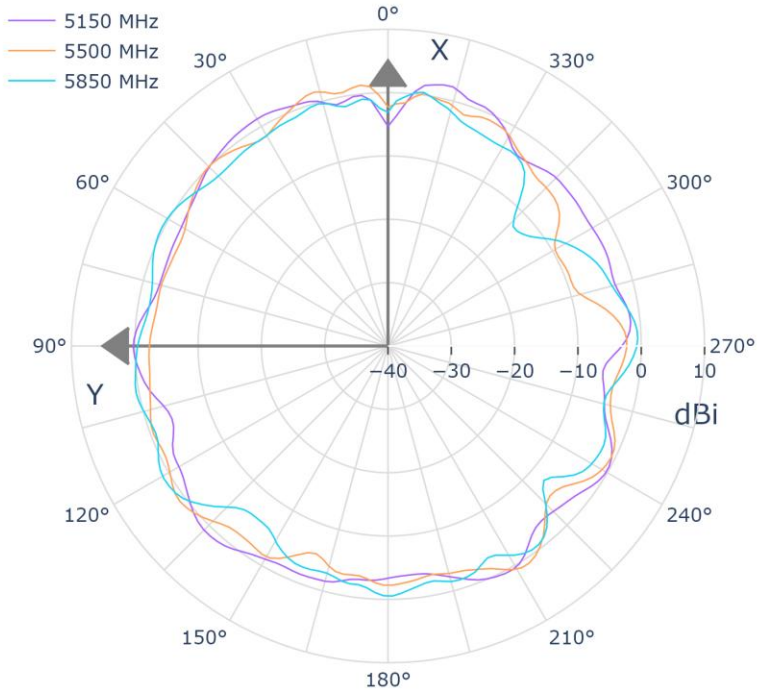

XZ_Ant.3@5G

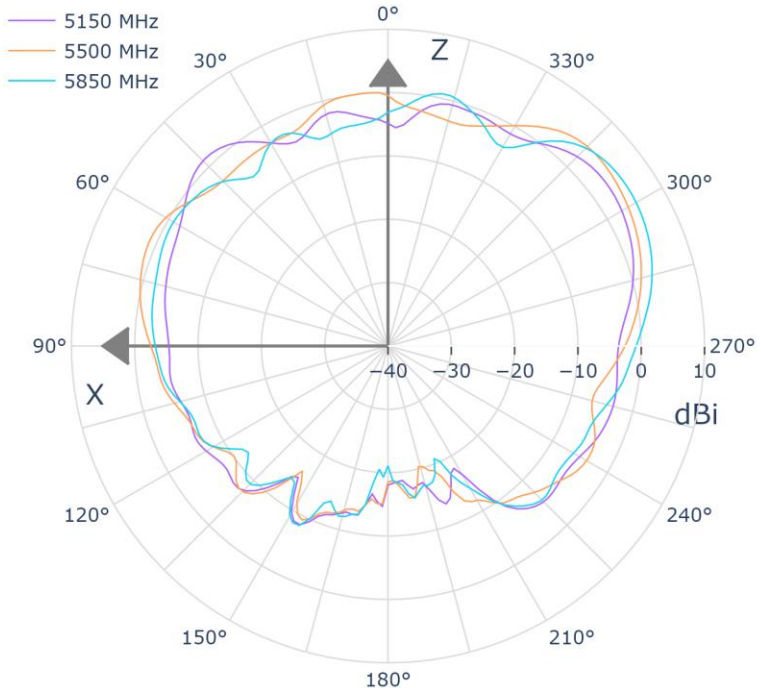

YZ_Ant.3@5G

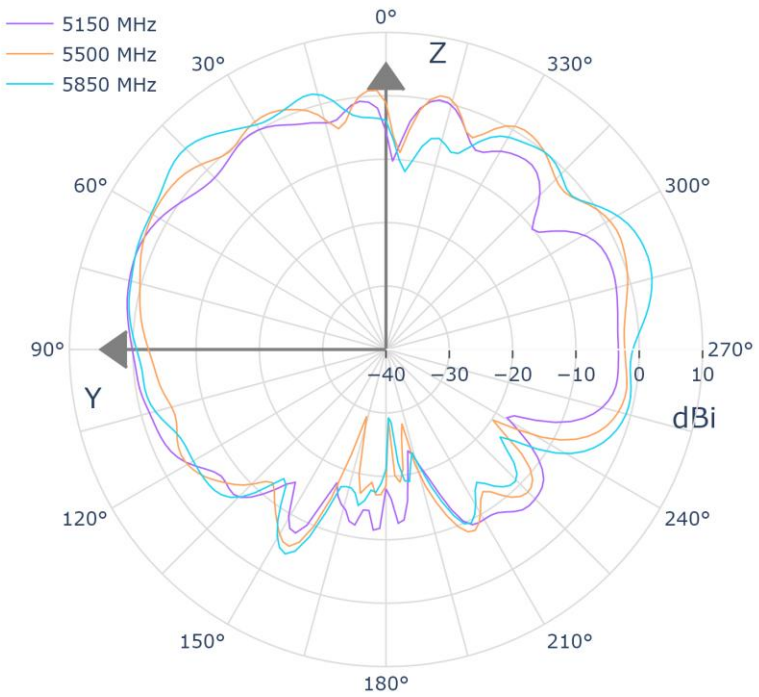

Ant. Position：5G Ant.4

XY_Ant.4@5G

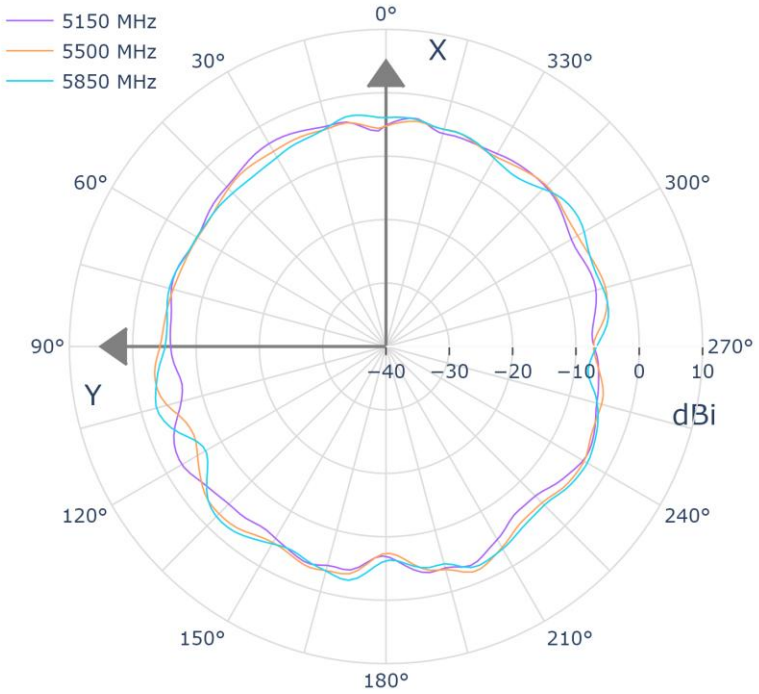

XZ_Ant.4@5G

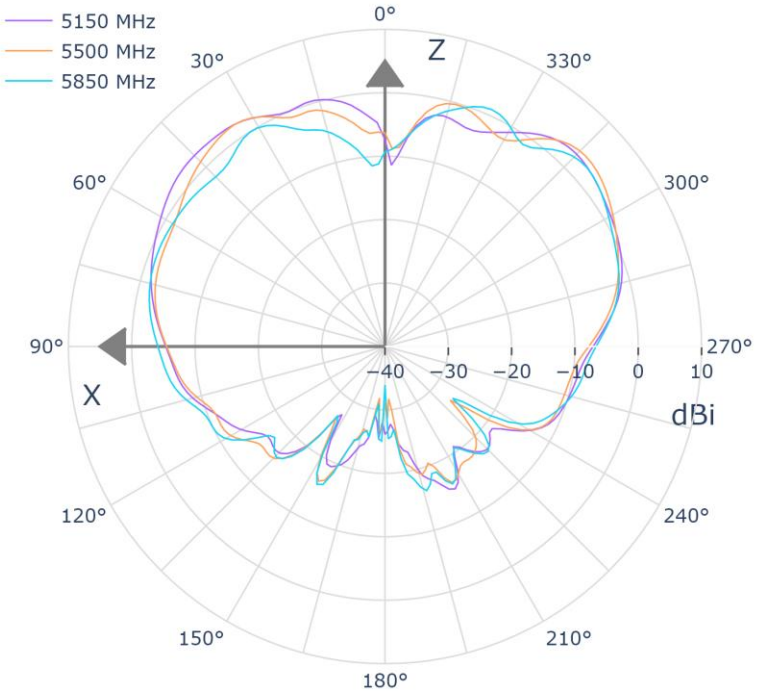

YZ_Ant.4@5G

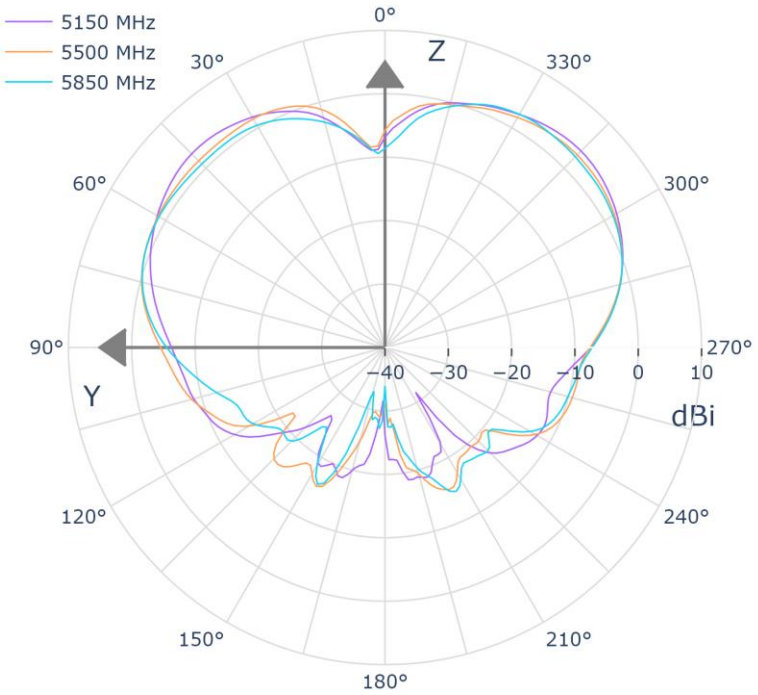

Ant. Position：6G Ant.1

XY_Ant.1@6G

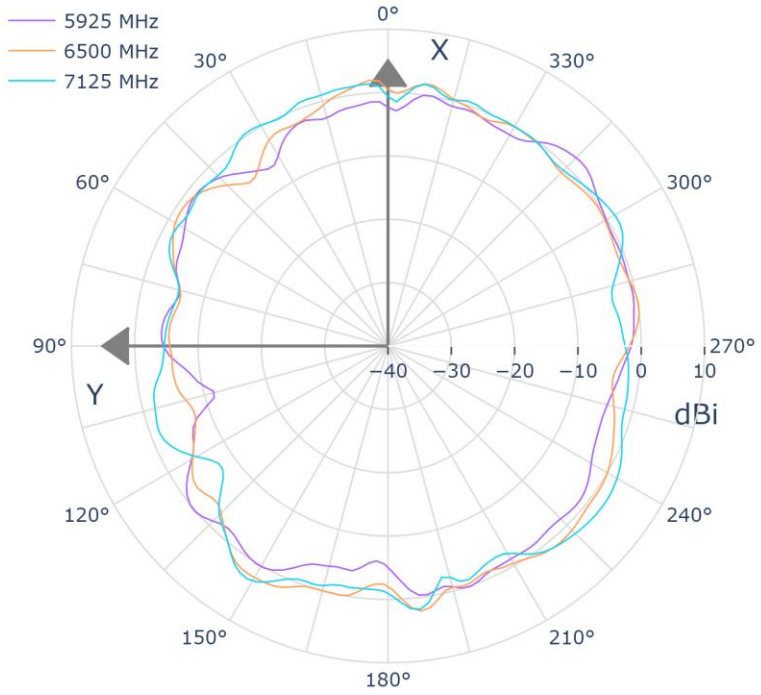

XZ_Ant.1@6G

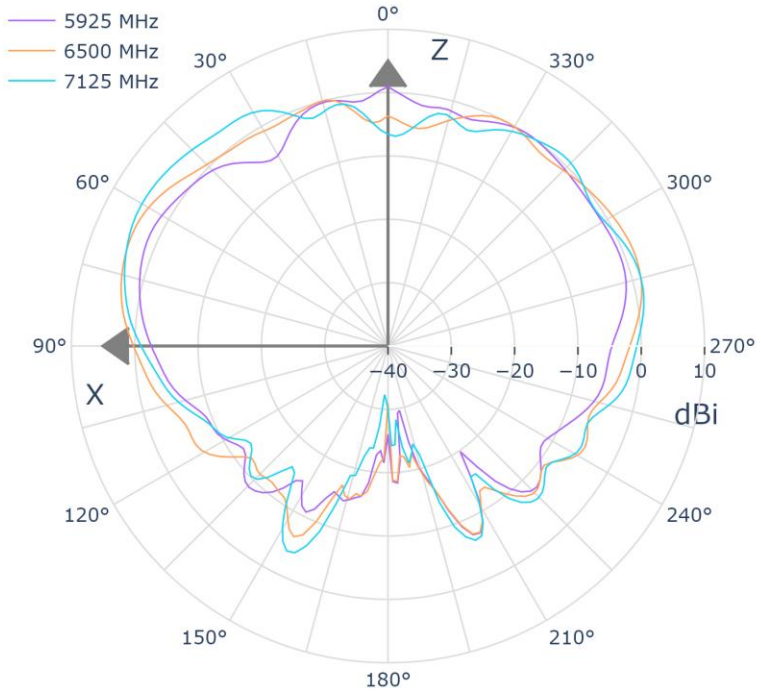

YZ_Ant.1@6G

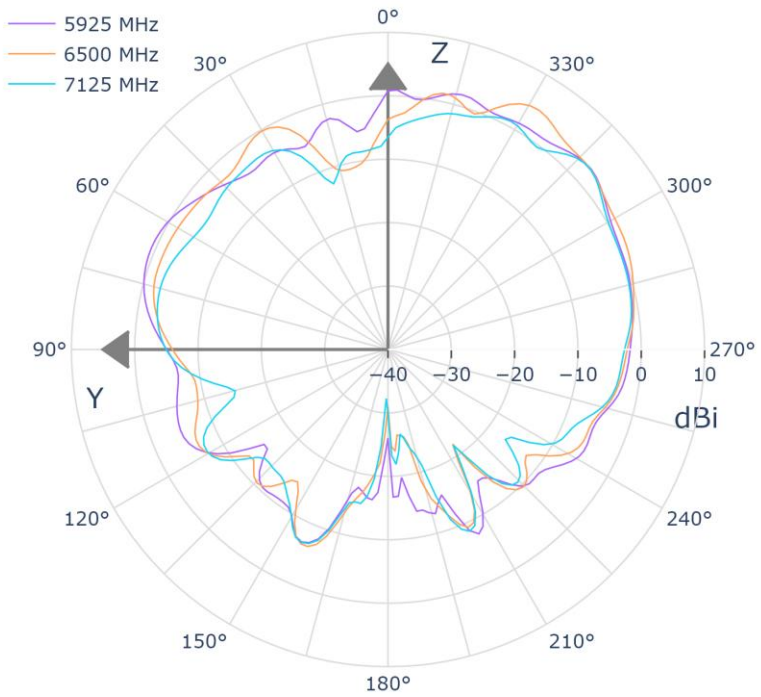

Ant. Position：6G Ant.2

XY_Ant.2@6G

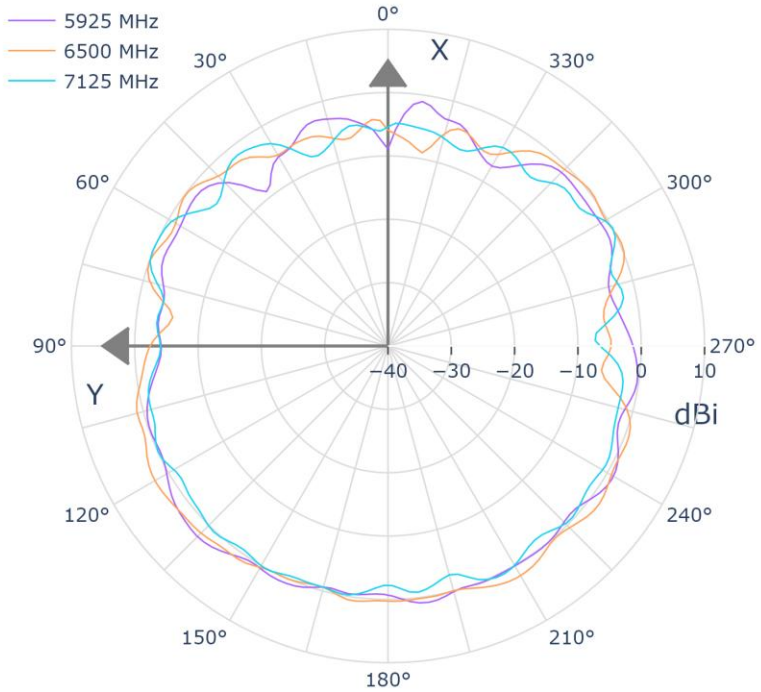

XZ_Ant.2@6G

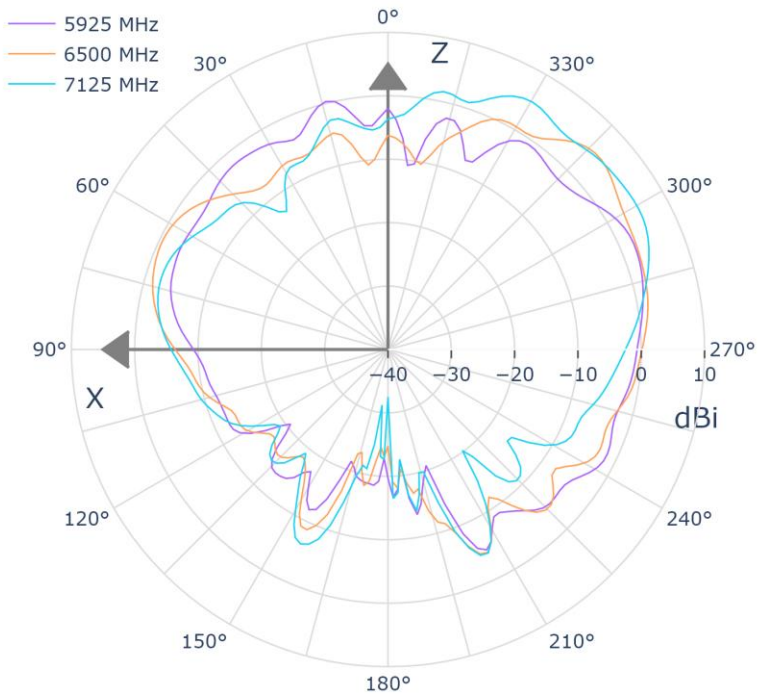

YZ_Ant.2@6G

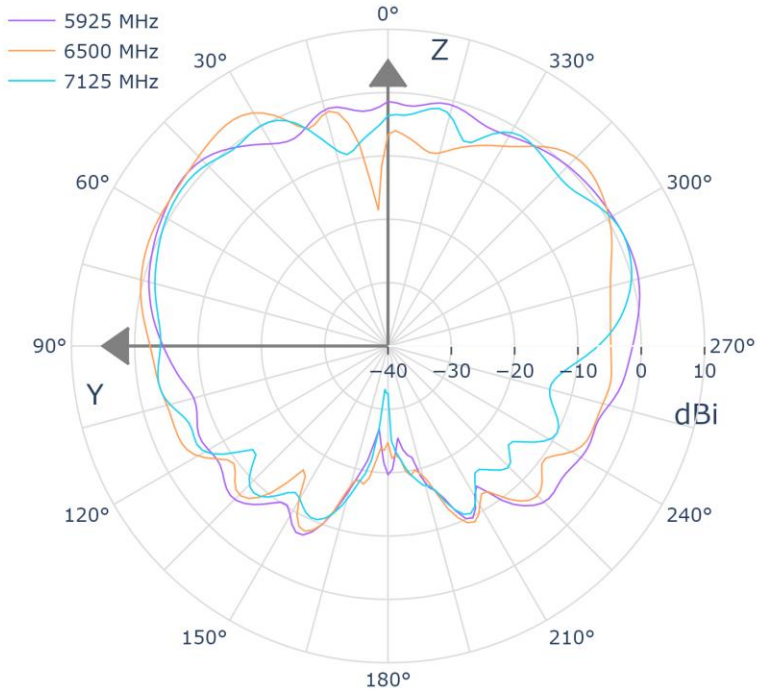

XZ_Ant.2@6G

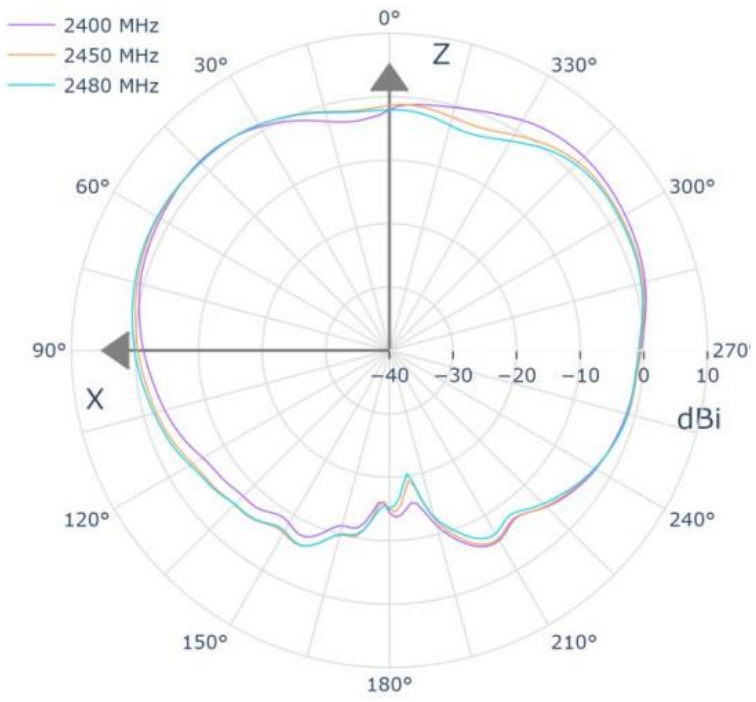
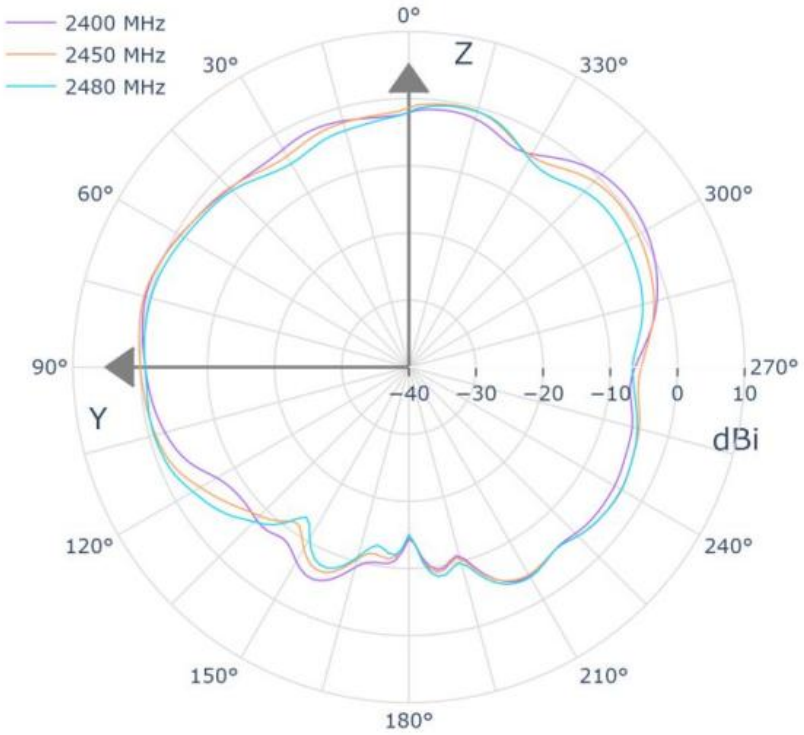
YZ_Ant.2@6G