PCD

P60

Guía de Configuración Rápida

Thank you for purchasing this innovative PCD device. The specifications in this document are subject to change without notice. To download the full user's manual visit us at: www.pcdlatam.com

PCD and the PCD logo are registered trademarks of PCD,LLC. Other trademark are the property of their respective owners.

Charge for 12 hours before using.

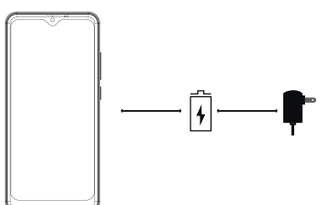

1

Install SIM card / Memory card.

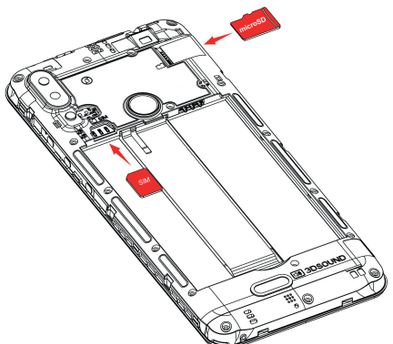

2

Get to know your new PCD device

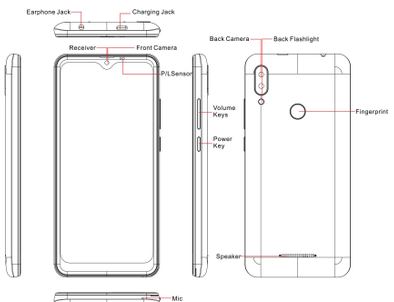

3

Connect your new PCD device to the computer using a USB cable.

Copy files from your computer to your new device.

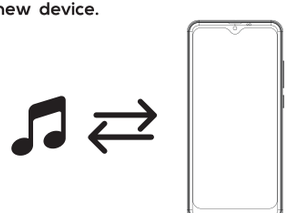

4

4G LTE

P60

PANTALLA	6.088" / HD / WATER DROP
CÁMARA	PRIMARIA: 8MP+2MP CON FLASH SECUNDARIA: 5MP
MEMORIA	32GB ROM | 2GB RAM
SISTEMA OPERATIVO	ANDROID™ 11 (Go edition)
PROCESADOR	CUATRO NÚCLEOS 1.3 GHz

PCD

PCD es una marca registrada de PCD, LLC en los Estados Unidos, América latina y otros países. Igualmente, el logo de PCD así como sus etiquetas aquí contenidas son marcas registradas. Todos los derechos reservados.

7651 Southland Blvd. Orlando, FL 32809. USA
www.pcdlatam.com

Android es una marca de Google LLC.

This device complies with Part 15 of the FCC Rules. Operation is subject to the following two conditions: (1) this device may not cause harmful interference, and (2) this device must accept any interference received, including interference that may cause undesired operation.

Changes or modifications to this unit not expressly approved by the party responsible for compliance could void the user's authority to operate the equipment.

NOTE: This equipment has been tested and found to comply with the limits for a Class B digital device, pursuant to Part 15 of the FCC Rules. These limits are designed to provide reasonable protection against harmful interference in a residential installation. This equipment generates, uses and can radiate radio frequency energy and, if not installed and used in accordance with the instructions, may cause harmful interference to radio communications. However, there is no guarantee that interference will not occur in a particular installation. If this equipment does cause harmful interference to radio or television reception, which can be determined by turning the equipment off and on, the user is encouraged to try to correct the interference by one or more of the following measures:
-- Reorient or relocate the receiving antenna.
-- Increase the separation between the equipment and receiver.
-- Connect the equipment into an outlet on a circuit different from that to which the receiver is connected.
-- Consult the dealer or an experienced radio/TV technician for help.

This device and its antenna(s) must not be co-located or operation in conjunction with any other antenna or transmitter.

Specific Absorption Rate (SAR) information:

This mobile phone meets the government's requirements for exposure to radio waves. The guidelines are based on standards that were developed by independent scientific organizations through periodic and thorough evaluation of scientific studies.
The standards include a substantial safety margin designed to assure the safety of all persons regardless of age or health. FCC RF Exposure Information and Statement the SAR limit of USA (FCC) is 1.6 W/kg averaged over one gram of tissue. Device types: the mobile phone has also been tested against this SAR limit. This device was tested for typical body-worn operations with the back of the phone kept 10mm from the body. To maintain compliance with FCC RF exposure requirements, use accessories that maintain an 10mm separation distance between the user's body and the back of the phone. The use of belt clips, holsters and similar accessories should not contain metallic components in its assembly. The use of accessories that do not satisfy these requirements may not comply with FCC RF exposure requirements, and should be avoided.