FCC SAR Test Report

Client Name	:	Wuhan Tianyu Information Industry Co., Ltd.
Address	:	HUST Industry Park, East-Lake Development Zone, Wuhan 430223, Hubei, China
Product Name	:	Smart POS Terminal
FCC ID	:	2ALKI-P30
Date	:	Nov. 18, 2021

Shenzhen Anbotek Compliance Laboratory Limited

Contents

1. Statement of Compliance 6
2. General Information 7
2.1. Client Information 7
2.2. Testing Laboratory Information 7
2.3. Description of EquipmentUnder Test (EUT) 8
2.4. Device Category and SAR Limits 9
2.5. Applied Standard 9
2.6. Environment of Test Site 9
2.7. Test Configuration 9
3. Specific Absorption Rate (SAR) 10
3.1. Introduction 10
3.2. SAR Definition 10
4. SAR Measurement System 11
4.1. E-Field Probe 12
4.2. Data Acquisition Electronics (DAE) 12
4.3. Robot 13
4.4. Measurement Server 13
4.5. Phantom 14
4.6. Device Holder 15
4.7. Data Storage and Evaluation 16
5. Test Equipment List 18
6. Tissue Simulating Liquids 18
7. System Verification Procedures 21
8. EUT Testing Position 23
8.1. Body Worn Position 23
9. Measurement Procedures 24
9.1. Spatial Peak SAR Evaluation 24
9.2. Power Reference Measurement 25
9.3. Area Scan Procedures 25
9.4. Zoom Scan Procedures 26
9.5. Volume Scan Procedures 27
9.6. Power Drift Monitoring 27
10. Conducted Power 28
11. Antenna Location 31
12. SAR Test Results Summary 33
12.1. Body–worn and Hotspot SAR Results 34
13. Simultaneous Transmission Analysis 35
14. Measurement Uncertainty 36
Appendix A. EUT Photos and Test Setup Photos 37

Appendix B. Plots of SAR System Check 38
Appendix C. Plots of SAR Test Data 39
Appendix D. DASY System Calibration Certificate..... 40

TEST REPORT

Applicant	:	Wuhan Tianyu Information Industry Co., Ltd.
Manufacturer	:	Shenzhen Eternity Technology Co.,Ltd
Product Name	:	Smart POS Terminal
Model No.	:	P30
Trade Mark	:	N/A
Rating(s)	:	DC5V From TypeC or DC7.4V From Battery

Test Standard(s) : IEEE 1528-2013;
ANSI/IEEE C95.1:2005; FCC 47 CFR Part 2 (2.1093);

The device described above is tested by Shenzhen Anbotek Compliance Laboratory Limited to determine the maximum emission levels emanating from the device and the severe levels of the device can endure and its performance criterion. The measurement results are contained in this test report and Shenzhen Anbotek Compliance Laboratory Limited is assumed full of responsibility for the accuracy and completeness of these measurements. Also, this report shows that the EUT (Equipment Under Test) is technically compliant with theIEEE 1528-2013, FCC 47 CFR Part 2 (2.1093), ANSI/IEEE C95.1:2005requirements.

This report applies to above tested sample only and shall not be reproduced in part without written approval of Shenzhen Anbotek Compliance Laboratory Limited.

Date of Test Nov. 05, 2021~ Nov. 18, 2021

Prepared By

(Engineer / Kingkong Jin)

Reviewer

(Supervisor / Bibo Zhang)

Approved & Authorized Signer

(Manager / Tom Chen)

Version

Version No.	Date	Description
01	Nov. 18, 2021	Original

1. Statement of Compliance

<Highest SAR Summary>

This device is in compliance with Specific Absorption Rate (SAR) for general population/uncontrolled exposure limits (1.6 W/kg) specified in FCC 47 CFR part 2 (2.1093) and ANSI/IEEE C95.1-2005, and had been tested in accordance with the measurement methods and procedures specified in IEEE 1528-2013
The maximum results of Specific Absorption Rate (SAR) found during testing are as follows.

FrequencyBand	Highest Reported 1g-SAR(W/Kg)	SAR Test Limit (W/Kg)
	Body (5mm)	
LTE Band 41	0.768	1.6
NFC	0.001	
1-g Sum SAR	0.769	
Test Result	PASS	

This device is in compliance with Specific Absorption Rate (SAR) for general population/uncontrolled exposure limits (1.6 W/kg) specified in FCC 47 CFR part 2 (2.1093) and ANSI/IEEE C95.1-2005, and had been tested in accordance with the measurement methods and procedures specified in IEEE 1528-2013

2. General Information

2.1. Client Information

Applicant	:	Wuhan Tianyu Information Industry Co., Ltd.
Address	:	HUST Industry Park, East-Lake Development Zone, Wuhan 430223, Hubei, China
Manufacturer	:	Shenzhen Eternity Technology Co.,Ltd
Address	:	1F,2F,4F Building A2, Yingzhan Industrial Zone, Longtian Community, Longtian Road, Pingshan District, Shenzhen, Guangdong Province, P.R. China

2.2. Testing Laboratory Information

Test Site:	:	Shenzhen Anbotek Compliance Laboratory Limited
Address:	:	1/F, Building D, Sogood Science and Technology Park, Sanwei community, Hangcheng Street, Bao'an District, Shenzhen, Guangdong, China.518102

2.3. Description of EquipmentUnder Test (EUT)

Product Name	:	Smart POS Terminal
Model No.	:	P30
Trade Mark	:	N/A
Test Power Supply	:	DC5V From TypeC or DC7.4V From Battery
Test Sample No.	:	1-2-1(Normal Sample), 1-2-2(Engineering Sample)
Tx Frequency	:	LTE Band 41:2555~2655 MHz NFC:'13.56MHz
Type of Modulation	:	LTE: QPSK,16QAM NFC:ASK
Category of device	:	Portable device
Remark: The above DUT's information was declared by manufacturer. Please refer to the specifications or user's manual for more detailed description.		

2.4. Device Category and SAR Limits

This device belongs to portable device category because its radiating structure is allowed to be used within 20 centimeters of the body of the user. Limit for General Population/Uncontrolled exposure should be applied for this device, it is 1.6 W/kg as averaged over any 1 gram of tissue.

2.5. Applied Standard

The Specific Absorption Rate (SAR) testing specification, method, and procedure for this device is in accordance with the following standards:

- FCC 47 CFR Part 2 (2.1093:2013)
- ANSI/IEEE C95.1:2005
- IEEE Std 1528:2013
- KDB 865664 D01 SAR Measurement 100 MHz to 6 GHz v01r04
- KDB 865664 D02 RF Exposure Reporting v01r02
- KDB 447498 D01 General RF Exposure Guidance v06
- KDB248227 D01 802 11 Wi-Fi SAR v02r02
- KDB941225 D01 3G SAR Procedures v03r01
- KDB 941225 D05 SAR for LTE Devicesv02r05
- KDB 941225 D06 Hotspot SARv02r01
- KDB648474 D04 Handset SAR v01r03

2.6. Environment of Test Site

Items	Required	Actual
Temperature (℃)	18-25	22~23
Humidity (%RH)	30-70	55~65

2.7. Test Configuration

The device was controlled by using a base station emulator. Communication between the device and the emulator was established by air link. The distance between the EUT and the antenna of the emulator is larger than 50 cm and the output power radiated from the emulator antenna is at least 30 dB smaller than the output power of EUT. The EUT was set from the emulator to radiate maximum output power during all tests. For WLAN SAR testing, WLAN engineering testing software installed on the EUT can provide continuous transmitting RF signal.

3. Specific Absorption Rate (SAR)

3.1. Introduction

SAR is related to the rate at which energy is absorbed per unit mass in an object exposed to a radio field. The SAR distribution in a biological body is complicated and is usually carried out by experimental techniques or numerical modeling. The standard recommends limits for two tiers of groups, occupational/controlled and general population/uncontrolled, based on a person's awareness and ability to exercise control over his or her exposure. In general, occupational/controlled exposure limits are higher than the limits for general population/uncontrolled.

3.2. SAR Definition

The SAR definition is the time derivative (rate) of the incremental energy (dW) absorbed by (dissipated in) an incremental mass (dm) contained in a volume element (dv) of a given density (ρ).The equation description is as below:

$$\mathbf{SAR} = \frac{\mathbf{d}}{\mathbf{dt}}\left(\frac{\mathbf{dW}}{\mathbf{dm}}\right) = \frac{\mathbf{d}}{\mathbf{dt}}\left(\frac{\mathbf{dW}}{\boldsymbol{\rho}\mathbf{dv}}\right)$$

SAR is expressed in units of Watts per kilogram (W/kg)

SAR measurement can be either related to the temperature elevation in tissue by

$$\mathbf{SAR} = \mathbf{C}\left(\frac{\boldsymbol{\delta}\mathbf{T}}{\boldsymbol{\delta}\mathbf{t}}\right)$$

Where: C is the specific head capacity, δT is the temperature rise and δtisthe exposure duration, or related to the electrical field in the tissue by

$$\mathbf{SAR} = \frac{\boldsymbol{\sigma}|\mathbf{E}|^2}{\boldsymbol{\rho}}$$

Where:σ is the conductivity of the tissue, ρ is the mass density of the tissue and E is the RMS electrical field strength.

However for evaluating SAR of low power transmitter, electrical field measurement is typically applied.

4. SAR Measurement System

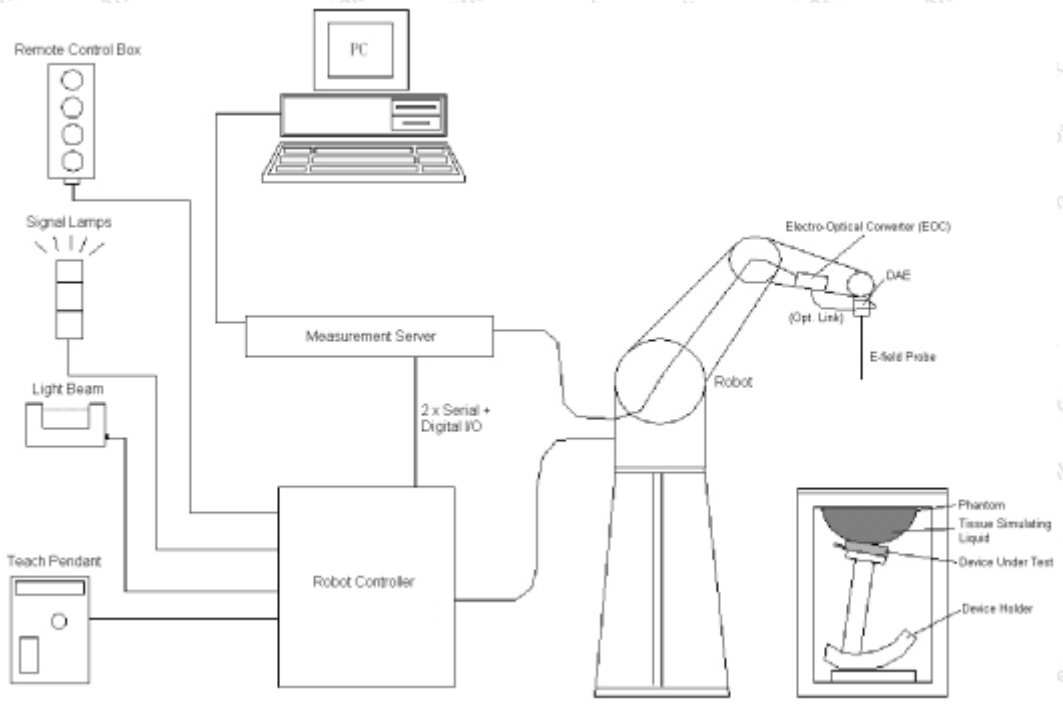

DASY System Configurations

The DASYsystem for performance compliance tests is illustrated above graphically. This system consists of the following items:

- A standard high precision 6-axis robot with controller, a teach pendant and software
- A data acquisition electronic (DAE) attached to the robot arm extension
- A dosimetric probe equipped with an optical surface detector system
- The electro-optical converter (EOC) performs the conversion between optical and electrical signals
- A measurement server performs the time critical tasks such as signal filtering, control of the robot operation and fast movement interrupts.
- A probe alignment unit which improves the accuracy of the probe positioning
- A computer operating Windows XP
- DASY software
- Remove control with teach pendant and additional circuitry for robot safety such as warming lamps, etc.
- The SAM twin phantom
- A device holder
- Tissue simulating liquid
- Dipole for evaluating the proper functioning of the system

components are described in details in the following sub-sections.

4.1. E-Field Probe

The SAR measurement is conducted with the dosimetric probe (manufactured by SPEAG).The probe is specially designed and calibrated for use in liquid with high permittivity. The dosimetric probe has special calibration in liquid at different frequency. This probe has a built in optical surface detection system to prevent from collision with phantom.

➢ E-Field Probe Specification

<EX3DV4 Probe>

Construction	Symmetrical design with triangular core Built-in shielding against static charges PEEK enclosure material (resistant to organic solvents, e.g., DGBE)	 **Photo of EX3DV4**
Frequency	10 MHz to 6 GHz; Linearity: ± 0.2 dB	
Directivity	± 0.3 dB in HSL (rotation around probe axis) ± 0.5 dB in tissue material (rotation normal to probe axis)	
Dynamic Range	10 µW/g to 100 W/kg; Linearity: ± 0.2 dB (noise: typically< 1 µW/g)	
Dimensions	Overall length: 330 mm (Tip: 20 mm) Tip diameter: 2.5 mm (Body: 12 mm) Typical distance from probe tip to dipole centers: 1 mm	

➢ E-Field Probe Calibration

Each probe needs to be calibrated according to a dosimetric assessment procedure with accuracy better than ± 10%. The spherical isotropy shall be evaluated and within ± 0.25dB. The sensitivity parameters (NormX, NormY, and NormZ), the diode compression parameter (DCP) and the conversion factor (ConvF) of the probe are tested. The calibration data can be referred to appendix C of this report.

4.2. Data Acquisition Electronics (DAE)

The data acquisition electronics (DAE) consists of a highly sensitive electrometer-grade preamplifier with auto-zeroing, a channel and gain-switching multiplexer, a fast 16 bit AD-converter and a command decoder and control logic unit. Transmission to the measurement server is accomplished through an optical downlink for data and status information as well as an optical uplink for commands and the clock.

The input impedance of the DAE is 200MOhm; the inputs are symmetrical and floating. Common mode rejection is above 80dB.

Photo of DAE

4.3. Robot

The SPEAG DASY system uses the high precision robots (DASY5: TX60XL) type from Stäubli SA (France). For the 6-axis controllersystem, the robot controller version (DASY5: CS8c) from Stäubli is used. The Stäublirobot series have many features that are important for our application:

- High precision (repeatability ±0.035 mm)
- High reliability (industrial design)
- Jerk-free straight movements
- Low ELF interference (the closed metallic construction shields against motor control fields)

Photo of DASY5

4.4. Measurement Server

The measurement server is based on a PC/104 CPU board with CPU (DASY5: 400 MHz, Intel Celeron), chipdisk (DASY5: 128 MB), RAM (DASY5: 128 MB). The necessary circuits for communication with the DAE electronic box, as well as the 16 bit AD converter system for optical detection and digital I/O interface are contained on the DASY I/O board, which is directly connected to the PC/104 bus of the CPU board.

The measurement server performs all the real-time data evaluation for field measurements and surface detection, controls robot movements and handles safety operations.

Photo of Server for DASY5

4.5. Phantom

<SAM Twin Phantom>

Shell Thickness	2 ± 0.2 mm; Center ear point: 6 ± 0.2 mm	
Filling Volume	Approx. 25 liters	
Dimensions	Length: 1000 mm; Width: 500 mm; Height: adjustable feet	
Measurement Areas	Left Hand, Right Hand, Flat Phantom	**Photo of SAM Phantom**

The bottom plate contains three pair of bolts for locking the device holder. The device holder positions are adjusted to the standard measurement positions in the three sections. A white cover is provided to tap the phantom during off-periods to prevent water evaporation and changes in the liquid parameters. On the phantom top, three reference markers are provided to identify the phantom position with respect to the robot.

<ELI4 Phantom>

Shell Thickness	2 ± 0.2 mm (sagging: <1%)	
Filling Volume	Approx. 30 liters	
Dimensions	Major ellipse axis: 600 mm Minor axis:400 mm	**Photo of ELI4 Phantom**

The ELI4 phantom is intended for compliance testing of handheld and body-mounted wireless devices in the

frequency range of 30 MHz to 6 GHz. ELI4 is fully compatible with standard and all known tissue simulating liquids.

4.6. Device Holder

The SAR in the phantom is approximately inversely proportional to the square of the distance between the source and the liquid surface. For a source at 5 mm distance, a positioning uncertainty of ±0.5mm would produce a SAR uncertainty of ± 20%. Accurate device positioning is therefore crucial for accurate and repeatable measurements. The positions in which the devices must be measured are defined by the standards.

The DASY device holder is designed to cope with different positions given in the standard. It has two scales for the device rotation (with respect to the body axis) and the device inclination (with respect to the line between the ear reference points). The rotation center for both scales is the ear reference point (ERP).Thus the device needs no repositioning when changing the angles.

The DASY device holder is constructed of low-loss POM material having the following dielectric parameters: relative permittivity ε = 3 and loss tangent δ = 0.02. The amount of dielectric material has been reduced in the closest vicinity of the device, since measurements have suggested that the influence of the clamp on the test results could thus be lowered.

Device Holder

4.7. Data Storage and Evaluation

➢ Data Storage

The DASY software stores the assessed data from the data acquisition electronics as raw data (in microvolt readings from the probe sensors), together with all the necessary software parameters for the data evaluation (probe calibration data, liquid parameters and device frequency and modulation data) in measurement files. The post-processing software evaluates the desired unit and format for output each time the data is visualized or exported. This allows verification of the complete software setup even after the measurement and allows correction of erroneous parameter settings. For example, if a measurement has been performed with an incorrect crest factor parameter in the device setup, the parameter can be corrected afterwards and the data can be reevaluated.

The measured data can be visualized or exported in different units or formats, depending on the selected probe type (e.g., [V/m], [A/m], [W/kg]). Some of these units are not available in certain situations or give meaningless results, e.g., a SAR-output in a non-lose media, will always be zero. Raw data can also be exported to perform the evaluation with other software packages.

➢ Data Evaluation

The DASY post-processing software (SEMCAD) automatically executes the following procedures to calculate the field units from the microvolt readings at the probe connector. The parameters used in the evaluation are stored in the configuration modules of the software:

Probe parameters:	- Sensitivity	$Norm_i$, a_{i0}, a_{i1}, a_{i2}
	- Conversion factor	$ConvF_i$
	- Diode compression point	dcp_i
Device parameters:	- Frequency	f
	- Crest factor	cf
Media parameters:	- Conductivity	σ
	- Density	ρ

These parameters must be set correctly in the software. They can be found in the component documents or they can be imported into the software from the configuration files issued for the DASY components. In the direct measuring mode of the multi-meter option, the parameters of the actual system setup are used. In the scan visualization and export modes, the parameters stored in the corresponding document files are used.

The first step of the evaluation is a linearization of the filtered input signal to account for the compression characteristics of the detector diode. The compensation depends on the input signal, the diode type and the DC-transmission factor from the diode to the evaluation electronics. If the exciting field is pulsed, the crest factor of the signal must be known to correctly compensate for peak power.

The formula for each channel can be given as:

$$V_i = U_i + U_i^2 \cdot \frac{cf}{dcp_i}$$

with V_i= compensated signal of channel i, (i = x, y, z)
U_i = input signal of channel i, (i = x, y, z)
cf = crest factor of exciting field (DASY parameter)
dcp_i = diode compression point (DASY parameter)

From the compensated input signals, the primary field data for each channel can be evaluated:

E-field Probes: $E_i = \sqrt{\frac{V_i}{Norm_i \cdot ConvF}}$

H-field Probes: $H_i = \sqrt{V_i} \cdot \frac{a_{i0}+a_{i1}f+a_{i2}f^2}{f}$

with V_i = compensated signal of channel i,(i= x, y, z)
$Norm_i$= sensor sensitivity of channel i, (i= x, y, z), μV/(V/m)^2 for E-field Probes
ConvF= sensitivity enhancement in solution
a_{ij}= sensor sensitivity factors for H-field probes
f = carrier frequency [GHz]
E_i= electric field strength of channel iin V/m
H_i= magnetic field strength of channel iin A/m

The RSS value of the field components gives the total field strength (Hermitian magnitude):

$$E_{tot} = \sqrt{E_x^2 + E_y^2 + E_z^2}$$

The primary field data are used to calculate the derived field units.

$$SAR = E_{tot}^2 \cdot \frac{\sigma}{\rho \cdot 1000}$$

with SAR = local specific absorption rate in W/kg
E_{tot}= total field strength in V/m
σ = conductivity in [mho/m] or [Siemens/m]
ρ = equivalent tissue density in g/cm^3

Note that the density is set to 1, to account for actual head tissue density rather than the density of the tissue simulating liquid.

5. Test Equipment List

Manufacturer	Name of Equipment	Type/Model	Serial Number	Calibration	
				Last Cal.	Due Date
SPEAG	2600MHz System Validation Kit	D2600V2	1058	Jun. 19, 2021	Jun. 18,2024
Rohde & Schwarz	UNIVERSAL RADIO COMMUNICATION TESTER	CMU 200	117888	Oct.22, 2021	Oct.21, 2022
Rohde & Schwarz	UNIVERSAL RADIO COMMUNICATION TESTER	CMW500	1201.0002K50-104209-JC	Oct.22, 2021	Oct.21, 2022
SPEAG	Data Acquisition Electronics	DAE4	387	Sept.06,2021	Sept.05,2022
SPEAG	Dosimetric E-Field Probe	EX3DV4	7396	May 06,2021	May 05,2022
Agilent	ENA Series Network Analyzer	E5071C	MY46317418	Oct.22, 2021	Oct.21, 2022
SPEAG	DAK	DAK-3.5	1226	NCR	NCR
SPEAG	SAM Twin Phantom	QD000P40CD	1802	NCR	NCR
SPEAG	ELI Phantom	QDOVA004AA	2058	NCR	NCR
AR	Amplifier	ZHL-42W	QA1118004	NCR	NCR
Agilent	Power Meter	N1914A	MY50001102	Oct.22, 2021	Oct.21, 2022
Agilent	Power Sensor	N8481H	MY51240001	Oct.22, 2021	Oct.21, 2022
R&S	Spectrum Analyzer	N9020A	MY51170037	Oct.22, 2021	Oct.21, 2022
Agilent	Signal Generation	N5182A	MY48180656	Oct.22, 2021	Oct.21, 2022
Worken	Directional Coupler	0110A05601O-10	COM5BNW1A2	Oct.22, 2021	Oct.21, 2022

Note:

1. The calibration certificate of DASY can be referred to appendix C of this report.
2. The dipole calibration interval can be extended to 3 years with justification. The dipoles are also not physically damaged, or repaired during the interval.
3. The Insertion Loss calibration of Dual Directional Coupler and Attenuator were characterized via the network analyzer and compensated during system check.
4. The dielectric probe kit was calibrated via the network analyzer, with the specified procedure (calibrated in pure water) and calibration kit (standard) short circuit, before the dielectric measurement. The specific procedure and calibration kit are provided by Agilent.
5. In system check we need to monitor the level on the power meter, and adjust the power amplifier level to have precise power level to the dipole; the measured SAR will be normalized to 1W input power according to the ratio of 1W to the input power to the dipole. For system check, the calibration of the power amplifier is deemed not critically required for correct measurement; the power meter is critical and we do have calibration for it

6. Tissue Simulating Liquids

For the measurement of the field distribution inside the SAM phantom with DASY, the phantom must be

filled with around 25 liters of homogeneous body tissue simulating liquid. For head SAR testing, the liquid height from the ear reference point (ERP) of the phantom to the liquid top surface is larger than 15 cm, which is shown in Fig. 6.1. For body SAR testing, the liquid height from the center of the flat phantom to the liquid top surface is larger than 15 cm, which is shown as followed:

Photo of Liquid Height for Head SAR

Photo of Liquid Height for Body SAR

The following table gives the recipes for tissue simulating liquid.

Frequency (MHz)	Water (%)	Sugar (%)	Cellulose (%)	Salt (%)	Preventol (%)	DGBE (%)	Conductivity (σ)	Permittivity (εr)
For Head								
900	40.3	57.9	0.2	1.4	0.2	0	0.97	41.5
1750	55.2	0	0	0.3	0	44.5	1.37	40.1
1800,1900,2000	55.2	0	0	0.3	0	44.5	1.40	40.0
2450	55.0	0	0	0	0	45.0	1.80	39.2
2600	54.8	0	0	0.1	0	45.1	1.96	39.0
For Body								
900	50.8	48.2	0	0.9	0.1	0	0.97	55.2
1750	70.2	0	0	0.4	0	29.4	1.49	53.4
1800,1900,2000	70.2	0	0	0.4	0	29.4	1.52	53.3
2450	68.6	0	0	0	0	31.4	1.95	52.7
2600	65.5	0	0	0	0	31.5	2.16	52.5

The following table shows the measuring results for simulating liquid.

Measured Frequency (MHz)	Target Tissue		Measured Tissue				Liquid Temp.	Test Data
	ε_r	σ	ε_r	Dev. (%)	σ	Dev. (%)		
2600	52.2	2.16	52.82	1.19	2.25	4.17	22.0℃	11/12/2021

7. System Verification Procedures

Each DASY system is equipped with one or more system validation kits. These units, together with the predefined measurement procedures within the DASY software, enable the user to conduct the system performance check and system validation. System validation kit includes a dipole, tripod holder to fix it underneath the flat phantom and a corresponding distance holder.

- **Purpose of System Performance check**

The system performance check verifies that the system operates within its specifications. System and operator errors can be detected and corrected. It is recommended that the system performance check be performed prior to any usage of the system in order to guarantee reproducible results. The system performance check uses normal SAR measurements in a simplified setup with a well characterized source. This setup was selected to give a high sensitivity to all parameters that might fail or vary over time. The system check does not intend to replace the calibration of the components, but indicates situations where the system uncertainty is exceeded due to drift or failure.

- **System Setup**

In the simplified setup for system evaluation, the EUT is replaced by a calibrated dipole and the power source is replaced by a continuous wave that comes from a signal generator. The calibrated dipole must be placed beneath the flat phantom section of the SAM twin phantom with the correct distance holder. The distance holder should touch the phantom surface with a light pressure at the reference marking and be oriented parallel to the long side of the phantom. The equipment setup is shown below:

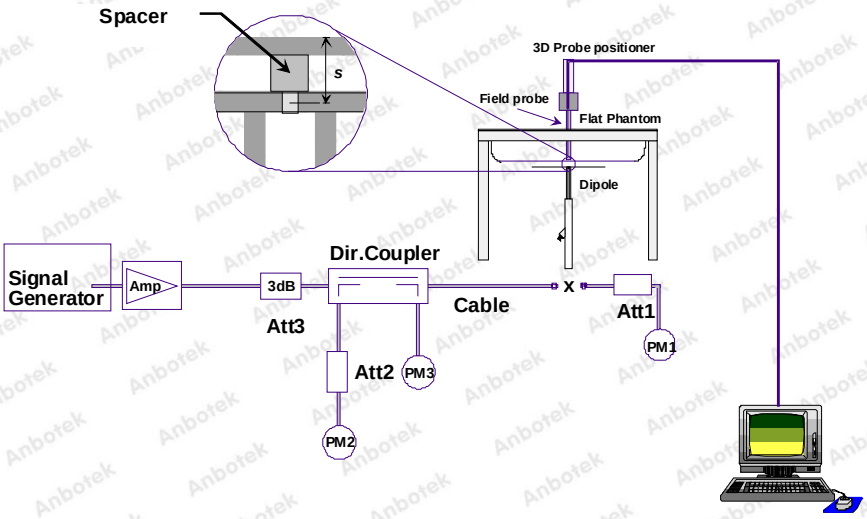

System Setup for System Evaluation

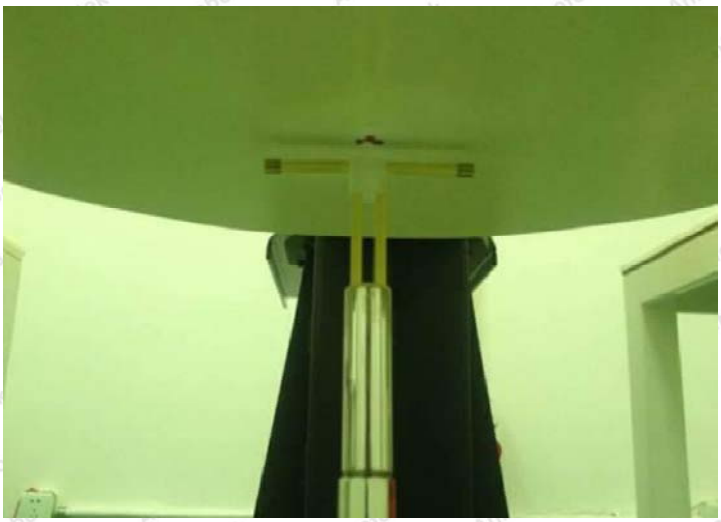

Photo of Dipole Setup

- **Validation Results**

Comparing to the original SAR value provided by SPEAG, the verification data should be within its specification of 10%. The table below shows the target SAR and measured SAR after normalized to 1W input power. It indicates that the system performance check can meet the variation criterion and the plots can be referred to Appendix A of this report.

Date	Frequency (MHz)	Power fed onto reference dipole (mW)	Targeted SAR (W/kg)	Measured SAR (W/kg)	Normalized SAR (W/kg)	Deviation (%)
11/12/2021	2600	250	55.3	13.87	55.48	0.33

Target and Measurement SAR after Normalized

8. EUT Testing Position

8.1. Body Worn Position

Body-worn operating configurations are tested with the belt-clips and holsters attached to the device and positionedagainst a flat phantom in a normal use configuration. Per KDB 648474 D04, body-worn accessoryexposure is typically related to voice mode operations when handsets are carried in body-worn accessories. Thebody-worn accessory procedures in FCC KDB 447498 D01 should be used to test for body-worn accessory SARcompliance, without a headset connected to it. This enables the test results for such configuration to be compatible withthat required for hotspot mode when the body-worn accessory test separation distance is greater than or equal to thatrequired for hotspot mode, when applicable. When the reported SAR for body-worn accessory, measured without aheadset connected to the handset is < 1.2 W/kg, the highest reported SAR configuration for that wireless mode andfrequency band should be repeated for that body-worn accessory with a handset attached to the handset.

Accessories for body-worn operation configurations are divided into two categories: those that do not contain metalliccomponents and those that do contain metallic components and those that do contain metallic components. Whenmultiple accessories that do not contain metallic components are supplied with the device, the device is tested with onlythe accessory that dictates the closest spacing to the body. Then multiple accessories that contain metallic components are test with the device with each accessory. If multiple accessories share an identical metallic component (i.e. the same metallic belt-chip used with different holsters with no other metallic components) only the accessory that dictates the closest spacing to the body is tested.

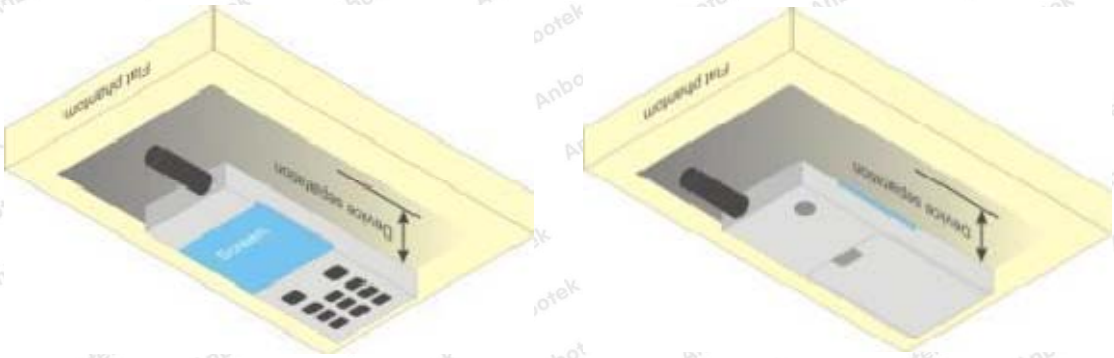

Body Worn Position

9. Measurement Procedures

The measurement procedures are as follows:

(a) Use base station simulator (if applicable) or engineering software to transmit RF power continuously (continuous Tx) in the middle channel.
(b) Keep EUT to radiate maximum output power or 100% duty factor (if applicable)
(c) Measure output power through RF cable and power meter.
(d) Place the EUT in the positions as setup photos demonstrates.
(e) Set scan area, grid size and other setting on the DASY software.
(f) Measure SAR transmitting at the middle channel for all applicable exposure positions.
(g) Identify the exposure position and device configuration resulting the highest SAR
(h) Measure SAR at the lowest and highest channels attheworst exposure position and device configuration if applicable.

According to the test standard, the recommended procedure for assessing the peak spatial-average SAR value consists of the following steps:

(a) Power reference measurement
(b) Area scan
(c) Zoom scan
(d) Power drift measurement

9.1. Spatial Peak SAR Evaluation

The procedure for spatial peak SAR evaluation has been implemented according to the test standard. It can be conducted for 1g and 10g, as well as for user-specific masses. The DASY software includes all numerical procedures necessary to evaluate the spatial peak SAR value.

The base for the evaluation is a "cube" measurement. The measured volume must include the 1g and 10g cubes with the highest averaged SAR values. For that purpose, the center of the measured volume is aligned to the interpolated peak SAR value of a previously performed area scan.

The entire evaluation of the spatial peak values is performed within the post-processing engine (SEMCAD). The system always gives the maximum values for the 1g and 10g cubes. The algorithm to find the cube with highest averaged SAR is divided into the following stages:

(a) Extraction of the measured data (grid and values) from the Zoom Scan
(b) Calculation of the SAR value at every measurement point based on all stored data (A/D values and measurement parameters)
(c) Generation of a high-resolution mesh within the measured volume
(d) Interpolation of all measured values form the measurement grid to the high-resolution grid
(e) Extrapolation of the entire 3-D field distribution to the phantom surface over the distance from sensor to surface
(f) Calculation of the averaged SAR within masses of 1g and 10g

9.2. Power Reference Measurement

The Power Reference Measurement and Power Drift Measurements are for monitoring the power drift of the device under test in the batch process. The minimum distance of probe sensors to surface determines the closest measurement point to phantom surface. This distance cannot be smaller than the distance of sensor calibration points to probe tip as defined in the probe properties.

9.3. Area Scan Procedures

The area scan is used as a fast scan in two dimensions to find the area of high field values, before doing a fine measurement around the hot spot. The sophisticated interpolation routines implemented in DASY software can find the maximum found in the scanned area, within a range of the global maximum. The range (in dB0 is specified in the standards for compliance testing. For example, a 2 dB range is required in IEEE standard 1528 and IEC 62209 standards, whereby 3 dB is a requirement when compliance is assessed in accordance with the ARIB standard (Japan), if only one zoom scan follows the area scan, then only the absolute maximum will be taken as reference. For cases where multiple maximums are detected, the number of zoom scans has to be increased accordingly.

Area scan parameters extracted from FCC KDB 865664 D01 SAR measurement 100 MHz to 6 GHz.

	≤ 3 GHz	> 3 GHz
Maximum distance from closest measurement point (geometric center of probe sensors) to phantom surface	5 ± 1 mm	½·δ·ln(2) ± 0.5 mm
Maximum probe angle from probe axis to phantom surface normal at the measurement location	30° ± 1°	20° ± 1°
Maximum area scan spatial resolution: Δx_{Area}, Δy_{Area}	≤ 2 GHz: ≤ 15 mm 2 – 3 GHz: ≤ 12 mm	3 4 GHz: ≤ 12 mm 4 – 6 GHz: ≤ 10 mm
	When the x or y dimension of the test device, in the measurement plane orientation, is smaller than the above, the measurement resolution must be ≤ the corresponding x or y dimension of the test device with at least one measurement point on the test device.	

9.4. Zoom Scan Procedures

Zoom scans are used assess the peak spatial SAR values within a cubic averaging volume containing 1 gram and 10gram of simulated tissue. The zoom scan measures points (refer to table below) within a cube shoes base faces are centered on the maxima found in a preceding area scan job within the same procedure. When the measurement is done, the zoom scan evaluates the averaged SAR for 1 gram and 10 gram and displays these values next to the job's label.

Zoom scan parameters extracted from FCC KDB 865664 D01 SAR measurement 100 MHz to 6 GHz.

			≤ 3 GHz	> 3 GHz
Maximum zoom scan spatial resolution: Δx_{Zoom}, Δy_{Zoom}			≤ 2 GHz: ≤ 8 mm 2 – 3 GHz: ≤ 5 mm*	3 – 4 GHz: ≤ 5 mm* 4 – 6 GHz: ≤ 4 mm*
Maximum zoom scan spatial resolution, normal to phantom surface	uniform grid: $\Delta z_{Zoom}(n)$		≤ 5 mm	3 4 GHz: ≤ 4 mm 4 5 GHz: ≤ 3 mm 5 – 6 GHz: ≤ 2 mm
	graded grid	$\Delta z_{Zoom}(1)$: between 1st two points closest to phantom surface	≤ 4 mm	3 – 4 GHz: ≤ 3 mm 4 – 5 GHz: ≤ 2.5 mm 5 – 6 GHz: ≤ 2 mm
		$\Delta z_{Zoom}(n>1)$: between subsequent points	$\leq 1.5 \cdot \Delta z_{Zoom}(n-1)$	
Minimum zoom scan volume	x, y, z		≥ 30 mm	3 – 4 GHz: ≥ 28 mm 4 – 5 GHz: ≥ 25 mm 5 – 6 GHz: ≥ 22 mm

Note: δ is the penetration depth of a plane-wave at normal incidence to the tissue medium; see draft standard IEEE P1528-2011 for details.

* When zoom scan is required and the *reported* SAR from the *area scan based 1-g SAR estimation* procedures of KDB 447498 is ≤ 1.4 W/kg, ≤ 8 mm, ≤ 7 mm and ≤ 5 mm zoom scan resolution may be applied, respectively, for 2 GHz to 3 GHz, 3 GHz to 4 GHz and 4 GHz to 6 GHz.

9.5. Volume Scan Procedures

The volume scan is used for assess overlapping SAR distributions for antennas transmitting in different frequency bands. It is equivalent to an oversized zoom scan used in standalone measurements. The measurement volume will be used to enclose all the simultaneous transmitting antennas. For antennas transmitting simultaneously in different frequency bands, the volume scan is measured separately in each frequency band. In order to sum correctly to compute the 1g aggregateSAR, the EUT remain in the same test position for all measurements and all volume scan use the same spatial resolution and grid spacing. When all volume scan were completed, the software, SEMCAD postprocessor can combine and subsequently superpose these measurement data to calculating the multiband SAR.

9.6. Power Drift Monitoring

All SAR testing is under the EUT install full charged battery and transmit maximum output power. In DASY measurement software, the power reference measurement and power drift measurement procedures are used for monitoring the power drift of EUT during SAR test. Both these procedures measure the field at a specified reference position before and after the SAR testing. The software will calculate the field difference in dB. If the power drift more than 5%, the SAR will be retested.

10.Conducted Power

LTE Mode:

LTE Band 41				
TX Channel Bandwidth	Frequency (MHz)	RB Size/Offset	Burst Average Power [dBm]	
			QPSK	16QAM
5 MHz	2557.5	1 RB low	21.89	21.17
		1 RB mid	21.96	21.16
		1 RB high	21.86	21.16
		50% RB low	20.91	19.99
		50% RB mid	20.89	19.97
		50% RB high	20.88	19.95
		100% RB	20.84	19.98
	2600.0	1 RB low	21.84	21.04
		1 RB mid	21.89	21.06
		1 RB high	21.77	21.03
		50% RB low	20.88	19.98
		50% RB mid	20.88	19.95
		50% RB high	20.86	19.94
		100% RB	20.78	20.04
	2652.5	1 RB low	21.88	21.02
		1 RB mid	21.80	21.09
		1 RB high	21.80	20.99
		50% RB low	20.74	19.86
		50% RB mid	20.59	19.86
		50% RB high	20.59	19.87
		100% RB	20.67	19.88
10 MHz	2560.0	1 RB low	22.09	20.92
		1 RB mid	21.95	20.81
		1 RB high	21.98	20.68
		50% RB low	21.18	20.58
		50% RB mid	21.19	20.58
		50% RB high	21.19	20.58
		100% RB	21.18	20.22
	2600.0	1 RB low	21.92	20.97
		1 RB mid	22.01	21.26
		1 RB high	22.18	21.40

		50% RB low	20.88	19.94
		50% RB mid	20.79	19.96
		50% RB high	20.83	19.96
		100% RB	20.90	20.11
	2650.0	1 RB low	23.37	22.38
		1 RB mid	23.63	22.63
		1 RB high	23.32	22.36
		50% RB low	22.41	21.35
		50% RB mid	22.33	21.35
		50% RB high	22.39	21.28
		100% RB	22.34	21.31
15 MHz	2562.5	1 RB low	21.84	21.00
		1 RB mid	21.60	20.71
		1 RB high	21.64	20.78
		50% RB low	20.69	19.78
		50% RB mid	20.70	19.79
		50% RB high	20.71	19.79
		100% RB	20.61	19.82
	2600.0	1 RB low	22.36	20.69
		1 RB mid	22.21	20.39
		1 RB high	21.98	20.34
		50% RB low	21.24	20.37
		50% RB mid	21.25	20.37
		50% RB high	21.25	20.37
		100% RB	21.19	20.37
	2647.5	1 RB low	21.98	21.33
		1 RB mid	22.05	21.29
		1 RB high	22.13	21.61
		50% RB low	20.89	19.84
		50% RB mid	20.74	19.84
		50% RB high	20.74	19.84
		100% RB	20.91	20.05
20 MHz	2565.0	1 RB low	21.70	21.23
		1 RB mid	21.50	21.11
		1 RB high	21.72	21.21
		50% RB low	20.72	19.93
		50% RB mid	20.74	19.94
		50% RB high	20.75	19.94
		100% RB	20.61	19.78
	2600.0	1 RB low	23.70	21.40

		1 RB mid	23.17	21.29
		1 RB high	22.04	21.06
		50% RB low	22.31	20.34
		50% RB mid	22.20	20.35
		50% RB high	22.20	20.35
		100% RB	22.10	20.25
	2645.0	1 RB low	21.80	20.48
		1 RB mid	21.77	20.59
		1 RB high	21.98	20.67
		50% RB low	20.85	19.98
		50% RB mid	20.85	19.98
		50% RB high	20.85	19.98
		100% RB	20.81	19.92

NFC

Mode	Frequency (MHz)	Average Power (dBm)
NFC	13.56	-6.33