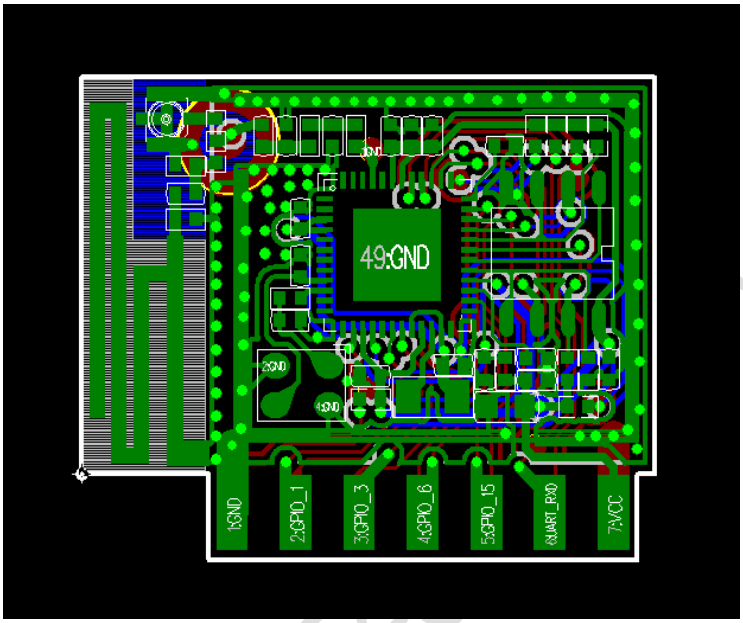

ShenZhen Gather Genius Technology Limited
UA504 Wi-Fi Module

ShenZhen JIXIAN Co., Ltd.

Specification

Version 1.0

DATE: 2017.12.14

Disclaimer and notice

The document is provided "AS IS," without warranty of any kinds, including the implied warranties of merchantability and applies to any guarantee for a particular purpose, or non infringement, and any proposal, specification or sample of any guarantee mentioned anywhere else.

This document does not bear any responsibility, including the use of the document information from infringement of any patent infringement liability.

This document is not here by estoppel or otherwise, any intellectual property rights is granted the license, whether express or implied license.

The information in this document might be modified for upgrade or other reasons. JIXIAN corporation reserves the rights to make change without notice. This document is used for design guide only, JIXIAN corporation try the best to supply the correct information, but it does not assure there is not any error in this document. All the ostensive or implied states, information, suggestion are not guaranteed.

ShenZhen JIXIAN Technology Co., Ltd.

INDEX

1. GENERAL DESCRIPTION .....

1.1. Features .....

2. Pin assignment .....

3. Package and dimensions .....

4. Hardware design .....

4.1. Minimum system .....

4.2. PCB guideline .....

5. Main function description .....

5.1. MCU .....

5.2. Memory .....

5.3. Interface .....

5.4. Absolute maximum ratings .....

5.5. Recommended operating range .....

5.6. Digital IO DC characteristics .....

6. RF specification .....

7. Power consumption .....

8. Recommended Reflow Profile .....

9. AT instruction .....

9.1. General AT instruction description .....

9.2. Operation instruction description .....

9.3. TCP/UDP port .....

Shenzhen JIXIAN Technology Co., Ltd.

9.4. GPIO/PWM instructions description .....

9.5. SMART LINK instruction description .....

9.6. SOFT AP instructions description .....

9.7. RF instructions description .....

ShenZhen JIXIAN Technology Co., Ltd.

1. GENERAL DESCRIPTION

UA504 Wi-Fi module is designed by JIXIAN Corporation. It integrates antenna in the PCB and reserves various interfaces for use, such as PWM, GPIO for smart application, I2C for extra sensor and UART for communication with external chip or device. The module supports standard IEEE802.11 b/g/n protocol, TCP/IP stack and support STA&AP work mode. It can be used in the present device for additional Wi-Fi feature, or to design standalone network controller.

The MCU of UA504 module is a total solution for Wi-Fi network, which can be used separately. In this case, it can boot from external flash directly. And it can be designed to work with external MCU.

1.1. Features

- Support 802.11 b/g/n;
- Embedded TCP/IP protocol stack;
- Integrated TR switch/Balun/LNA/PA/antenna;
- Integrated 8Mbits SPI flash, support 16Mbits max.;
- **Supply voltage range: 3.0V~3.6VDC, single 3.3V is recommended to use.**
- Support OTA firmware upgrade;
- Support STA, AP mode;
- Support Smart Link;
- Support UART/I2C/GPIO/PWM;

	parameter	description
Hardware feature	*General description*	
	Network standard	802.11 b/g/n
	Frequency range	2.4GHz-2.5GHz (2400M-2483.5M)
	Supply voltage	**3.0~3.6V (single 3.3V is recommended)**
	Operating current	Max: 282mA
	FLASH	8M (bits)
	SRAM	192K (Byte)

Shenzhen JIXIAN Technology Co., Ltd.

	Package	16mm * 24mm * 3.3mm
	Pin type and number	Gold finger, 14pin
	Antenna	In PCB
	Operation temperature range	-20°~85°C
	Storage temperature range	-40°~125°C
	Hardware interface	
	UART	Support 2 UART, one for download and debug, one for communication with external chip or device
	I2C	Support 1 I2C
	GPIO	Support 10 GPIO
	PWM	Support 1 HW PWM, 4 SW PWM
	USB	Not support
	SDIO	Not support
Software feature	Work mode	STA/AP
	Security mechanism	WEP/WPA-PSK/WPA2-PSK
	Encryption type	WEP/TKIP/AES
	Firmware upgrade	UART/OTA
	Network protocol	TCP/UDP/DHCP/ARP/ICMP
	Customer configuration	AT+ Instruction Set, Smart LinkAPP

Table 1 Major hardware and software features

ShenZhen JIXIAN Technology Co., Ltd.

2. Pin assignment

There are 14 pins in UA504 module, Figure2 is the pin assignment, Table 2 is the pin definition.

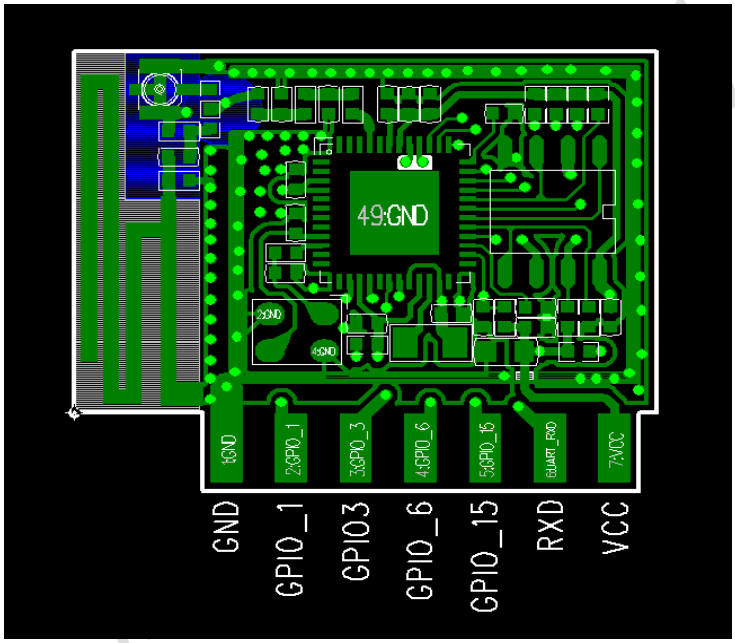

Figure 1 UA504 top layer

ShenZhen JIXIAN Technology Co., Ltd.

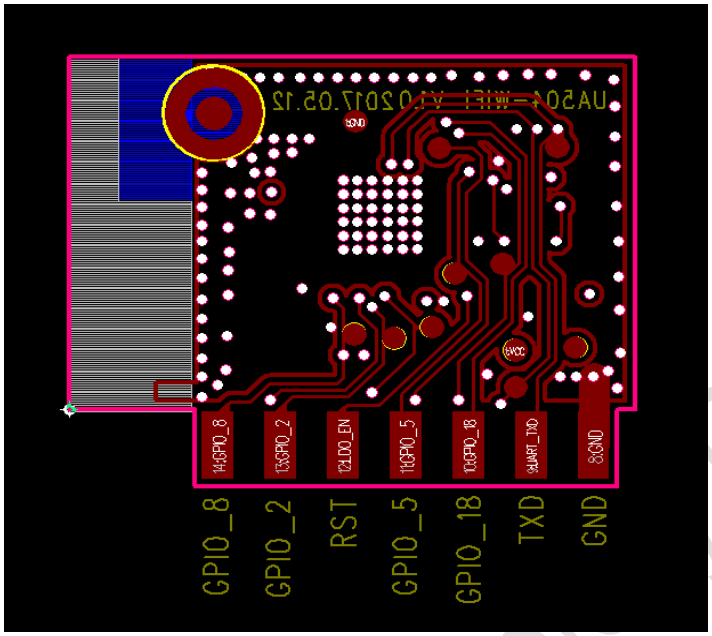

Figure 2 UA504 bottom layer

No.	Pin name	description
1	GND	GND
2	GPIO_1	GPIO1 ; I2C_CLK
3	GPIO_3	GPIO3 ; I2C_SDA
4	GPIO_6	GPIO6; UART_DEBUG_RXD
5	GPIO_15	GPIO15
6	RXD	UART_DATA_RXD; GPIO19
7	VCC	VDD 3.3V
8	GND	GND
9	TXD	UART_DATA_TXD; GPIO20
10	GPIO_18	GPIO18
11	GPIO_5	GPIO5; UART_DEBUG_TXD

ShenZhen JIXIAN Technology Co., Ltd.

12	RST	Reset pin, active low
13	GPIO_2	GPIO2
14	GPIO_8	GPIO8

Table 2 UA504 pin definition

3. Package and dimensions

The dimensions of UA504 module is 23.45mm * 19Mm * 3.3mm (Figure 3), it integrates 3 dBi PCB antenna.

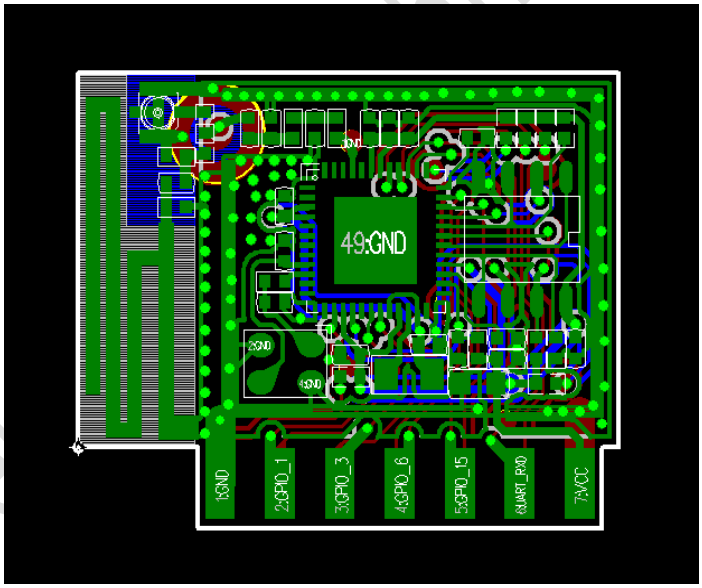

Figure 3 UA504module exterior

ShenZhen JIXIAN Technology Co., Ltd.

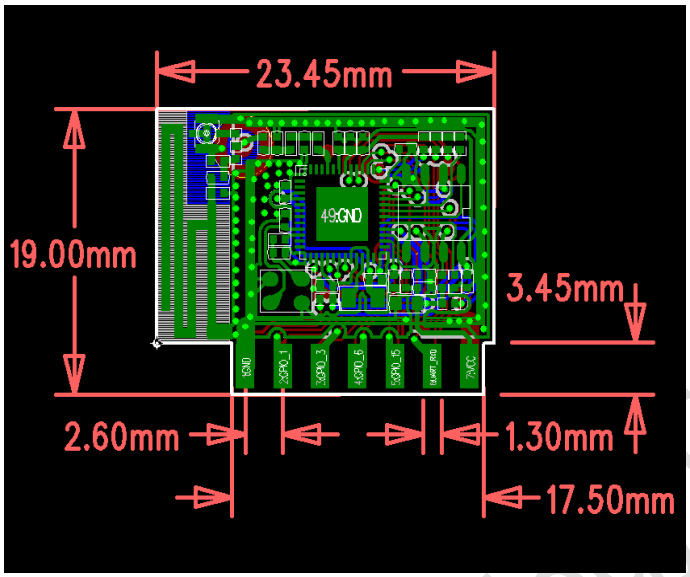

Figure 4 UA504 module dimensions

Length	width	height	PAD （bottom）	Pin pitch
23.45 mm	19 mm	3.3 mm	1.3 mm x 3 mm	2.6 mm

Table 3 UA504 module dimensions

ShenZhen JIXIAN Technology Co., Ltd.

4. Hardware design

4.1. Minimum system

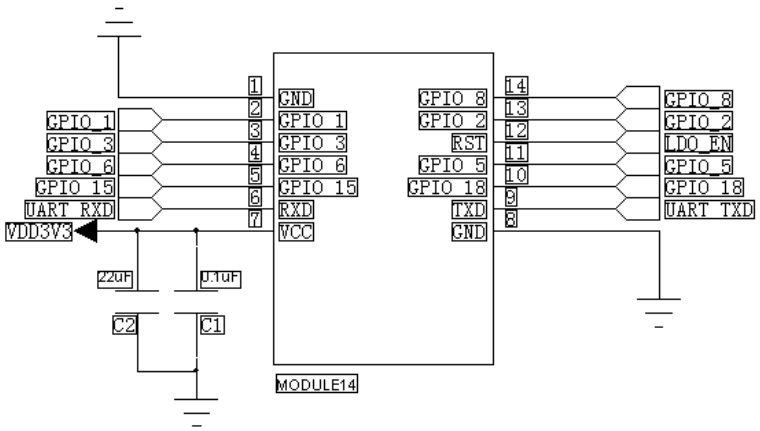

Figure 5 UA504

Note:

1. Supply voltage 3.3V and supply current no less than 300mA are recommended.
2. The maximum drive current of GPIO interface is 4mA.
3. RST works in low-level. Built-in 10k pull-up resistor .
4. The RXD is connected to external MCU TXD and TXD connected to external MCU RXD.
5. Connecting debug UART interface and pull RST down 15ms then release when upgrade the firmware. Another method is software resetting.
6. OTA firmware upgrade can be started with APP, AT instruction and IO interface.

Shenzhen JIXIAN Technology Co., Ltd.

4.2. PCB guideline

For the best RF performance when the module welded on the PCB ,the copper 、components、routing can not be under the antenna and make sure enough clearance area as following diagram.

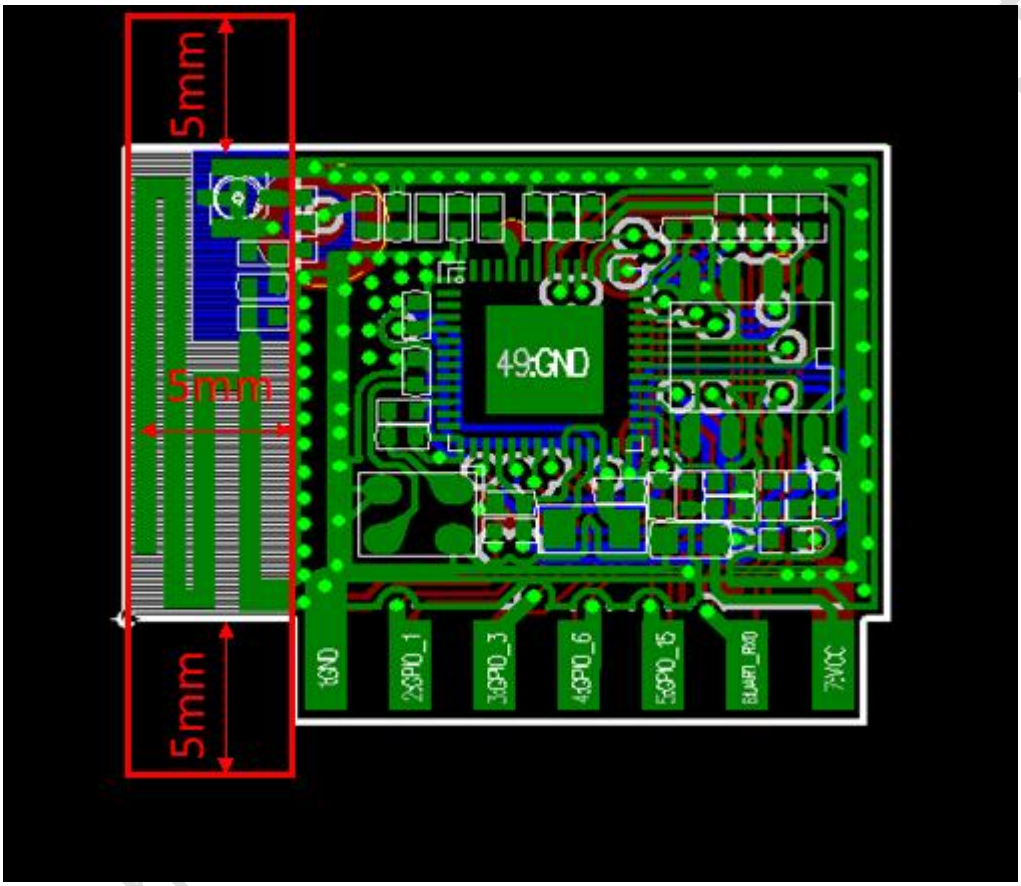

Figure 6 UA504 module antenna clearance diagram

5. Main function description

5.1. MCU

MCU of UA504 module is a low-power single chip, it supply integrated solution for embedded smart family system. It integrated 2.4 GHz WLAN CMOS PA and LNA. The RF front-end is

single-ended double-direction. Also, it integrates LDO and DC-DC converter, which can separate digital circuit and analog circuit for lower noise.

5.2. Memory

5.2.1. Built- in SRAM

MCU integrates 192KB SRAM。

5.2.2. SPI Flash

Supports external SPI FLASH up to 16M. UA504 module collocates 8Mb FLASH.

5.3. Interface

Type	Pin name	Description
PWM	GPIO_8 H/W;4S/W PWM	1 HW PWM (GPIO_8) , 4 SW PWM
I2C	GPIO_1; GPIO_3	Can be used for external sensors
UART	RXD: UART_DATA_RXD, TXD:UART_DATA_TXD GPIO_5: UART_DEBUG_TXD GPIO_6: UART_DEBUG_RXD	Support 2 UART interface Download and debug: GPIO_5, GPIO_6 Communication: RXD, TXD

Table 4 Interface description

5.4. Absolute maximum ratings

	conditions	range	unit
Storage temperature		-40 to 125	℃
Highest temperature for soldering		250	℃
Supply voltage		**-0.3 to +3.6**	**V**

Table 5 absolute maximum ratings

Shenzhen JIXIAN Technology Co., Ltd.

5.5. Recommended operating range

Operation condition	name	Min.	Type	Max.	Unit
Temperature		-20	20	85	℃
Voltage	**VDD**	**2.85**	**3.3**	**3.6**	**V**

Table 6 recommended work conditions

5.6. Digital IO DC characteristics

description	Name	Min	Type	Max	Unit
Input low level	V_{IL}	-0.28		0.6	V
Input high level	V_{IH}	2.0		3.63	V
Output low level	V_{OL}	-0.28		0.4	V
Output high level	V_{OH}	2.4		VDD+0.33	V

Notice: If no special instruction, the test conditions are: the VDD is 3.3V and the temperature is 20 ℃。

Table 7 digital level feature

6. RF specification

Parameter	Min.	Type	Max.	Unit
General parameter				
Frequency	2412		2484	MHz
Input impedance		50		Ω
Transmit power				
Output power (802.11b@11Mbps)	17	18	19	dBm
Output power (802.11g@54Mbps)	14	15	16	dBm

Shenzhen JIXIAN Technology Co., Ltd.

Output power (802.11n@HT20,MCS7)	14	15	16	dBm
Receive sensitivity				
Sensitivity (802.11b@11Mbps,CCK)	-86.0	-87.0	-88.0	dBm
Sensitivity (802.11g@54Mbps,OFDM)	-70	-72	-73.5	dBm
Sensitivity (802.11n@HT20,MCS7)	-68	-70	-72	dBm
Adjacent channel rejection				
OFDM, 6 Mbps		37		dB
OFDM, 54 Mbps		21		dB
HT20, MCS0		37		dB
HT20, MCS7		20		dB

Table 8 RF specification

7. Power consumption

Mode	Min	Type	Max	Unit
Transmit 802.11b, CCK 11Mbps, P_{OUT}=+18.5dBm		250		mA
Transmit 802.11g, OFDM 54Mbps, P_{OUT} =+15dBm		220		mA
Transmit 802.11n, MCS7, P_{OUT} =+15dBm		220		mA
Receive 802.11b,CCK,1Mbp		60		mA
Receive 802.11g,OFDM,54Mbp		60		mA
Receive 802.11n,HT20,MCS7		60		mA
RX Power Saving, DTIM=1		2		mA

Shenzhen JIXIAN Technology Co., Ltd.

Sleep Mode		0.2		mA
Operating Mode		75		mA
Power Off		4		uA

Table 9 power consumption (The data are based on 3.3V VCC.)

8. Recommended Reflow Profile

Peak Temperature: <250℃

Number of Times: ≤2 times

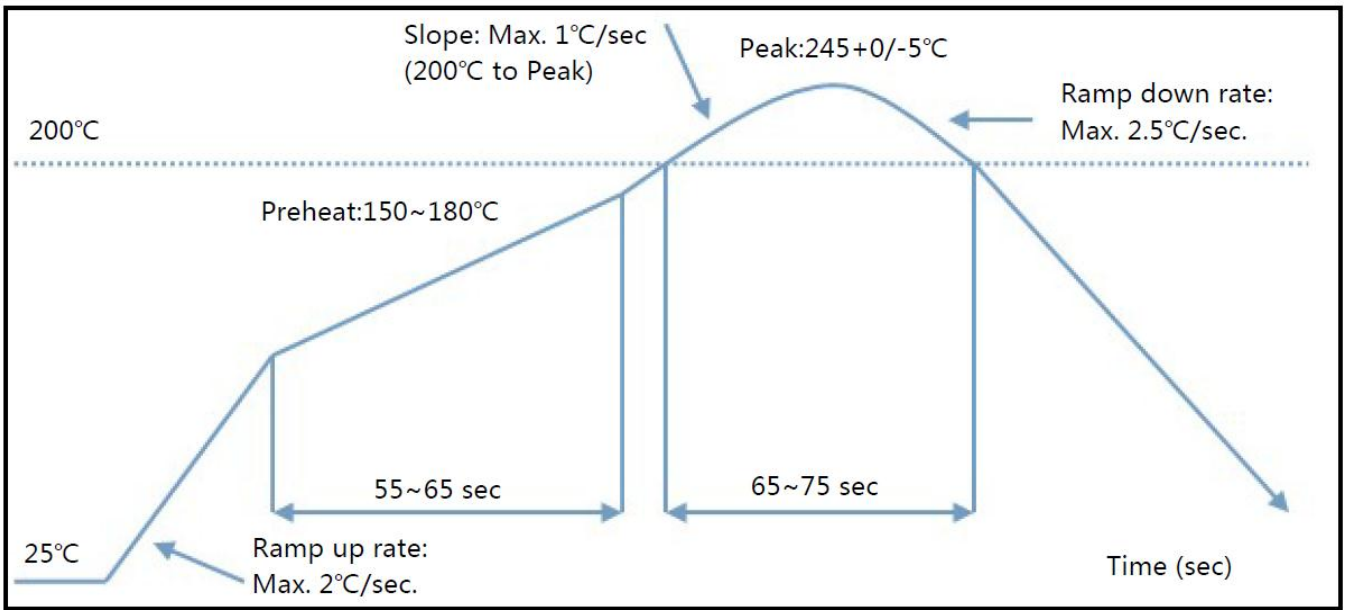

JIXIAN Technology Co., Ltd.

Figure 5 Soldering temperature curve

9. AT instruction

9.1. General AT instruction description

9.1.1. Reset

Instruction	AT+REBOOT
parameter	N
return	N

9.1.2. Read firmware version

Instruction	AT+VERSION=?
parameter	N
return	The firmware version number
example	ssv6060>:AT+VERSION=? +VERSION:SSV6060.Z0.799.0

9.1.3. Read manufacture information

Instruction	AT+MF_INFO=?
parameter	N
return	Manufacture information
example	ssv6060>:AT+MF_INFO=? +MF_INFO:iComm Company AT+VERSION=OK

9.1.4. Read MAC

Instruction	AT+RADIO_READ_MAC=?
parameter	N

ShenZhen JIXIAN Technology Co., Ltd.

return	Media Access Control Address
example	ssv6060>:AT+GET_LOCALMAC=? local_mac = 00:23:45:67:87:a5

9.1.5. Remove

Instruction	AT+REMOVE_CONF
parameter	N
return	Remove result.
example	ssv6060>:AT+REMOVE_CONF remove_sysconfig rlt = 0

9.2. Operation instruction description

9.2.1. Read network configuration

Instruction	AT+GET_CONFIG=?
parameter	N
return	+GET_CONFIG= wifi_mode, AP_SSID, key, key number, dhcp,IP,Submask ,Gateway
example	If dhcp =1 +GET_CONFIG=0, 7298A,12345678,8,1,0.0.0.0,0.0.0.0,0.0.0.0 If dhcp =0 +GET_CONFIG=0,7298A, 12345678,8,0,192.168.55.243,255.255.255.0,192.168.55.1

9.2.2. Set network configuration manually

Instruction	AT+SET_IFCONFIG= <dhcp> , <IP> , <Submask> , <Gateway>
parameter	<dhcp>: 1:Auto , 0: manual <IP>:xxx.xxx.xxx.xxx (if Dhcp =0) <Submask >: xxx.xxx.xxx.xxx (if Dhcp =0) <Gateway>: xxx.xxx.xxx.xxx (if Dhcp =0)
return	AT+SET_ IFCONFIG =OK

Shenzhen JIXIAN Technology Co., Ltd.

example	AT+SET_IFCONFIG=0,192.168.55.243,255.255.255.0,192.168.55.1 AT+SET_IFCONFIG=1

9.2.3. Set Wi-Fi configuration

Instruction	AT+SET_WIFICONFIG= <mode>, <AP_SSID>, <Key>
parameter	<mode>: 0: STA-mode <AP_SSID> : AP name <Key> : AP password
return	AT+SET_WIFICONFIG=OK
example	AT+SET_WIFICONFIG=0,7298A,88888888

9.2.4. Scan Wi-Fi router

Instruction	AT+SCAN=?
parameter	N
return	+SCAN:7298A, SSV-AP5_2.4G, QA.DIR524, SSV_AP2, TP-LINK_45FE5E, D-Link_DIR-Jay, APET, test, OOX, for.interchannel.wr845n, for.interchannel.c8, Eric_Fw, SSV_AP2, icomm-softap-002345678916, Winnie_NB-PC, EnGenius_wpa2aes, AT+SCAN=OK

9.2.5. Connect Wi-Fi router

Instruction	AT+WIFICONNECT
parameter	N
return	AT+WIFICONNECT=OK
example	If dhcp =1 Got IP address 192.168.43.16 Got netmask 255.255.255.0 Got DNS server 192.168.43.1 Got default router 192.168.43.1

ShenZhen JIXIAN Technology Co., Ltd.

9.2.6. Disconnect Wi-Fi router

Instruction	AT+WIFIDISCONNECT
parameter	N
return	N

9.2.7. Show the AP information

Instruction	AT+SHOWCONNECTAP
parameter	N
return	[0]7298A, ch: 1, rssi: -29 dBm, rssiLevel: 4, security_type = WPA2/AES , HT-MM SGI MCS7

9.2.8. Show all AP

Instruction	AT+SHOWALLAP
parameter	N
return	[0]7298A ch: 1, rssi: - 26 dBm, rssiLevel: 4, security_type = WPA2/AES [1]AP5_2.4G ch: 1, rssi: - 42 dBm, rssiLevel: 4, security_type = WPAWPA2/AES [2]QA.DIR524 ch: 1, rssi: - 47 dBm, rssiLevel: 4, security_type = OPEN/NONE [3]D-Link_DIR-Jay ch: 2, rssi: - 80 dBm, rssiLevel: 2, security_type = OPEN/NONE

9.2.9. Read OTA update status

Instruction	AT+OTASTATUS
parameter	\
return	ok

ShenZhen JIXIAN Technology Co., Ltd.

9.2.10. Start and off AP

Instruction	AT+WAPST=[!?][start]<CR>
parameter	start：start/off AP. 0: off , 1: start
return	+OK=[start]<CR><LF><CR><LF>

9.2.11. Cancel socket automatic connection

Instruction	AT+ACONNSTART
parameter	无
return	ok

9.3. TCP/UDP port

9.3.1. Set TCP port

Instruction	AT+TCPCONNECT=<IP>,<PORT>
parameter	IP : xxx.xxx.xxx.xxx,ex:192.168.112.10 PORT : xxxx,ex:2000
return	socket number : create socket:0

9.3.2. TCP transmission

Instruction	AT+TCPSEND=<socket number>,<data>
parameter	socket number : the socket number got through TCPCONNECT data : string,ex:12345678
return	AT+TCPSEND=OK

9.3.3. Clear TCP port

Instruction	AT+TCPDISCONNECT=<socket>
parameter	N
return	AT+TCPDISCONNECT=OK

ShenZhen JIXIAN Technology Co., Ltd.

example	ssv6060>:AT+TCPDISCONNECT=0 ssv6060>:socked:0 closed AT+TCPDISCONNECT=OK

9.3.4. Set up TCP SERVER link

Instruction	AT+TCPLISTEN=<PORT>
parameter	PORT: number ; ex :2000
return	AT+TCPLISTEN=OK
example	ssv6060>:AT+TCPLISTEN=2000 AT+TCPLISTEN=OK ssv6060>:new connected to listen port(2000), socket:0

9.3.5. Clear TCP SERVER link

Instruction	AT+TCPUNLISTEN=<PORT>
parameter	PORT: number ; ex :2000
return	AT+TCPUNLISTEN=OK

9.3.6. Set up UDP port

Instruction	AT+UDPCREATE=<PORT>
parameter	PORT: number ; ex :2000
return	Socket number : create socket:12
example	ssv6060>:AT+UDPCREATE=2000 create socket:12 AT+UDPCREATE=OK

9.3.7. UDP transmission

Instruction	AT+UDPSEND=<socket>,<Client IP>,<port>,<Data>
parameter	<socket> : the socket number got through UDPCREATE <Client IP> : xxx.xxx.xxx.xxx;ex: 192.168.112.10 <port>: port number

ShenZhen JIXIAN Technology Co., Ltd.

	<Data>: string
return	N
example	AT+UDPSEND=12,192.168.43.23,11111,asdfgh ssv6060>:UDP socked:12 recvdata:fgshfshfh from 192.168.43.23:61148

9.3.8. Close UDP

Instruction	AT+UDPCLOSE =<socket>
parameter	<socket> : the socket number got through UDPCREATE
return	AT+UDPCLOSE=OK
example	ssv6060>:AT+UDPCLOSE=12 AT+UDPCLOSE=OK

9.3.9. NSLOOKUP

Instruction	AT+NSLOOKUP=<domain name>
parameter	<domain name> : the URL domain name
return	The ip address of domain name.
example	ssv6060>:AT+NSLOOKUP=www.163.com start nslookup www.163.com ssv6060>:AT+NSLOOKUP=218.92.220.55

9.4. GPIO/PWM instructions description

9.4.1. Set GPIO direction

Instruction	AT+SET_GPIO=<id>,<mode>
parameter	<id>: GPIO ID. <mode>: 0:input ; 1:output.
return	+OK
example	ssv6060>:AT+SET_GPIO=2,1

Shenzhen JIXIAN Technology Co., Ltd.

9.4.2. Write GPIO

Instruction	AT+WRITE_GPIO=<id>,<value>
parameter	<id>: GPIO ID. <value>: 0:low ; 1:high.
return	+OK
example	ssv6060>:AT+WRITE_GPIO=2,1

9.4.3. Read GPIO

Instruction	AT+READ_GPIO=<Number>
parameter	<Number>
return	On: 1 ; Off: 0
example	ssv6060>:AT+READ_GPIO=3 +GPIO:1

9.4.4. Set PWM

Instruction	AT+SET_PWM=<id>,<Enable>,<Cycle>
parameter	<id>:GPIO ID = 5 (default GPIO8) <Enable>: 0 , 1 <Cycle>: 0 ~ 10
return	ssv6060>:AT+SET_PWM=5,1,0 +OK

9.5. SMART LINK instruction description

9.5.1. Change mode

Instruction	AT+ENABLE_SMARTREBOOT=<type>
parameter	<type> : 0 : NO Smart Link 1 : ICOMM Smart Link 2 : WECHAT 3 : USER
return	N

Shenzhen JIXIAN Technology Co., Ltd.

Note	Need reset to change the mode

9.5.2. Set HF_smart link work mode

Instruction	AT+HFSMTLINK=[start]<CR>
parameter	start : start/off smart link. 0: off , 1: start
return	+OK<CR><LF><CR><LF>
Note	Set HF_smart link work mode. System reset after setting.

9.6. SOFT AP instructions description

9.6.1. Enter AP mode

Instruction	AT+AP
parameter	N
return	[At_AP] : +++

9.6.2. Exit AP mode

Instruction	AT+AP_EXIT
parameter	N
return	[At_AP_EXIT] : +++

9.6.3. Set SSID name in AP mode

Instruction	AT+SET_AP_SSID=<name>
parameter	<name>:SSID
return	<gconfig_set_softap_ssid> new_softap_ssid=ABC <gconfig_set_softap_ssid> i_config.softap_ssid=ABC
example	ssv6060>:AT+SET_AP_SSID=ABC [At_SET_AP_SSID] : +++ <gconfig_set_softap_ssid> new_softap_ssid=ABC

Shenzhen JIXIAN Technology Co., Ltd.

	<gconfig_set_softap_ssid> i_config.softap_ssid=ABC

9.7. RF instructions description

9.7.1. Start RF test mode

Instruction	AT+RADIO_RF_START=<range>
parameter	<range> = 0
return	N
example	AT+RADIO_RF_START=0

9.7.2. SET CHANNEL

Instruction	AT+RADIO_CHANNEL=<range>
parameter	<range> =1~13
return	N
example	AT+RADIO_CHANNEL=12

9.7.3. Wi-Fi PACKET FORMAT

Instruction	AT+RADIO_RF_RATE=<range>
parameter	<range>:0~30
return	N
example	AT+RADIO_RF_RATE=22

9.7.4. G/N MODE GAIN

Instruction	AT+RADIO_RF_GNGAIN= <range>
parameter	<range>:5~15

ShenZhen JIXIAN Technology Co., Ltd.

return	N
example	AT+RADIO_RF_GNGAIN=7

9.7.5. B MODE GAIN

Instruction	AT+RADIO_RF_BGAIN= <range>
parameter	<range>:5~15
return	N
example	AT+RADIO_RF_BGAIN=2

9.7.6. Read IC temperature

Instruction	AT+RADIO_RF_READ_TEMPCS=?
parameter	N
return	temperature ° C Ex: AT+RADIO_RF_READ_TEMPCS=28
example	AT+RADIO_RF_READ_TEMPCS=?

9.7.7. Exit RF test mode

Instruction	AT+RADIO_RF_STOP
parameter	N
return	N
example	AT+RADIO_RF_STOP

9.7.8. Reset

Instruction	AT+REBOOT
parameter	N
return	N

ShenZhen JIXIAN Technology Co., Ltd.

example	AT+REBOOT

9.7.9. Close compensation table

Instruction	AT+RADIO_RF_ENABLE_TCSR=<on/off>
parameter	<on/off>: 0:Off ; 1:On
return	N
example	AT+RADIO_RF_ENABLE_TCSR=0

9.7.10. Frequency offset compensation

Instruction	AT+RADIO_RF_FREQOFFSET=<p range>,<n range>
parameter	<p range>:1~16 <n range>:1~16
return	N
example	AT+RADIO_RF_FREQOFFSET=7,7

9.7.11. List ALL RF compensation

Instruction	AT+RADIO_RF_DUMP
parameter	N
return	List ALL RF compensation Ex: ========== channel = 1 B power = 11 G/N power = 9 Freq. Offset = 2,2 LDO = 4b661c PA1 = 3d5e84ff PA2 = 1457d79 PA3 = fcccce27 Boundary = 0,0 ==========

ShenZhen JIXIAN Technology Co., Ltd.

example	AT+RADIO_RF_DUMP

9.7.12. RF_LDO TUNING

Instruction	AT+RADIO_RF_LDO=<n range>,<m range>
parameter	<n range>:1~8 <m range>:5~8
return	N
example	AT+RADIO_RF_LDO=7,7

9.7.13. RF_ PA1 TUNING

Instruction	AT+RADIO_RF_PA1= <range>
parameter	<range>:6~12
return	N
example	AT+RADIO_RF_PA1=8

9.7.14. RF_ PA2 TUNING

Instruction	AT+RADIO_RF_PA2= <range>
parameter	<range>:1~7
return	N
example	AT+RADIO_RF_PA2=1

9.7.15. RF_ PA3 TUNING

Instruction	AT+RADIO_RF_PA3= <range>
parameter	<range>:7~14
return	N
example	AT+RADIO_RF_PA3=14

Shenzhen JIXIAN Technology Co., Ltd.

9.7.16. RF_ IQ PHASE

Instruction	AT+RADIO_RF_IQPHASE=<range>
parameter	<range>: (-7~7)
return	N
example	AT+RADIO_RF_IQPHASE=0

9.7.17. RF_ IQ AMP

Instruction	AT+RADIO_RF_IQAMP=<range>
parameter	<range>: (-7~7)
return	N
example	AT+RADIO_RF_IQAMP=0

ShenZhen JIXIAN Technology Co., Ltd.

9.8 Label

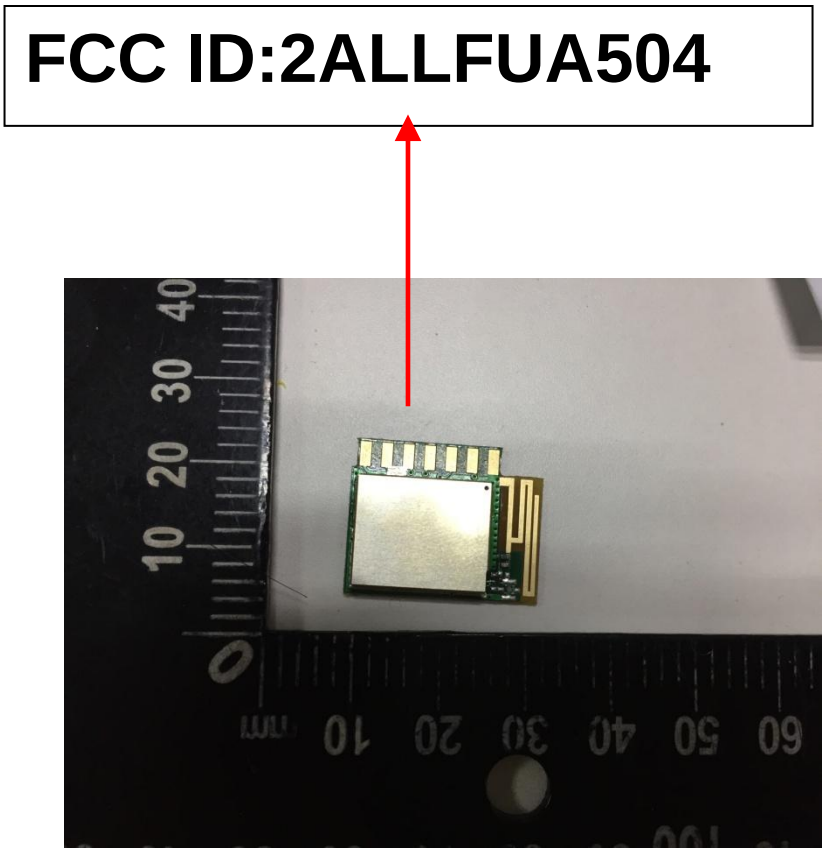

When a host manufacture's using this modular, the label of the host which used this modular need to be contained "Contains Transmitter Module FCC ID: 2ALLFUA504" , the host OEM user manual also need to contain clear instructions on how end users can find the module and the FCC ID: 2ALLFUA504.

FCC Statement

This device complies with part 15 of the FCC Rules. Operation is subject to the following two conditions:

(1) This device may not cause harmful interference, and (2) this device must accept any interference received, including interference that may cause undesired operation.

Any Changes or modifications not expressly approved by the party responsible for compliance could void the user's authority to operate the equipment.

Note: This equipment has been tested and found to comply with the limits for a Class B digital device, pursuant to part 15 of the FCC Rules. These limits are designed to provide reasonable protection

against harmful interference in a residential installation. This equipment generates uses and can radiate radio frequency energy and, if not installed and used in accordance with the instructions, may cause harmful interference to radio communications. However, there is no guarantee that interference will not occur in a particular installation. If this equipment does cause harmful interference to radio or television reception, equipment generates, uses and can radiate radio frequency energy and, if not installed and used in accordance with the instructions, may cause harmful interference to radio communications. However, there is no guarantee that interference will not occur in a particular installation. If this equipment does cause harmful interference to radio or television reception,

—Reorient or relocate the receiving antenna.

—Increase the separation between the equipment and receiver.

—Connect the equipment into an outlet on a circuit different from that to which the receiver is connected.

—Consult the dealer or an experienced radio/TV technician for help.

FCC RF Radiation Exposure Statement

This equipment complies with FCC RF radiation exposure limits set forth for an uncontrolled environment. This equipment should be installed and operated with a minimum distance of 20 centimeters between the radiator and your body.