JT1063 USER'S GUIDE

PARTY LIGHT CDG KARAOKE SYSTEM

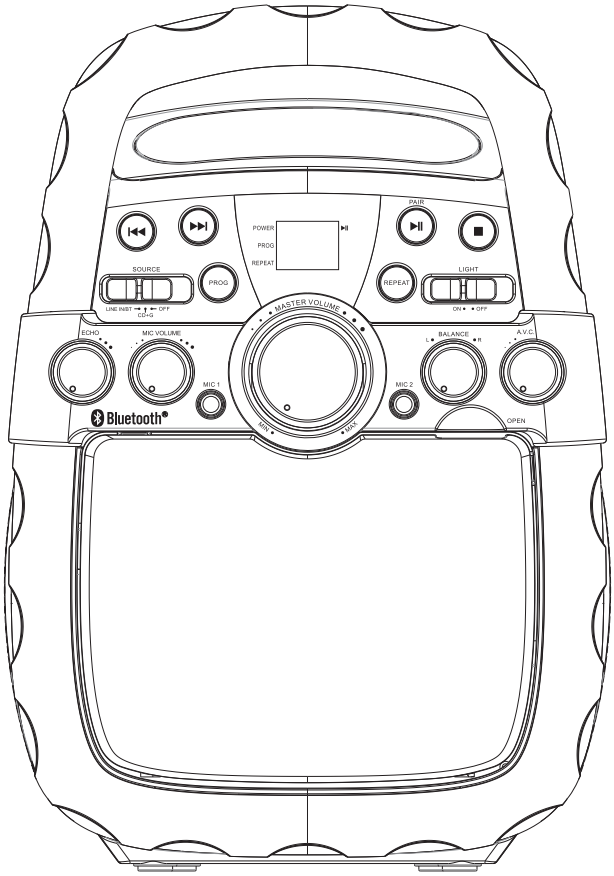

V 1.0

PLEASE READ BEFORE OPERATING THIS EQUIPMENT

Warnings and Precautions

CAUTION: TO PREVENT ELECTRIC SHOCK, MATCH WIDE BLADE OF PLUG TO WIDE SLOT, FULLY INSERT.

WARNING: To reduce the risk of fire or electric shock,do not expose this apparatus to rain or moisture.

AVERTISSEMENMTY: Pour réduire le risque d'incendie ou de choc électrique, ne pas exposer cetappareil sous la pluie et l'humidité.

CAUTION: Use of controls or adjustments or performance of procedures other than those specifed may result in hazardous radiation exposure.

WARNING: Changes or modifications to this unit not expressly approved by the party responsible for compliance could void the user's authority to operate the equipment.

WARNING: Do not place the unit on top of any soft, porous, or sensitive surfaces to avoid damaging the surface. Use a protective barrier between the unit and surface to protect the surface

WARNING: Changes or modifications to this unit not expressly approved by the party responsible for compliance could void the user's authority to operate the equipment.
WARNING: Do not place the unit on top of any soft, porous, or sensitive surfaces to avoid damaging the surface. Use a protective barrier between the unit and surface to protect the surface.

WARNING: Use of this unit near florescent lighting may cause interference regarding use of the remote. If the unit is displaying erratic behavior move away from any florescent lighting, as it may be the cause.

CAUTION: Danger of explosion if battery is incorrectly replaced. Replace only with the same or equivalent type.

PRÉCAUTION: Danger d'explosionsi les piles sontremplacées de façon incorrect. Remplacer les piles seulement par le même type de pile oul'équivalent.

WARNING: There is a danger of explosion if you attempt to charge standard Alkaline batteries in the unit. Only use rechargeable NiMH batteries.

WARNING: The remote control's button cell battery contains mercury. Do not put in the trash, instead recycle or dispose of as hazardous waste.

WARNING: Lithium batteries, like all rechargeable batteries are recyclable and should be recycled or disposed of in normal household waste. Contact your local government for disposal or recycling practices in your area. They should never be incinerated since they might explode.

WARNING: Shock hazard - Do Not Open.
AVIC: RISQUE DE CHOC ÉLECTRIQUE - NE PAS OUVRIR

Mains plug is used as disconnect device and it should remain readily operable during intended use. In order to disconnect the apparatus from the mains completely, the mains plug should be disconnected form the mains socket outlet completely.
La prise du secteur est utilise pour déconnecter le système.
La prise du secteur ne doit pas etre obstrudd ou doit etre facilement accessible pendant son utilisation. Pour
etre completement deconnecte de
l'alimentation d'entree, la prise doit etre debranchee secteur.

CAUTION
RISK OF ELECTRIC SHOCK
DO NOT OPEN

ATTENTION
RISQUE D' LECTROCUTION
NE PAS OUVRIR

WARNING: TO REDUCE THE RISK OF ELECTRIC SHOCK, DO NOT REMOVE COVER (OR BACK). NO USER-SERVICEABLE PARTS INSIDE. REFER SERVICING TO QUALIFIEDSERVICE PERSONNEL.

The lightning fash with arrowhead symbol, within an equilateral triangle, is intended to alert the user to the presence of uninsulated "dangerous voltage" within the product's enclosure that may be of suffcient magnitude to constitute a risk of electric shock to persons.

The exclamation point within an equilateral triangle is intended to alert the user to the presence of important operating and maintenance (servicing) instructions in the literature accompanying the appliance.

This product utilizes a Class 1 laser to read Compact Discs. This laser Compact Disc Player is equipped with safety switches to avoid exposure when the CD door is open and the safety interlocks are defeated. Invisible laser radiation is present when the CD Player's lid is open and the system's interlock has failed or been defeated. It is very important that you avoid direct exposure to the laser beam at all times. Please do not attempt to defeat or by pass the safety switches.

Important Safety Instructions

1. Read these Instructions.
2. Keep these Instructions.
3. Heed all Warnings.
4. Follow all instructions.
5. Do not use this apparatus near water
6. Clean only with a dry cloth.
7. Do not block any ventilation openings. Install in accordance with the manufacturer's instructions.
8. Do not install near any heat sources such as radiators, heat registers, stoves, or other apparatus (including amplifers) that produce heat.
9. Do not defeat the safety purpose of the polarized or grounding - type plug. A polarized plug has two blades with one wider than the other. A grounding type plug has two blades and a third grounding prong. The wide blade or the third prong are provided for your safety. When the provided plug does not ft into your outlet, consult an electrician for replacement of the obsolete outlet.
10. Protect the power cord from being walked on or pinched particularly at plugs, convenience receptacles, and the point where they exit from the apparatus.
11. Only use attachments/accessories specifed by the manufacturer.
12. Use only with a cart, stand, tripod, bracket, or table specifed by the manufacturer, or sold with the apparatus. When a cart is used, use caution when moving the cart/apparatus combination to avoid injury from tip-over.
13. Unplug this apparatus during lightning storms or when unused for long periods of time.
14. Refer all servicing to qualifed service personnel. Servicing is required when the apparatus has been damaged in any way, such as power-supply cord or plug is damaged, liquid has been spilled or objects have fallen into the apparatus, the apparatus has been exposed to rain or moisture, does not operate normally, or has been dropped.

FCC Warnings

NOTE: This equipmenthas beentestedand found to comply or has been dropped.
with the limits for a Class B digital device, pursuant to Part 15 of the FCC Rules. These limits are designed to provide reasonable protection against harmful interference in a residential installation. This equipment generates, uses, and can radiate radio frequency energy and, if not installed and used in accordance with the instructions, may cause harmful interference to radio communications. However, there is no guarantee that interference will not occur in a particular installation. If this equipment does cause harmful interference to radio or television reception, which can be determined by turning the equipment off and on, the user is encouraged to try to correct the interference by one or more of the following measures:

- Reorient or relocate the receiving antenna.
- Increase the separation between the equipment and receiver.
- Connect the equipment into an outlet on a circuit different from that to which the receiver is connected.
- Consult the dealer or an experienced radio/TV technician for help .

Additional Warnings

- The apparatus shall not be exposed to dripping or splashing and that no objects flled with liquids, such as vases, shall be placed on apparatus.

  L'appareil ne doit pas être exposé aux écoulements ou aux éclaboussures et aucun objet ne contenant de liquide, tel qu'un vase, ne doit être placé sur l'objet.

- Main plug is used as disconnect device and it should remain readily operable during intended use. In order to disconnect the apparatus from the mains completely, the mains plug should be disconnected form the mains socket outlet completely.

  La prise du secteur ne doit pas être obstruée ou doit être facilement accessible pendant son utilisation. Pour être complètement déconnecté de l'alimentation d'entrée, la prise doit être débranchée du secteur.

- Battery shall not be exposed to excessive heat such as sunshine, fire or the like.

  Les piles ne doivent pas être exposées à de forte chaleur, tel qu'à la lumière du soleil, au feu ou autres choses de semblable.

- Caution marking is located at the rear or back of the apparatus.

  Attention marquage est situé à l'arrière ou à l'arrière de l'appareil.

- The marking information is located at the rear or back of apparatus.

  Les informations de marquage est situé à l'arrière ou à l'arrière de l'appareil.

Contents

Warnings and Precautions. 1

Important Safety Instructions. 2
Contents. 3
Feature / Included. 4
- Features
- Included

Introduction. 5
Location Controls. 6
Display Indicator Message 6
Setup Power. 7
- Connect Power Adapter
- Battery Operation

Connect Ext. Device & Sound From Main Unit Speaker. 7
- LINE IN (AUX In / AUDIO In)

Using CD+G , CDs. 8
- Loading a Disc
- Playing a Disc
- Repeat Function
- Programming a Disc up to 20 tracks

Connecting Bluetooth to Your Smartphone / Tablet 9
Connecting to a Television / DVD / Ext. Device. 9
- Composite Video Output
- RCA Audio Output

Using Microphones 10
Using AVC and ECHO / BALANCE. 11
- AVC
- ECHO
- BALANCE

Using Light Effect 11
Specification 11

Feature / Included

Feature

- CD player: Plays CD+G, CD, CD-R/RW Discs
- Flashing Lights On The Top and The Handle
- Bluetooth wireless stereo audio streaming
- Support A2DP Profiles for most smart phones / laptops
- Microphone Volume Controls
- Echo Control
- AVC (Auto Voice Control) Control
- Balance Control
- Red LED display
- Microphone Jacks, 6.3mm x2
- Composite video output
- RCA audio output
- Line in jack 3.5mm (Aux input / Audio input)
- Built-in speakers
- Power: Requires AC power adapter or Batteries 6 x UM2

Included

- Party Light CDG Karaoke Unit
- Microphones
- RCA audio/video cable
- AC power adapter
- User Manual

Microphone

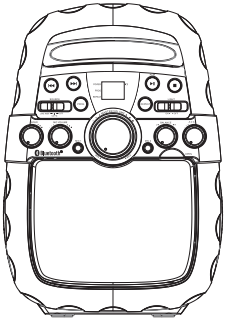

Karaoke System

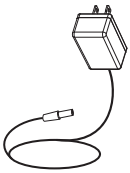

AC Power Adapter

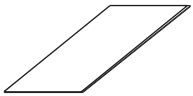

User’s Manual

RCA Audio/Video Cable

FRONT VIEW

Introduction

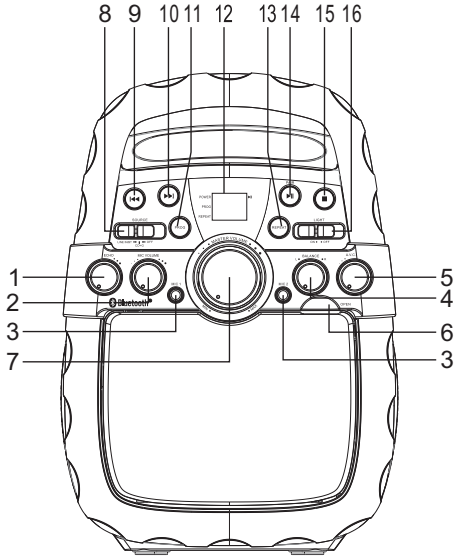

REAR VIEW

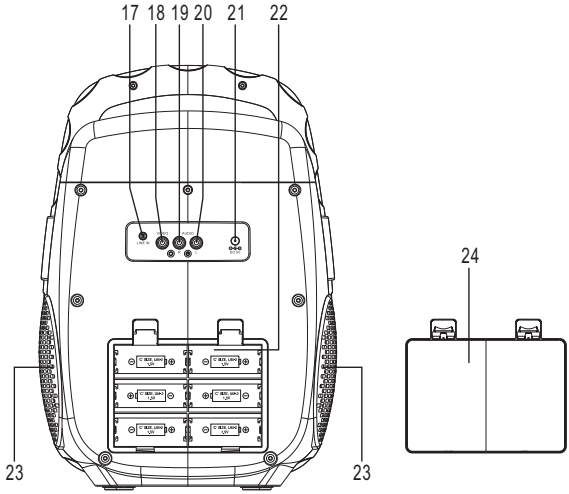

Location Controls

1. **ECHO Dial:** Rotate to adjust echo sound effect.
2. **MIC VOLUME Dial:** Rotate to adjust the volume from the MIC input.
3. **MIC Inputs :**Mic 1 and Mic 2 input jack
4. **BALANCE Dial**: Rotate the dial to select vocals or music only or a standard balance function.
5. **A.V.C Dial:** Turn to adjust the Voice control.
6. **OPEN:** CD door open area. Open the door to install disc
7. **MASTER VOLUME Dial:** Rotate to adjust the main volume sound level.
8. **SOURCE:** Slide to select Line in / BT mode, CD+G(DISC) mode and unit off.
9. **SKIP/SEARCH(Back):** Press to skip previous tracks on loader disc. Press and hold to fast-rewind the current track on a loader disc.
10. **SKIP/SEARCH(Forward):** Press to skip next tracks on loader disc. Press and hold to fast-forward the current track on a loader disc.
11. **PROGRAM Button:** Press to program a loader disc to play tracks in specified order.
12. **DISPLAY:** Show disc tracks number and current operation.
13. **REPEAT Button:** Press repeatedly to set the current track or entire disc to repeat
14. **PLAY / PAUSE / PAIR Button:**
    In CD mode, press to play or pause a loader disc.
    In BT mode, press to connect another BT device.
15. **STOP Button**: Press to stop a disc playing.
16. **LIGHT Switch:** Slide this switch to turn on / off Disco Lights.
17. **LINE IN (Aux in / Audio in):** Connect to external device audio output.
18. **VIDEO OUT Jack:** Connect to TV video input.
19. **AUDIO OUT R (Line out / Aux out) Jack:** Connect to external device audio input R.
20. **AUDIO OUT L (Line out / Aux out) Jack:** Connect to external device audio input L.
21. **DC INPUT Jack:** Connect power adapter for AC power.
22. **BATTERY COMPARTMENT:** Insert six size “C” or UM-2 batteries for DC power.
23. **SPEAKER:**Unit Speaker location.
24. **BATTERY COMPARTMENT COVER**

Display Indicator Message

- **POWER Indicator:** Will be light when unit turn on.
- **PROG (Program) Indicator:** Will be light / flash when program mode turn on.
- **REPEAT Indicator:** Will be flash / light when REPEAT function turn on.
- **PLAY / PAUSE Indicator:** Will be light / flash when disc playing.

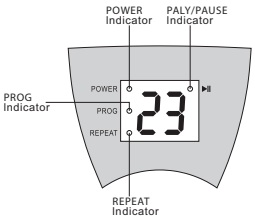

Setup Power

Connect Power Adapter

Plug the included AC adapter into the standard AC power outlet to power the **KARAOKE SYSTEM.** Connect small end to **DC INPUT** jack of main unit. After adapter connection, Slide the **SOURCE** button to **CD+G** mode or **Line in/BT** mode position to turn on the unit."

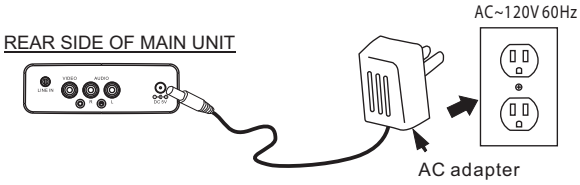

Battery Operation

Before installing batteries (not included),ensure that the unit is disconnected from the mains supply.
Remove the battery compartment cover on the back of the unit by carefully pushing the two lugs left. The battery cover can then be lifted away. Fit the 1.5V (UM2) x 6 pcs batteries (not included), referring to the polarity markings. Finally, replace the cover
For battery operation, remove the adapter from the wall outlet and unplug from the unit.

Warning!

1. *Danger of explosion if batteries are incorrectly replaced.*
2. *Replace batteries with the same equivalent type only.*

Connect Ext. Device & Sound From Main Unit Speaker

LINE IN (AUX In/ AUDIO In)

To connect a MP3 Player or other Audio Device you will need a 3.5mm Auxiliary Cable.

1. Connect a 3.5mm Auxiliary Cable to the **LINE IN** jack at the rear side of unit and to the Audio Output or Phones on the audio device you wish to play.
2. Slide the **SOURCE** selector of the Unit to **LINE IN / BT** position and the **Karaoke System** display will show AU.
3. Make sure your external music player is turned on.

4. Start music playback on your external music player.
5. Adjust **MASTER VOLUME** dial to control the sound level of music playback from the speakers on the unit.

Please note:-*If not use this function, please unplug it.*

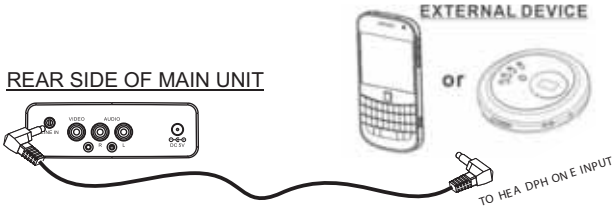

Using CD+G, CDs

Loading a Disc

1. Power on by slide the **SOURCE** Selector to CD+G position.
2. Pull out the **CD DOOR** by **DOOR OPEN AREA**.
3. Load a disc into the compartment with the printed side facing you.
4. Gently close the **CD DOOR.** The **CDG PLAYER** begins to read the disc. The **Display** will display the total number of tracks.
5. Press **PLAY/PAUSE** button to play disc. (If no disc is loaded, "no" will be displayed).

Playing a Disc

1. Follow the instructions for **Loading a Disc.**
2. Press the **PLAY/PAUSE** button to begin playing the loaded disc. The **PLAY/PAUSE** indicator will light.
3. Rotate the **MASTER VOLUME** dial to select the sound level.
4. To temporarily stop playing, press the **PLAY/PAUSE** button once (**PAUSE** indicator will light and flash). To resume play, press the **PLAY/PAUSE** button one more.
5. Press **SKIP/SEARCH** buttons to skip between next or previous tracks.
6. Hold the **SKIP/SEARCH** buttons to fast search through the track.x
   Please note:-*The fast-forward / fast-rewind functions will not work for CDG discs.*
7. Connect the **VIDEO OUT** jack to TV, the lyrics text will show on TV.
8. Press the **STOP** button to stop playing.

Repeat Function

1. Follow the instructions for Loading a Disc and Playing a Disc.
2. When disc installed, press the **REPEAT** button once and the **REPEAT** indicator flash. The unit will play the current track repeatedly.

3. When disc installed, press the **REPEAT** button twice and **REPEAT** indicator will be light. The unit will play the entire disc repeatedly.
4. To cancel the repeat function: press the **REPEAT** button repeatedly the **REPEAT** indicator light off or press the **STOP** button twice to stop.

Programming a Disc up to 20 tracks

1. When disc playing, press the **STOP** button to stop mode.
2. Press the **PROGRAM** button and the **PROG** indicator will light.
3. Press the **SKIP / SEARCH** buttons to forward or back to select a desired track number.
4. Press the **PROGRAM** button to confirm.
5. Repeat steps 3 and 4 to program to play in a specified order.
6. Press the **PLAY/PAUSE** button to start the program playing.
7. Press the **STOP** button twice to cancel a program.

Connecting Bluetooth to Your Smartphone / Tablet

1. Slide the **SOURCE** button to **LINE IN/BT** position to connect your external Bluetooth device and the display will show **bt** and flash.
2. Set the Bluetooth function of your external device to ON and begin searching for devices.
   Note: The effective distance between your external device and this apparatus is 10 meters (30 feet).
3. Once "**JT1063**" appears on the paired device list of your external device, select it.
   Notes: If cannot connect, press ***PAIR*** button to reconnect again.
4. If you are asked for a password, enter "0000"
5. When both devices are successfully connected an audible chime will sound and the display will show **bt** and stop flash, now you are ready to play music wirelessly from your device.
6. Press the **PLAY** button of external Bluetooth device to start music playback.
7. Press the **NEXT / PREV** of the unit or external Bluetooth device to switch between music tracks.
   Note: After initial pairing, the unit will stay paired unless unpaired manually by the user or erased due to a reset of the device. If your device should become unpaired of your find it is unable to connect, repeat the above steps or press & hold the ***PAIR*** button again.

Connecting to a Television / DVD / Ext. Device

Composite Video output

Require an **RCA** video cable.

1. Plug the included RCA audio/video cable into the **VIDEO OUT** and a composite video input on a television.
2. Adjust the television to the correct input setting.
3. When playing **CDG** discs, the **Karaoke System** will output written lyrics to the connected television

RCA Audio Output

Requires an **RCA** audio cable.

1. Plug the included RCA audio/video cable into the **AUDIO OUT** and a **RCA** audio input on a television or stereo system.
2. Adjust the television or stereo system to the correct input setting.
3. When playing the disc, the **Karaoke System** will output audio to the connected television or stereo system. Use the external device to control the output sound level.

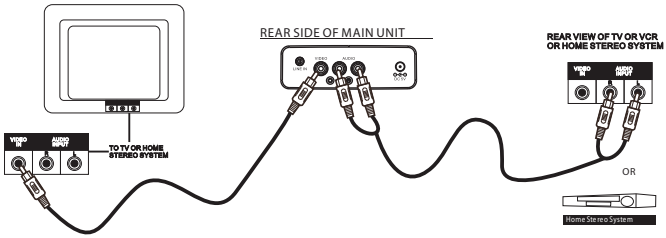

Using Microphone

Requires a microphone (included)

1. Plug the microphone (see below figure) into the **MIC 1 INPUT** or **MIC 2 INPUT.**
2. Slide the **ON /OFF** switch of **MICROPHONE,**
3. Use the **MIC VOLUME** dial of **Karaoke System** to adjust the volume of audio sound from the microphone.

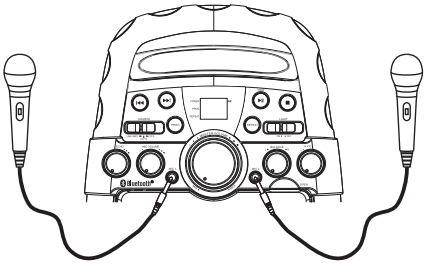

Using AVC / ECHO / BALANCE

AVC

Rotate the AVC (Automatic Voice Control) dial to on if you want the original singer's voice to stop while you are singing. The original singer voice will resume immediately when you pause.

ECHO

Adjust the **ECHO** dial of **Karaoke System** to enhance your voice for a concert hall effect.

BALANCE

Rotate the **BALANCE** dial of **Karaoke System** to hear the music and vocals or to hear the music only.

Notes: To use the **BALANCE** dial, a CD+G disc must be used. Otherwise it will operate as a standard **BALANCE** control.

Using Light Effect

When the LIGHT switch setting to ON position. The light effects turn on and the HANDLE will be light on.

Specification

AC Power Adapter Connect DC Jack	**Use included adapter** **AC~ Input 100-240 50/60 Hz , DC Output 5V, 1200mA**
CD Player	Support CDs and CDG disc 4.75 / 3.25 inch
Master Power Output	**1.5W x 2RMS**
Loud Speakers Spec	**3 Inch,3 Watt , 4 Ohm**

Specifications are typical, individual units might vary. They are subject to continuous improvement without notice and without incurring any obligation.

This device complies with Part 15 of the FCC rules. Operation is subject to the following two conditions: 1) this device may not cause harmful interference, and 2) this device must accept any interference received, including interference that may cause undesired operation.

Changes or modifications not expressly approved by the party responsible for compliance could void the user's authority to operate the equipment.

This device complies with Industry Canada’s licence-exempt RSSs. Operation is subject to the following two conditions:
(1) This device may not cause interference; and
(2) This device must accept any interference, including interference that may cause undesired operation of the device.
Cet appareil est conforme aux CNR exemptes de licence d'Industrie Canada . Son fonctionnement est soumis aux deux conditions suivantes :
(1) Ce dispositif ne peut causer d'interférences ; et
(2) Ce dispositif doit accepter toute interférence , y compris les interférences qui peuvent causer un mauvais fonctionnement de l'appareil.