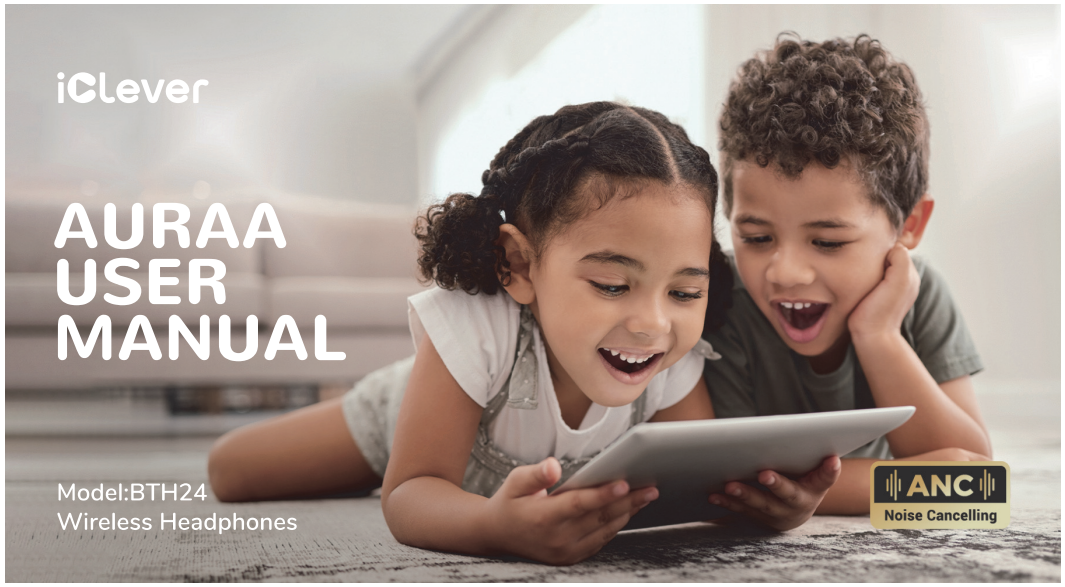

Amzon's Leading Kids Headphones Brand

5
Million+:
5 million+ products sold worldwide

50
Well-known Evaluation Media Reports:
reported by many well-known media and KOL

118
Countries:
available in 118 countries

iClever is recommended by many authority media as the best kids headphones including **CNET, Tech Advisor, Android Police, CGM, Parents, The Bump** etc.Built with our patented Safe-Volume Technology, which protects children's hearing with volume limiter while providing crisp, clear sound. We're protected millions of children from hearing damage while helping millions of parents rest easy knowing their children are safe.

The fifth generation of Safe Volume Technology innovation and upgrade

- The first generation 85dB: refers to a single frequency point
- The second generation 85dBA (Laeq/pink noise): The spectral intensity of the entire sound, and then superimposed the A-weighting correction curve, the average value obtained
- The third generation of iClever Sound Refiner technology the sound that is likely to cause hearing impairment (2kHz-4kHz sound waves) is attenuated by 5-10 decibels, effectively protecting high-frequency hearing loss while taking into account the clarity of the earphones
- The fourth generation circuit control: 85dBA volume control can be realized for any equipment
- The fifth generation decibel meter: the sound decibel level is displayed on the screen

Safe material

BPA FREE

RoHS

CPC

Professional acoustic adjustment

iClever has acoustic engineers serving first-line audio brands to ensure that each product meets its acoustic standards

Craftsmanship spirit, detail by detail

- foldable
- colorful lighting
- stretchable
- sturdy material
- cat ear series stickers

Package Contents

1 x 3.5mm Audio Cable

1 x Type-C Charging Cable

User Manual

1 x User Manual

ECO Friendly sticker

1x Cloth Pouch

Wireless Headphones

BTH22

BTH27

BTH12

BTH18

Wired Headphones

IC-HS14

IC-HS19

IC-HS26

IC-HS22

Classroom Headphones

IC-HS21

IC-HS14

IC-HS27

IC-HS28

Cat Ear Headphones

Meow Lollipop

Meow Donut

Meow Cookie

Meow Macaron

Noise Cancelling Headphones

BTH26

Auraa

BTH20

Safety Earmuffs

IC-EM01

FOCUS

Open-Ear Headphones

OWS01

The above products belong to iClever brand series products

Product Diagram

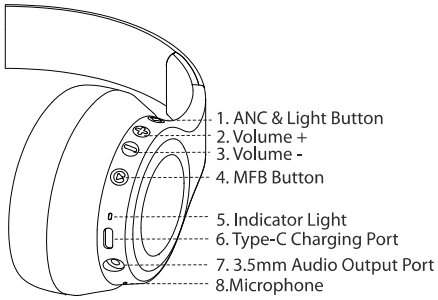

● Single machine ▬ Long press X:times

	Key Symbols	Operate	Light	Prompt sound
ON		▬ 2S		Hello,iClever
OFF		▬ 4S		Power off
ANC ON		● 1X	/	Noise cancelling on
ANC OFF		● 1X	/	Noise cancelling off
		●● 2X	/	/
		●● 2X	/	/
+		● 1X	/	Maximum volum (reach this status prompt)
		▬ 2S	/	/
−		● 1X	/	Minimum volum (reach this status prompt)
		▬ 2S	/	/
		● 1X	10s	do
		● 1X	10s	do

DE

1.ANC- und Lichttaste
2. Lautstärke+
3. Lautstärke-
4. Multifunktionstaste
5. Anzeigelampe
6. Typ-C-Anschluss
7. 3,5-mm-Audioausgangsanschluss
8. Mikrofon

FR

1.Bouton ANC et lumière
2.Bouton Volume +
3.Bouton Volume -
4.Bouton multifonction
5.Voyant lumineux
6.Port de type C
7.Port de sortie audio 3,5 mm
8.Microphone

ES

1.Botón de cancelación de ruido y luz
2.botón volumen +
3.botón de volumen -
4.botón multifunción
5.luz indicadora
6.puerto de carga tipo C
7.puerto de salida de audio de 3,5 mm
8.micrófono

IT

1.Pulsante ANC e luce
2.Pulsante Volume +
3.Pulsante Volume -
4.Pulsante multifunzione
5.Indicatore luminoso
6.Porta di tipo C
7.Porta di uscita audio da 3,5 mm
8.Microfono

CN

1. ANC 降噪&灯光键
2. 音量+键
3. 音量-键
4. 多功能键
5. 指示灯
6. Type-C充电接口
7. 3.5mm音频输出端口
8. 麦克风

Bluetooth Pairing

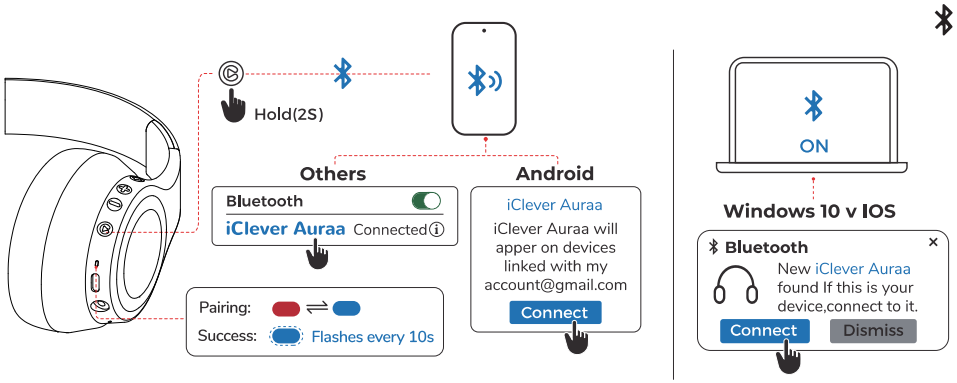

Wired Connection

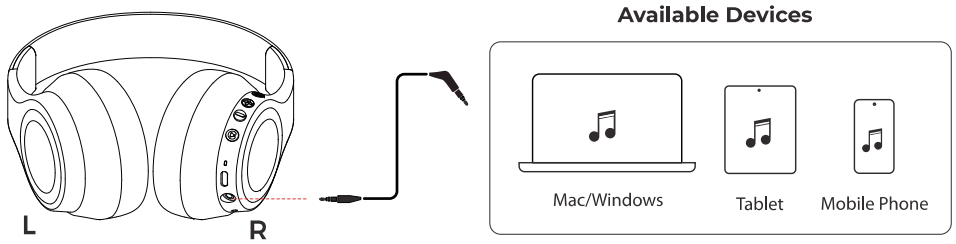

ANC Usage Guide

EN

When the headphone is powered on:

1. The default is noise reduction mode, no wired or Bluetooth connection, and it will automatically shut down after 4 hours of use;

2. Turn off the default noise reduction mode, and it will automatically shut down if it is not connected to Bluetooth for 5 minutes;

When the headphone is not powered on:

3. Through a wired connection, you need to manually turn on the noise reduction mode;

When not in use, please remember to manually shut down;

DE

Wenn der Kopfhörer eingeschaltet ist:

1. Standardmäßig ist der Geräuschunterdrückungsmodus aktiviert. Es besteht keine Kabel- oder Bluetooth-Verbindung. Nach 4 Stunden Nutzung schaltet er sich automatisch ab.

2. Deaktivieren Sie den standardmäßigen Geräuschunterdrückungsmodus. Er schaltet sich automatisch ab, wenn 5 Minuten lang keine Bluetooth-Verbindung besteht.

Wenn der Kopfhörer nicht eingeschaltet ist:

3. Bei einer Kabelverbindung müssen Sie den Geräuschunterdrückungsmodus manuell aktivieren.

Denken Sie daran, den Kopfhörer bei Nichtgebrauch manuell abzuschalten.

FR

Lorsque le casque est allumé :

1. Le mode de réduction du bruit est activé par défaut, sans connexion filaire ni Bluetooth. Il s'éteint automatiquement après 4 heures d'utilisation.

2. Désactivez le mode de réduction du bruit par défaut. Il s'éteint automatiquement après 5 minutes d'inactivité.

Lorsque le casque est éteint :

3. Via une connexion filaire, vous devez activer manuellement le mode de réduction du bruit.

Lorsque vous ne l'utilisez pas, n'oubliez pas de l'éteindre manuellement.

ES

Al encender los auriculares:

1. El modo de reducción de ruido está activado por defecto, sin conexión por cable ni Bluetooth, y se apagará automáticamente después de 4 horas de uso.

2. Desactive el modo de reducción de ruido por defecto; se apagará automáticamente si no se conecta por Bluetooth durante 5 minutos.

Al apagar los auriculares:

3. Si utiliza una conexión por cable, active manualmente el modo de reducción de ruido.

Cuando no los utilice, recuerde apagarlos manualmente.

IT

Quando le cuffie sono accese:

1. L'impostazione predefinita è la modalità di riduzione del rumore, senza connessione cablata o Bluetooth, e si spegneranno automaticamente dopo 4 ore di utilizzo;

2. Disattivare la modalità di riduzione del rumore predefinita e le cuffie si spegneranno automaticamente se non sono connesse al Bluetooth per 5 minuti;

Quando le cuffie non sono accese:

3. Tramite una connessione cablata, è necessario attivare manualmente la modalità di riduzione del rumore;

Quando non in uso, ricordarsi di spegnerle manualmente;

CN

在耳机开机状态下：

1. 默认为降噪模式，不进行有线和蓝牙连接，使用4h后会自动关机；

2. 关闭默认的降噪模式，5分钟不连接蓝牙会自动关机；

在耳机未开机状态下：

3. 通过有线连接，需要手动开启降噪模式；

在不使用时，请记得手动关机；

Specifications

Frequency Range: 2.402-2.48 GHz
Maximum Transmission Power: 8dBm
Battery Type: Lithium Polymer Battery
Battery Parameters: 3.7Vdc 500mAh
Charging Parameters: DC 5V 1A

DE

Frequenzbereich: 2,402-2,48 GHz
Maximale Sendeleistung: 8dBm
Akku-Typ: Lithium-Polymer-Akku
Akku-Parameter: 3.7Vdc 500mAh
Auflade-Parameter: DC 5V 1A

FR

Gamme de fréquence : 2.402-2.48 GHz
Puissance de transmission maximale : 8dBm
Type de batterie : Batterie au lithium polymère
Paramètres de la batterie : 3.7Vdc 500mAh
Paramètres de charge : DC 5V 1A

ES

Rango de frecuencia: 2,402-2,48 GHz
Potencia máxima de transmisión: 8dBm
Tipo de batería: Batería de polímero de litio
Configuración de la batería: 3,7 V CC, 500 mAh
Configuración de carga: CC, 5 V, 1 A

IT

Gamma di frequenza: 2,402-2,48 GHz
Potenza Massima Di Trasmissione: 8dBm
Tipo di batteria: batteria ai polimeri di litio
Parametri della batteria: 3.7Vdc 500mAh
Parametri di ricarica: DC 5V 1A

CN

频率范围：2.402-2.48 GHz
最大传输功率：8 dBm
电池类型：聚合物锂离子电池
电池参数：3.7Vdc 500mAh
充电参数：DC 5V 1A

FCC Statement

Changes or modifications not expressly approved by the party responsible for compliance could void the user's authority to operate the equipment.
This equipment has been tested and found to comply with the limits for a Class B digital device, pursuant to Part 15 of the FCC Rules. These limits are designed to provide reasonable protection against harmful interference in a residential installation. This equipment generates uses and can radiate radio frequency energy and, if not installed and used in accordance with the instructions, may cause harmful interference to radio communications. However, there is no guarantee that interference will not occur in a particular installation. If this equipment does cause harmful interference to radio or television reception, which can be determined by turning the equipment off and on, the user is encouraged to try to correct the interference by one or more of the following measures:
-- Reorient or relocate the receiving antenna.
-- Increase the separation between the equipment and receiver.
-- Connect the equipment into an outlet on a circuit different from that to which the receiver is connected.
-- Consult the dealer or an experienced radio/TV technician for help.

This device complies with part 15 of the FCC rules. Operation is subject to the following two conditions
(1) This device may not cause harmful interference.
(2) This device must accept any interference received, including interference that may cause undesired operation.
The device has been evaluated to meet general RF exposure requirement. The device can be used in portable exposure condition without restriction.

How to Charge

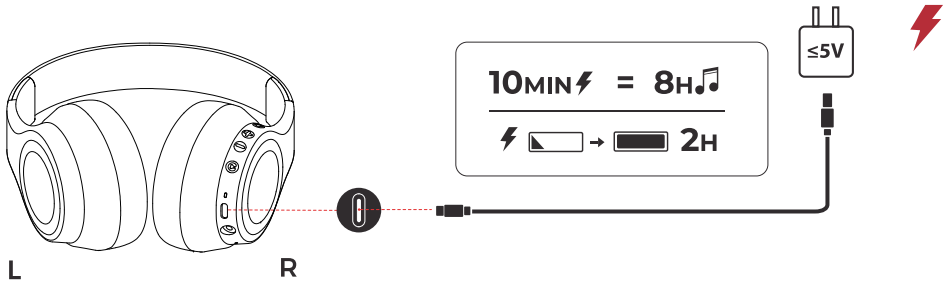

Warnings

1.Stop using the product if it is damaged.
2.Replace the USB interface of the charging cable, if it becomes hot.
3.Keep away the product from high temperatures and open flames.

DE
1. Benutzen Sie das Produkt nicht mehr, wenn es beschädigt ist.
2. Tauschen Sie die USB-Schnittstelle des Ladekabels aus, wenn sie heiß wird.
3. Halten Sie das Produkt von hohen Temperaturen und offenen Flammen fern.

FR
1. Cessez d'utiliser le produit s'il est endommagé.
2. Remplacez l'interface USB du câble de chargement si elle devient chaude.
3. Gardez le produit à l'écart des températures élevées et des flammes libres.

ES
1. Deje de usar el producto si está dañado.
2. Reemplace la interfaz USB del cable de carga si se calienta.
3. Mantenga el producto alejado de altas temperaturas y llamas abiertas.

IT
1. Smettere di usare il prodotto se è danneggiato.
2. Sostituire l'interfaccia USB del cavo di ricarica se si surriscalda.3. Tenere il prodotto lontano da temperature elevate e fiamme libere.

CN
1. 若产品损坏，请停止使用。
2. 当充电线 USB 接口发热，请及时更换。
3. 远离高温和火源。

Bluetooth Sharing

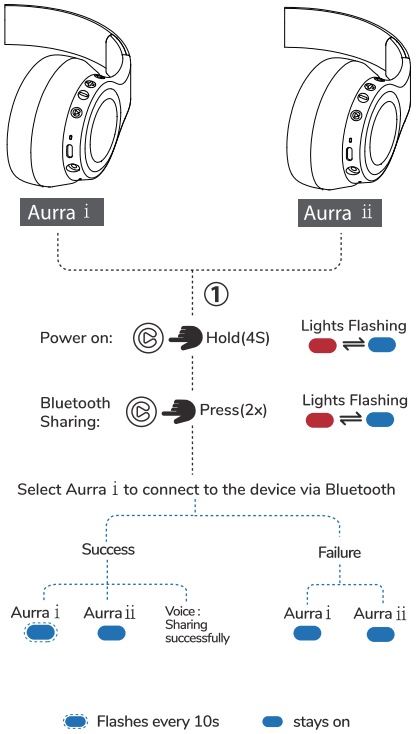

EN

Note: The headphone not connected to the mobile phone cannot control the volume increase or decrease, but the noise reduction function and lighting can be controlled separately. To protect user privacy, during the call, only the headphone connected to the mobile phone can hear the call sound.

DE

Hinweis: Die Lautstärke lässt sich mit dem nicht verbundenen Kopfhörer nicht regeln. Die Geräuschunterdrückung und die Beleuchtung lassen sich jedoch separat steuern. Zum Schutz der Privatsphäre ist während eines Anrufs nur der mit dem Mobiltelefon verbundene Kopfhörer hörbar.

FR

Remarque : Le casque non connecté au téléphone portable ne permet pas de contrôler l'augmentation ou la diminution du volume, mais la réduction du bruit et l'éclairage peuvent être contrôlés séparément. Pour protéger la vie privée de l'utilisateur, seul le casque connecté au téléphone portable peut entendre le son de l'appel.

ES

Nota: Los auriculares no conectados al teléfono móvil no pueden controlar el volumen, pero la reducción de ruido y la iluminación se pueden controlar por separado. Para proteger la privacidad del usuario, durante la llamada, solo se escuchará el sonido de la llamada a través del auricular conectado al teléfono móvil.

IT

Nota: le cuffie non connesse al telefono cellulare non possono controllare l'aumento o la diminuzione del volume, ma la funzione di riduzione del rumore e l'illuminazione possono essere controllate separatamente. Per proteggere la privacy dell'utente, durante una chiamata, solo le cuffie connesse al telefono cellulare possono sentire l'audio della chiamata.

CN

备注：未与手机连接的耳机不能控制音量加减，可以单独控制降噪功能和灯光。为保护用户隐私，接听电话期间，只有与手机连接的耳机 才能听到电话声。

EN
The power delivered by the charger must be between min 0.05 Watts required by the radio equipment, and max 2 Watts in order to achieve the maximum charging speed.
DE
Die vom Ladegerät gelieferte Leistung muss zwischen mindestens 0.05 Watt und maximal 2 Watt liegen, um die maximale Ladegeschwindigkeit zu erreichen.
FR
La puissance délivrée par le chargeur doit être comprise entre le minimum de 0.05 watts requis par l'équipement radio et le maximum de 2 watts afin d'atteindre la vitesse de charge maximale.

ES
La potencia entregada por el cargador debe estar entre un mínimo de 0.05 Watts requerido por el equipo de radio y un máximo de 2 Watts para lograr la máxima velocidad de carga.
IT
La potenza erogata dal caricabatterie deve essere compresa tra minimo 0.05 Watt richiesti dall'apparecchiatura radio e massimo 2 Watt per raggiungere la massima velocità di ricarica.
CN
充电器提供的功率必须是无线电所需的最小 0.05 瓦之间设备，最大2瓦，
以实现最大充电速度。

EN
Power consumption in off mode:0.0050W
DE
Stromverbrauch im Aus-Zustand:0.0050W
FR
Consommation électrique en mode arrêt:0.0050W
ES
Consumo de energía en modo apagado:0.0050W
IT
Consumo energetico in modalità off:0.0050W

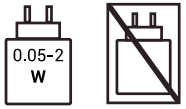

Statements of Compliance

Product Model: BTH24
Name and Address of manufacture:Thousandshores Deutschland GmbH,Sorbenstraße 22, 20537 Hamburg, DE
Name and Address of Authorised Representative:APEX CE SPECIALISTS LIMITED, 89 Princess Street, Manchester, M14HT,UK
The statement of compliance is prepared by or on behalf of the manufacturer of the product.
In the opinion of the manufacturer, they have complied with either—(i)the applicable security requirements in Schedule 1 of SI 2023 No. 1007
Provision 5.1-1 of ETSI EN 303 645 & provision 5.1-2 of ETSI EN 303 645;
Provision 5.2-1 of ETSI EN 303 645;
Provision 5.3-13 of ETSI EN 303 645.
The defined support period for the product： 202506
signature, name and function of the signatory:
The place and date of issue:

Zhi Liu
Senior Vice President
04/02/2025

iClever

Auraa

Active Noise Cancelling Headphones

DOC

EN

Hereby, Thousandshores Deutschland GmbH declares that the radio equipment type Wireless Headphones iClever BTH24 is in compliance with Directive 2014/53/EU. The full text of the EU declaration conformity is available at the following internet address:
Http://files.iclever.com/BTH24-EU-DOC.pdf

DE

Hiermit erklärt Thousandshores Deutschland GmbH, dass der Funkanlagentyp Wireless Headphones iClever BTH24 der Richtlinie 2014/53/ EU entspricht. Der vollständige Text der EU Konformitätserklärung ist unter der folgenden Internetadresse verfügbar.
Http://files.iclever.com/BTH24-DE-DOCpdf

UK

Learn more about the UK Declaration of Conformity, Please click below link to download.
Http://files.iclever.com/BTH24-UK-DOC.pdf

www.iclever.com
support@iclever.com

Instagram @icleverkids

YouTube @iCleverKids

Facebook @icleverkids