Shenzhen Ruiketong QianyeTechnology Co.,Ltd.

4th Floor, Factory 10, Xiaweiyuan Industrial Zone, Gushu Community, Xixiang Street,
Bao'an District, Shenzhen, China

Client Name :

Product TYPE : A11 Wireless Charging and Transmitting Coil for Phone

Model NO: G43.5*Inner hole*0.8Double-slot with hole reverse
Adhesive thread length 30MM/0.15*28

Product Code:

Client Item NO:

Engineering NO:

Date : 3rd July,2024

For Engineering Department Only	
Revised Content	Date of approval

Prepared By	Checked By	Approved By
WANJIMEI	WANJIMEI	LIUCHENGZHAO

Authorized Signature Company Chop		
Engineering	QC Approved	Date of approval

Shenzhen Ruiketong QianyeTechnology Co.,Ltd.

4th Floor, Factory 10, Xiaweiyuan Industrial Zone, Gushu Community, Xixiang Street, Bao'an District, Shenzhen, China

1.Winding Procedure:

NO	Winding	Wire gauge	QTY of turns In each coil	Direction	Remarks
1	N1	2UEW-B-0.15*28P	10TS	CCW	
2					

2.FEATURES:

1.Test conditions：25°C,65%RH@100KHz/1V

1.1 Inductance

1.11 L0A(coil+magnetic sheet)=6.3uH±5%

1.2 Q value=70MIN

1.3 DCR：50mΩ MAX

1.4 Operating Temperature：-25℃~85℃

2.Test instrument：L:CHUANGDA 1068+1310; DCR:502BC ;SIZE: Callipers

3.Material list

N O	PROJECT	MATERIAL
1	WIRE	¢ 0.15*28 2UEW-
2	FERRITE	43.5*8*0.8L type double-groove perforated ferrite hard magnetic back double-sided adhesive
3	GLUE	Water-based White Glue
4	SOLDER	HQ-996/JS-996
5	Tin	QIANDAO Pure Tin
6	High temperature adhesive	8MM high temperature adhesive tape
7		
8		

3 .CIRCUIT DIAGRA

Shenzhen Ruiketong QianyeTechnology Co.,Ltd.

4th Floor, Factory 10, Xiaweiyuan Industrial Zone, Gushu Community, Xixiang Street,
Bao'an District, Shenzhen, China

Unit： MM

4.OUTSIDE DIAGRA

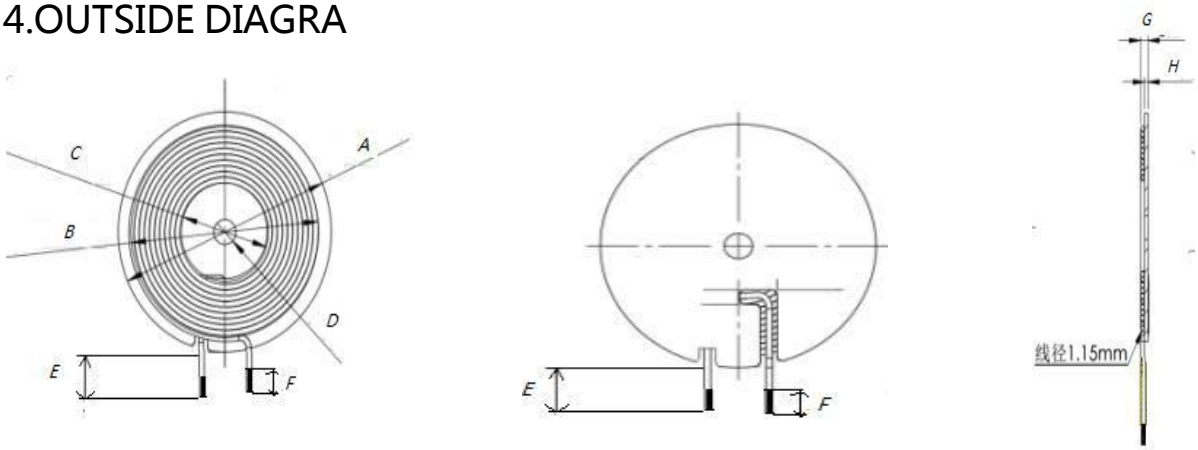

Remark: Coillead-outposition winding 5MM (ref) High temperature adhesive , the back of magnetic sheet with double-sidedgum.

Standard	A	B	C	D	E	F	G	
STD	43.5±0.5	40±0.5	20.5±0.2	5±0.2	40±2	3±1	2.0±0.3	

We statement that All measurements were performed radiated and therefore additional antenna gain documentation is not required.

5.PACKAGE

5.1 包装图片 Packing pictures:

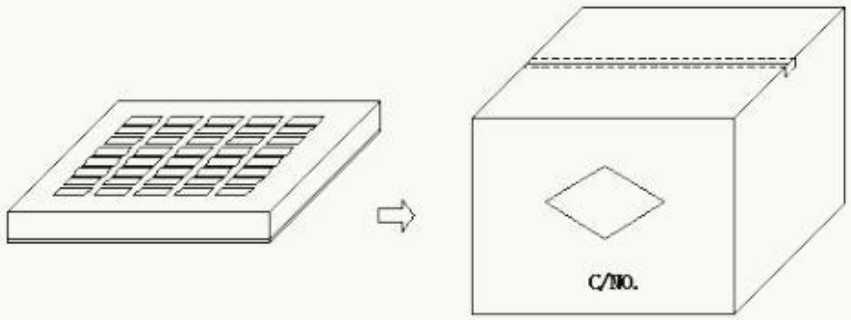

5.2 包装数量及规格 Packing Quantity:

项目 Item	数量 Quantity	材料规格 Material
盒 Box	350 Pcs	345*330*50 mm
箱 Big Carton	1750 Pcs	360*340*280 mm

5.3 *The packaging is based on the existing packaging tray and the actual shipping packaging, and can be customized if there are special requirements*.

6.Storage and Use condition

6.1 Storage condition

6.1.1 Suggested storage conditions: T=-25℃~ 85℃, humidity 70% (max.)

Recommended keeping conditions:T=-25℃ ~ 85℃, 70% RH (max.).

6.1.2 Storage Dealine : Within six months from being produced.

6.2 Use condition

Use restrictive conditions: T=-25℃~85℃, RH≤ 90%.

Shenzhen Ruiketong QianyeTechnology Co.,Ltd.

4th Floor, Factory 10, Xiaweiyuan Industrial Zone, Gushu Community, Xixiang Street, Bao'an District, Shenzhen, China

Client Name:

Product Type: A28 wireless charging and transmitting for Earbuds

Model NO : G43.5*0.6 Double-slot perforated reverse adhesive thread length 210MM/0.07*100

Product Code:

Client Item NO:

Engineering NO:

Date : 3rd July,2024

For Engineering Department Only	
Revised Content	Date of approval

Prepared By	Checked By	Approved By
WANJIMEI	WANJIMEI	LIUCHENGZHAO

Authorized Signature Company Chop		
Engineering	QC Approved	Date of approval

Shenzhen Ruiketong QianyeTechnology Co.,Ltd.

4th Floor, Factory 10, Xiaweiyuan Industrial Zone, Gushu Community, Xixiang Street, Bao'an District, Shenzhen, China

Winding Procedure:

NO	Winding	Wired gauge	QTY of turns In each coil	Direction	Remarks
1	N1	2UEW-B-0.07*100	10TS	CCW	
2					

FEATURES:

1.Test conditions：25°C,65%RH@100KHz/1V

1.1 Inductance

1.11 L0A(coil+magnetic sheet)=6.3uH±5%

1.2 Q value=80MIN

1.3 DCR：40mΩ MAX

1.4 Operating Temperature：-25℃~85℃

2.Test instrument：**L:CHUANGDA** 1068+1310;**DCR:**502BC;**SIZE:** Callipers

3. Materials list

N O	PROJECT	MATERIAL
1	WIRE	¢ 0.07*100 2UEW-
2	FERRITE	43.5*0.6L type double-groove perforated ferrite hard magnetic back double-sided adhesive
3	GLUE	Water-based White Glue
4	SOLDER	HQ-996/JS-996
5	Tin	QIANDAO pure tin
6	High temperature adhesive	8MM high temperature adhesive tape
7		
8		

CIRCUIT DIAGRAM

Shenzhen Ruiketong QianyeTechnology Co.,Ltd.

4th Floor, Factory 10, Xiaweiyuan Industrial Zone, Gushu Community, Xixiang Street, Bao'an District, Shenzhen, China

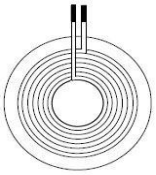

Unit： MM

OUTSIDE DIAGRA

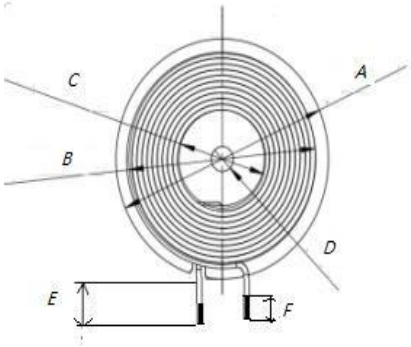

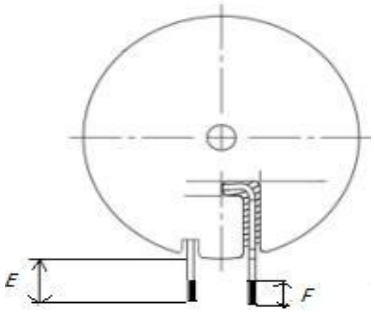

Note: 8MM(ref) high-temperature adhesive tape is wound around the wire outlet of the coil, and double-sided adhesive is attached to the back of the magnetic sheet.

Standard	A	B	C	D	E	F	G	
STD	43.5±0.5	40±0.5	20.5±0.2	5±0.2	210±2	3±1	2.0±0.3	

Unit： MM

We statement that All measurements were performed radiated and therefore additional antenna gain documentation is not required.

PACKAGE

5.1 包装图片 Packing pictures:

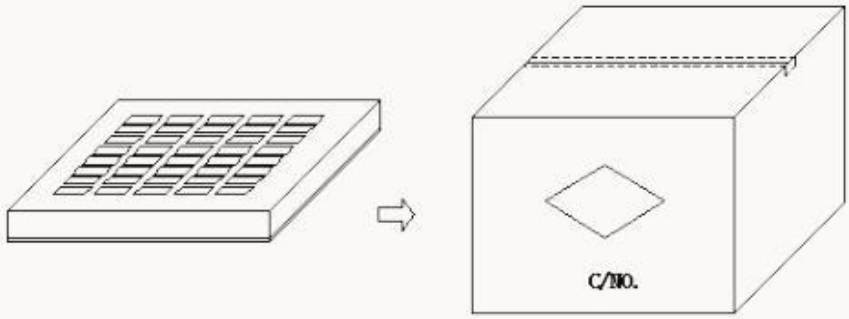

5.2 包装数量及规格 Packing Quantity:

项目 Item	数量 Quantity	材料规格 Material
盒 Box	350 Pcs	345*330*50 mm
箱 Big Carton	1750 Pcs	360*340*280 mm

5.3 The packaging is based on the existing packaging tray and the actual shipping packaging, and can be customized if there are special requirements.

6.Storage and Use condition

6.1 Storage condition

6.1.1 Suggested storage conditions:T=-25℃~ 85℃, humidity 70% (max.)

Recommended keeping conditions:T=-25℃ ~ 85℃, 70% RH (max.).

6.1.2 Storage Dealine : Within six months from being produced

6.2 Use condition

Use restrictive conditions : T=-25℃~85℃, RH≤ 90%.

Shenzhen Ruiketong QianyeTechnology Co.,Ltd.

4th Floor, Factory 10, Xiaweiyuan Industrial Zone, Gushu Community, Xixiang Street,
Bao'an District, Shenzhen, China

SPECIFICATION

Client Name : _____

Product Type : CL1 wireless charging and transmitting for Watch

Model NO: XYDG2502

Date of sample delivery : 5th August , 2024

Supplier :

Drawing By	Examine and verify	Approval By

Client Confirmed :

Pass	Not Pass	Confirmation
Remarks		

Tel:_____

Fax:_____

Client Name	Client Item NO.	Production NO.	Version	Date
		XYDG2502		2024.08.05

Shenzhen Ruiketong QianyeTechnology Co.,Ltd.

4th Floor, Factory 10, Xiaweiyuan Industrial Zone, Gushu Community, Xixiang Street, Bao'an District, Shenzhen, China

1.Plane Structure Diagram: Unit: MM

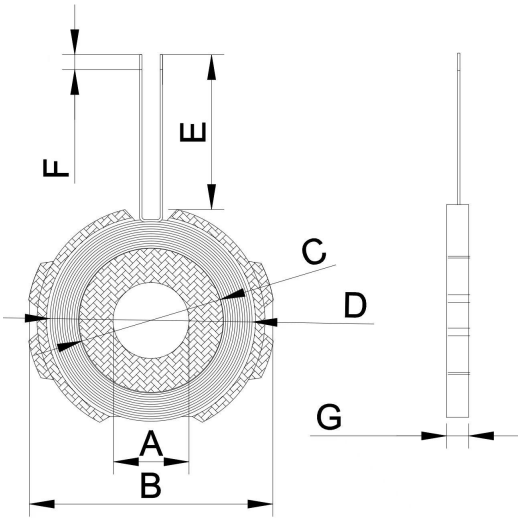

1.1 SCHEMATIC DIAGRAM

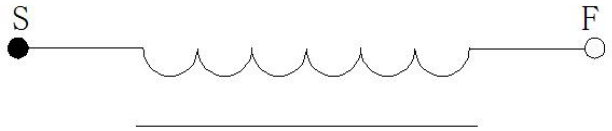

A	7.5±0.5mm
B	25±0.5mm
C	14±0.5mm
D	20.5±0.5mm
E	10±1mm
F	3±1mm
G	2.4±0.5mm

Remark:
1. Coil parallel lead-out
2.Glued with adhesive on the back of the magnetic sheet

We statement that All measurements were performed radiated and therefore additional antenna gain documentation is not required.

2. Winding Specification:

Pin-out	Wire diameter	QTY of turns In each coil	Remarks
1 -- 2	0.08*24P	1211	Hot air stranded wire

3. The technical requirements:

3.1 Fix the thread head and tail to prevent the thread from loosening and breaking.

3.2 According to customer's requirements, cut the excessively long thread ends and plate them with tin, and the depth of tin plating shall be 1.5 0.5 mm.

3.3 Put proper white glue on the hard magnetic disk and attach the coil, and make sure that the surface of the product is clean and tidy during the process.

3.4 Additional process (according to customer requirements) : Install 7.5x2.0mm magnet in the middle of the finished product round hole and in the finished product back with 23.5mm round double-sided foam, ear length 4mm, then back packing.

4. Electrical parameters:

4.1.Inductance， Q value：

PIN 1 — 2 = 6.4uH ±0.3UH

Q value≥27

The above inductance values are based on same as 2817B instrument. Take 100KHZ/0.3Vrms as the standard or equivalent instrument.

Q value is based on same as 2817B instrument and 100KHZ/0.3Vrms as standard or equivalent instrument.

5 .Materials list:

NO	NAME	MATERIAL	SUPPLIER	REMARKS
1	hot air stranded wire	0.08X24P		
2	magnetism piece	88 hard substrate		
3	tin	High temperature resistant environmental protection		
4	white glue	BY882		
5	strong magnet	7.50*2.0 (>3000GS)		Additional procedures, customer requirements
6	double-sided foam adhesive	diameter 23.5mm		ear length:4mm

Address: _____