Test Laboratory: BTL Inc. Date: 6/2/2017

## System Check_B2450

**DUT: Dipole 2450 MHz D2450V2;**

Communication System: UID 0, CW (0); Frequency: 2450 MHz; Duty Cycle: 1:1
Medium parameters used: f = 2450 MHz; $\sigma$ = 1.973 S/m; $\varepsilon_r$ = 53.183; $\rho$ = 1000 kg/m$^3$
Ambient Temperature：22.4 ℃; Liquid Temperature：22.2 ℃

DASY Configuration:

- Probe: EX3DV4 - SN7369; ConvF(7.56, 7.56, 7.56); Calibrated: 8/31/2016;
- Sensor-Surface: 2mm (Mechanical Surface Detection), z = 1.0, 31.0
- Electronics: DAE4 Sn1486; Calibrated: 8/23/2016
- Phantom: ELI V5.0 (20deg probe tilt); Type: QD OVA 002 AA; Serial: 1240
- DASY52 52.8.8(1258); SEMCAD X 14.6.10(7373)

**Area Scan (9x9x1):** Measurement grid: dx=12mm, dy=12mm
Maximum value of SAR (measured) = 18.3 W/kg

**Zoom Scan (7x7x7)/Cube 0:** Measurement grid: dx=5mm, dy=5mm, dz=5mm
Reference Value = 96.98 V/m; Power Drift = 0.02 dB
Peak SAR (extrapolated) = 25.4 W/kg
**SAR(1 g) = 12.2 W/kg; SAR(10 g) = 5.63 W/kg**
Maximum value of SAR (measured) = 18.7 W/kg

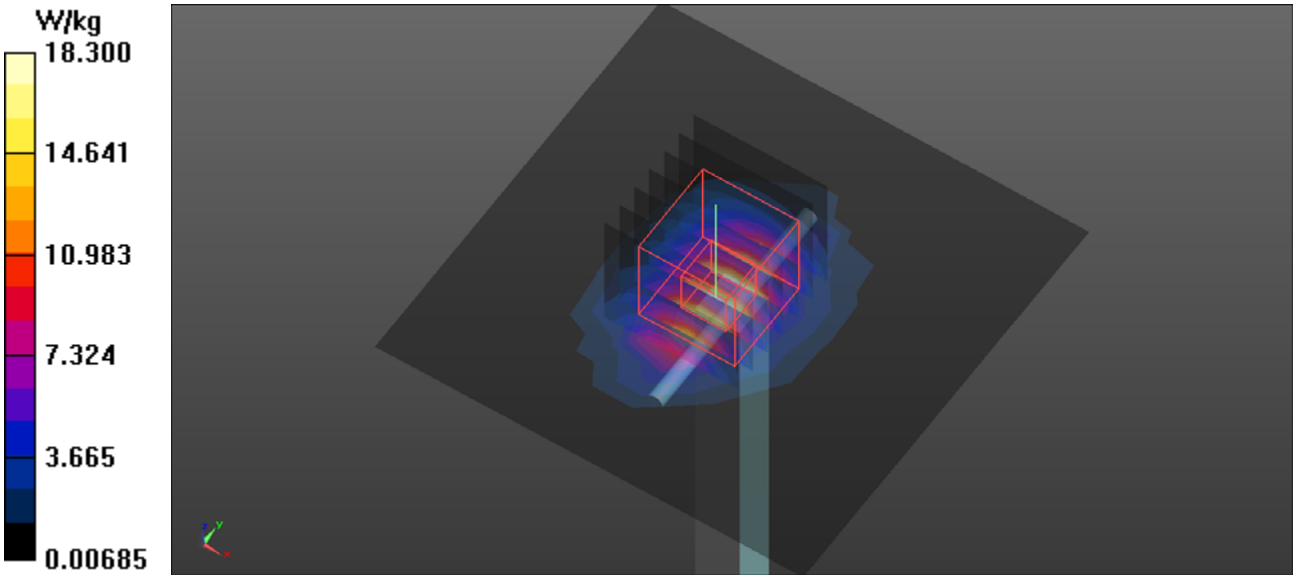

Test Laboratory: BTL Inc. Date: 5/31/2017

## System Check_B5200

**DUT: Dipole D5GHzV2;**

Communication System: UID 0, CW (0); Frequency: 5200 MHz; Duty Cycle: 1:1
Medium parameters used: f = 5200 MHz; $\sigma$ = 5.34 S/m; $\varepsilon_r$ = 47.596; $\rho$ = 1000 kg/m$^3$
Ambient Temperature：22.5 ℃; Liquid Temperature：22.2 ℃

DASY Configuration:

- Probe: EX3DV4 - SN7369; ConvF(4.68, 4.68, 4.68); Calibrated: 8/31/2016;
- Sensor-Surface: 2mm (Mechanical Surface Detection), z = 1.0, 23.0
- Electronics: DAE4 Sn1486; Calibrated: 8/23/2016
- Phantom: ELI V5.0 (20deg probe tilt); Type: QD OVA 002 AA; Serial: 1240
- DASY52 52.8.8(1258); SEMCAD X 14.6.10(7373)

**Area Scan (10x10x1):** Measurement grid: dx=10mm, dy=10mm
Maximum value of SAR (measured) = 10.8 W/kg

**Zoom Scan (7x7x12)/Cube 0:** Measurement grid: dx=4mm, dy=4mm, dz=2mm
Reference Value = 56.39 V/m; Power Drift = 0.01 dB
Peak SAR (extrapolated) = 27.0 W/kg
**SAR(1 g) = 7.17 W/kg; SAR(10 g) = 2.04 W/kg**
Maximum value of SAR (measured) = 14.8 W/kg

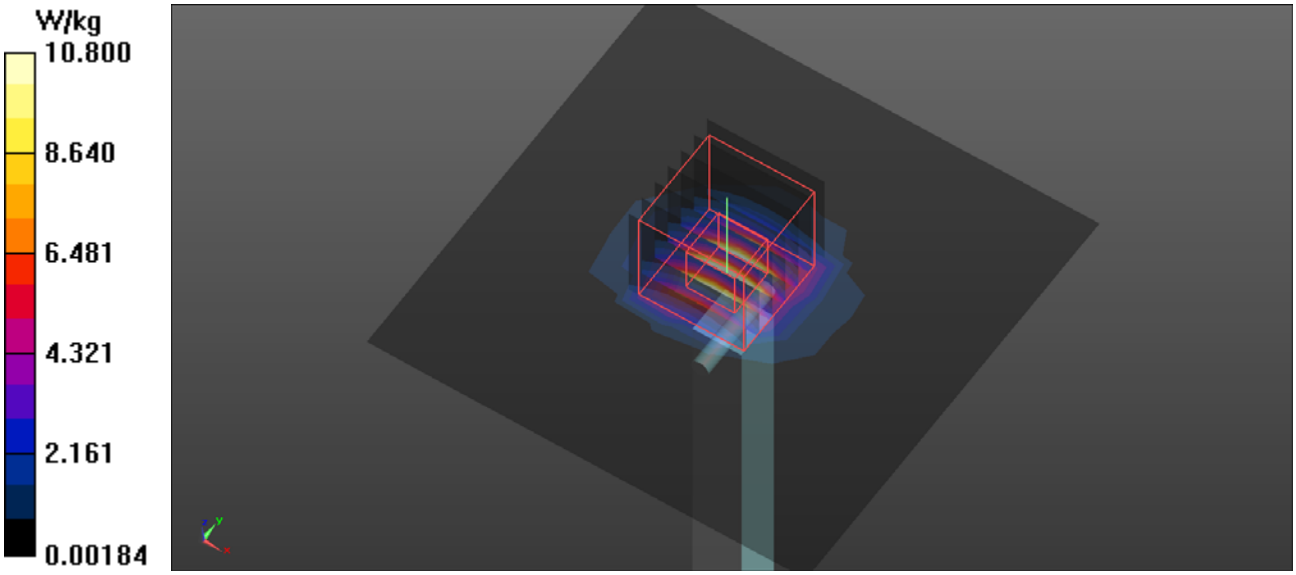

Test Laboratory: BTL Inc. Date: 5/31/2017

## System Check_B5300

**DUT: Dipole D5GHzV2;**

Communication System: UID 0, CW (0); Frequency: 5300 MHz; Duty Cycle: 1:1
Medium parameters used: f = 5300 MHz; $\sigma$ = 5.488 S/m; $\varepsilon_r$ = 47.447; $\rho$ = 1000 kg/m$^3$
Ambient Temperature：22.5 ℃; Liquid Temperature：22.3 ℃

DASY Configuration:

- Probe: EX3DV4 - SN7369; ConvF(4.51, 4.51, 4.51); Calibrated: 8/31/2016;
- Sensor-Surface: 2mm (Mechanical Surface Detection), z = 1.0, 23.0
- Electronics: DAE4 Sn1486; Calibrated: 8/23/2016
- Phantom: ELI V5.0 (20deg probe tilt); Type: QD OVA 002 AA; Serial: 1240
- DASY52 52.8.8(1258); SEMCAD X 14.6.10(7373)

**Area Scan (10x10x1):** Measurement grid: dx=10mm, dy=10mm
Maximum value of SAR (measured) = 10.8 W/kg

**Zoom Scan (7x7x12)/Cube 0:** Measurement grid: dx=4mm, dy=4mm, dz=2mm
Reference Value = 56.85 V/m; Power Drift = 0.08 dB
Peak SAR (extrapolated) = 29.4 W/kg
**SAR(1 g) = 7.33 W/kg; SAR(10 g) = 2.06 W/kg**
Maximum value of SAR (measured) = 15.3 W/kg

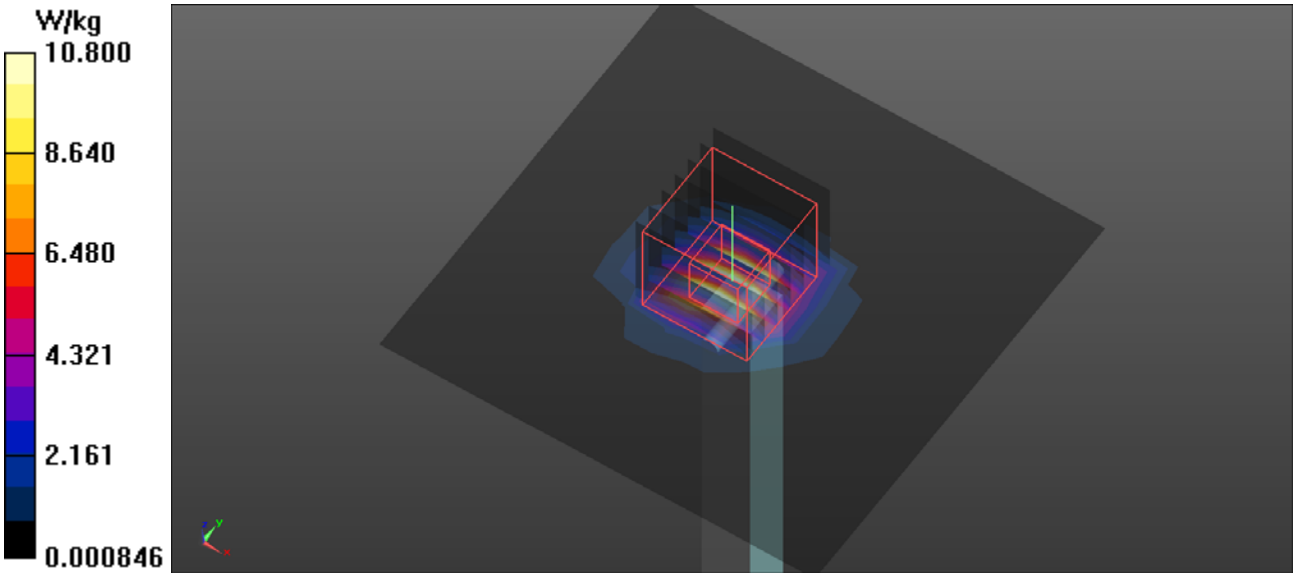

Test Laboratory: BTL Inc. Date: 7/28/2017

## System Check_B5300_170728

**DUT: Dipole D5GHzV2;**

Communication System: UID 0, CW (0); Frequency: 5300 MHz; Duty Cycle: 1:1
Medium parameters used: f = 5300 MHz; $\sigma$ = 5.468 S/m; $\varepsilon_r$ = 47.734; $\rho$ = 1000 kg/m$^3$
Ambient Temperature：22.2 ℃; Liquid Temperature：21.8 ℃

DASY Configuration:

- Probe: EX3DV4 - SN7369; ConvF(4.51, 4.51, 4.51); Calibrated: 8/31/2016;
- Sensor-Surface: 2mm (Mechanical Surface Detection), z = 1.0, 23.0
- Electronics: DAE4 Sn1486; Calibrated: 8/23/2016
- Phantom: ELI V5.0 (20deg probe tilt); Type: QD OVA 002 AA; Serial: 1240
- DASY52 52.8.8(1258); SEMCAD X 14.6.10(7373)

**Area Scan (10x10x1):** Measurement grid: dx=10mm, dy=10mm
Maximum value of SAR (measured) = 14.4 W/kg

**Zoom Scan (7x7x12)/Cube 0:** Measurement grid: dx=4mm, dy=4mm, dz=2mm
Reference Value = 58.08 V/m; Power Drift = -0.03 dB
Peak SAR (extrapolated) = 34.6 W/kg
**SAR(1 g) = 8.18 W/kg; SAR(10 g) = 2.38 W/kg**
Maximum value of SAR (measured) = 17.8 W/kg

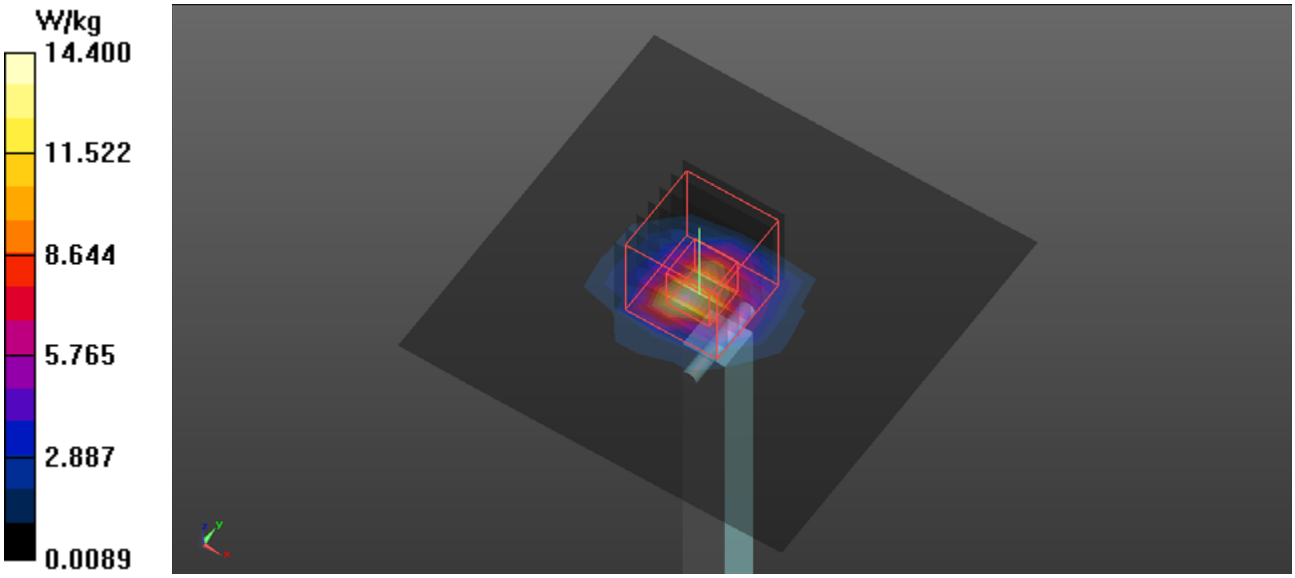

Test Laboratory: BTL Inc. Date: 6/1/2017

## System Check_B5600

**DUT: Dipole D5GHzV2;**

Communication System: UID 0, CW (0); Frequency: 5600 MHz; Duty Cycle: 1:1
Medium parameters used: f = 5600 MHz; $\sigma$ = 5.885 S/m; $\varepsilon_r$ = 46.751; $\rho$ = 1000 kg/m$^3$
Ambient Temperature：22.4 ℃; Liquid Temperature：22.3 ℃

DASY Configuration:

- Probe: EX3DV4 - SN7369; ConvF(3.79, 3.79, 3.79); Calibrated: 8/31/2016;
- Sensor-Surface: 2mm (Mechanical Surface Detection), z = 1.0, 23.0
- Electronics: DAE4 Sn1486; Calibrated: 8/23/2016
- Phantom: ELI V5.0 (20deg probe tilt); Type: QD OVA 002 AA; Serial: 1240
- DASY52 52.8.8(1258); SEMCAD X 14.6.10(7373)

**Area Scan (10x10x1):** Measurement grid: dx=10mm, dy=10mm
Maximum value of SAR (measured) = 8.75 W/kg

**Zoom Scan (7x7x12)/Cube 0:** Measurement grid: dx=4mm, dy=4mm, dz=2mm
Reference Value = 56.11 V/m; Power Drift = 0.09 dB
Peak SAR (extrapolated) = 34.0 W/kg
**SAR(1 g) = 7.51 W/kg; SAR(10 g) = 2.07 W/kg**
Maximum value of SAR (measured) = 16.2 W/kg

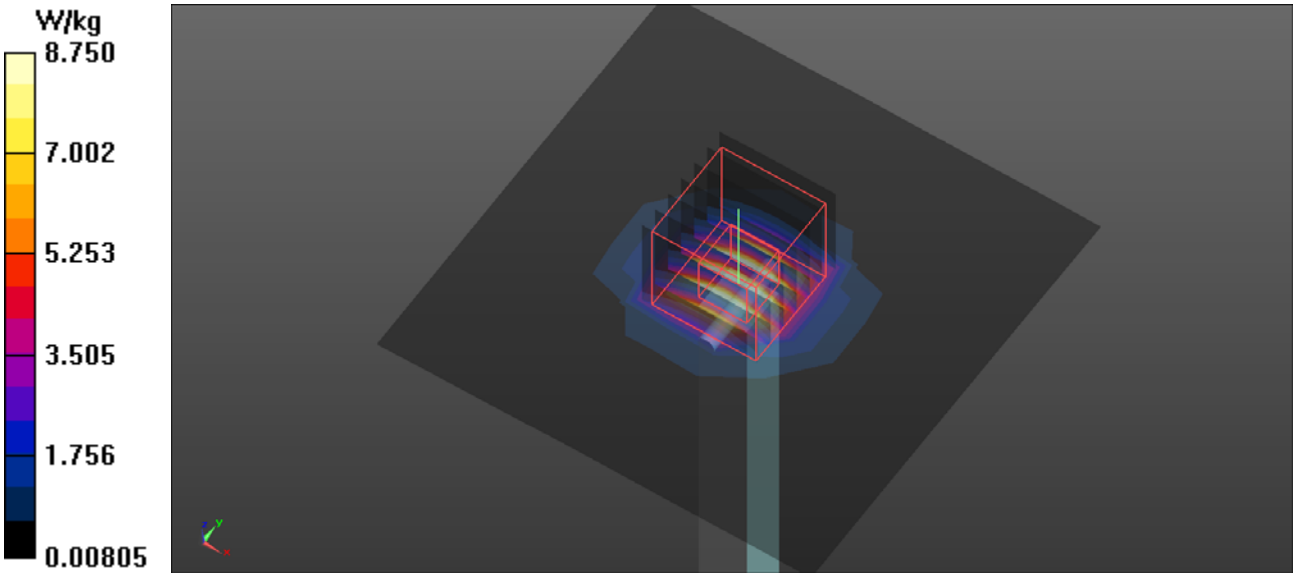

Test Laboratory: BTL Inc. Date: 7/28/2017

## System Check_B5600_170728

**DUT: Dipole D5GHzV2;**

Communication System: UID 0, CW (0); Frequency: 5600 MHz; Duty Cycle: 1:1
Medium parameters used: f = 5600 MHz; $\sigma$ = 5.92 S/m; $\varepsilon_r$ = 46.9; $\rho$ = 1000 kg/m$^3$
Ambient Temperature：22.2 ℃; Liquid Temperature：21.8 ℃

DASY Configuration:

- Probe: EX3DV4 - SN7369; ConvF(3.79, 3.79, 3.79); Calibrated: 8/31/2016;
- Sensor-Surface: 2mm (Mechanical Surface Detection), z = 1.0, 21.0
- Electronics: DAE4 Sn1486; Calibrated: 8/23/2016
- Phantom: ELI V5.0 (20deg probe tilt); Type: QD OVA 002 AA; Serial: 1240
- DASY52 52.8.8(1258); SEMCAD X 14.6.10(7373)

**Area Scan (91x91x1):** Interpolated grid: dx=1.000 mm, dy=1.000 mm
Maximum value of SAR (interpolated) = 17.5 W/kg

**Zoom Scan (7x7x11)/Cube 0:** Measurement grid: dx=4mm, dy=4mm, dz=2mm
Reference Value = 60.14 V/m; Power Drift = -0.04 dB
Peak SAR (extrapolated) = 34.3 W/kg
**SAR(1 g) = 8.69 W/kg; SAR(10 g) = 2.43 W/kg**
Maximum value of SAR (measured) = 18.6 W/kg

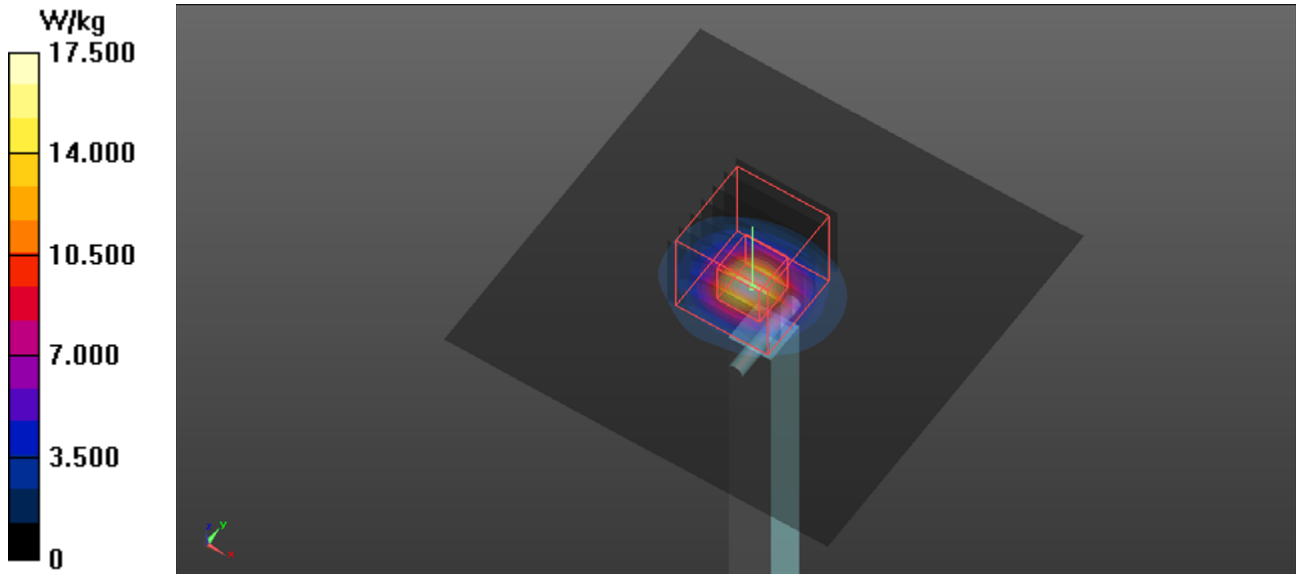

Test Laboratory: BTL Inc. Date: 6/1/2017

## System Check_B5800

**DUT: Dipole D5GHzV2;**

Communication System: UID 0, CW (0); Frequency: 5800 MHz; Duty Cycle: 1:1
Medium parameters used: f = 5800 MHz; $\sigma$ = 6.163 S/m; $\varepsilon_r$ = 46.419; $\rho$ = 1000 kg/m$^3$
Ambient Temperature：22.4 ℃; Liquid Temperature：22.3 ℃

DASY Configuration:

- Probe: EX3DV4 - SN7369; ConvF(4, 4, 4); Calibrated: 8/31/2016;
- Sensor-Surface: 2mm (Mechanical Surface Detection), z = 1.0, 23.0
- Electronics: DAE4 Sn1486; Calibrated: 8/23/2016
- Phantom: ELI V5.0 (20deg probe tilt); Type: QD OVA 002 AA; Serial: 1240
- DASY52 52.8.8(1258); SEMCAD X 14.6.10(7373)

**Area Scan (10x10x1):** Measurement grid: dx=10mm, dy=10mm
Maximum value of SAR (measured) = 11.7 W/kg

**Zoom Scan (7x7x12)/Cube 0:** Measurement grid: dx=4mm, dy=4mm, dz=2mm
Reference Value = 56.99 V/m; Power Drift = 0.10 dB
Peak SAR (extrapolated) = 32.6 W/kg
**SAR(1 g) = 7.92 W/kg; SAR(10 g) = 2.25 W/kg**
Maximum value of SAR (measured) = 17.1 W/kg

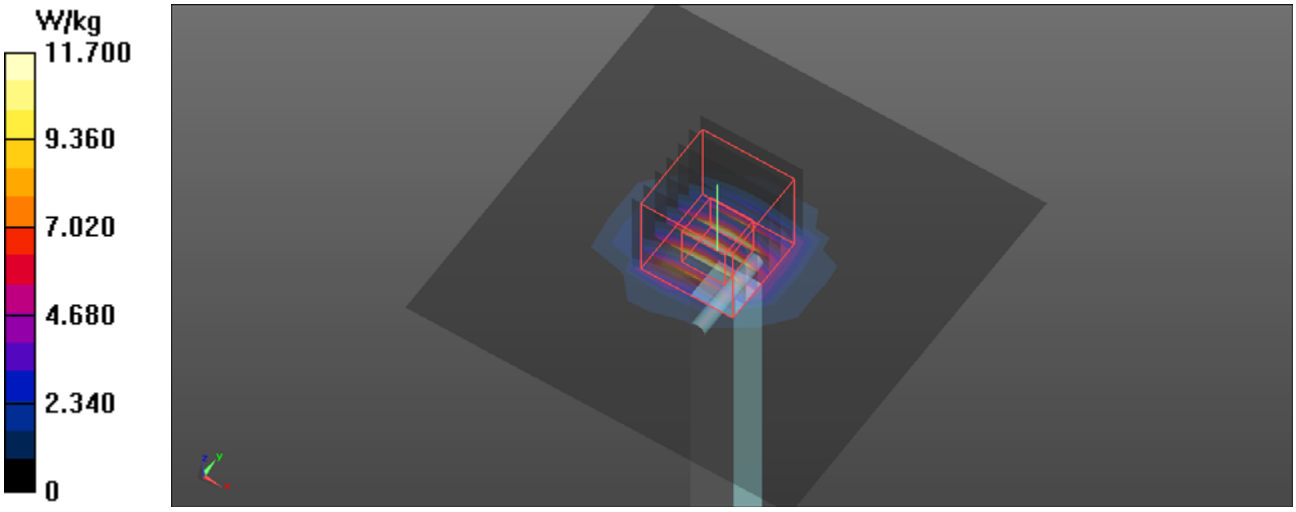

Test Laboratory: BTL Inc. Date: 7/28/2017

## System Check_B5800_170728

**DUT: Dipole D5GHzV2;**

Communication System: UID 0, CW (0); Frequency: 5800 MHz; Duty Cycle: 1:1
Medium parameters used: f = 5800 MHz; $\sigma$ = 6.209 S/m; $\varepsilon_r$ = 46.515; $\rho$ = 1000 kg/m$^3$
Ambient Temperature：22.2 ℃; Liquid Temperature：21.8 ℃

DASY Configuration:

- Probe: EX3DV4 - SN7369; ConvF(4, 4, 4); Calibrated: 8/31/2016;
- Sensor-Surface: 2mm (Mechanical Surface Detection), z = 1.0, 21.0
- Electronics: DAE4 Sn1486; Calibrated: 8/23/2016
- Phantom: ELI V5.0 (20deg probe tilt); Type: QD OVA 002 AA; Serial: 1240
- DASY52 52.8.8(1258); SEMCAD X 14.6.10(7373)

**Area Scan (10x10x1):** Measurement grid: dx=10mm, dy=10mm
Maximum value of SAR (measured) = 12.4 W/kg
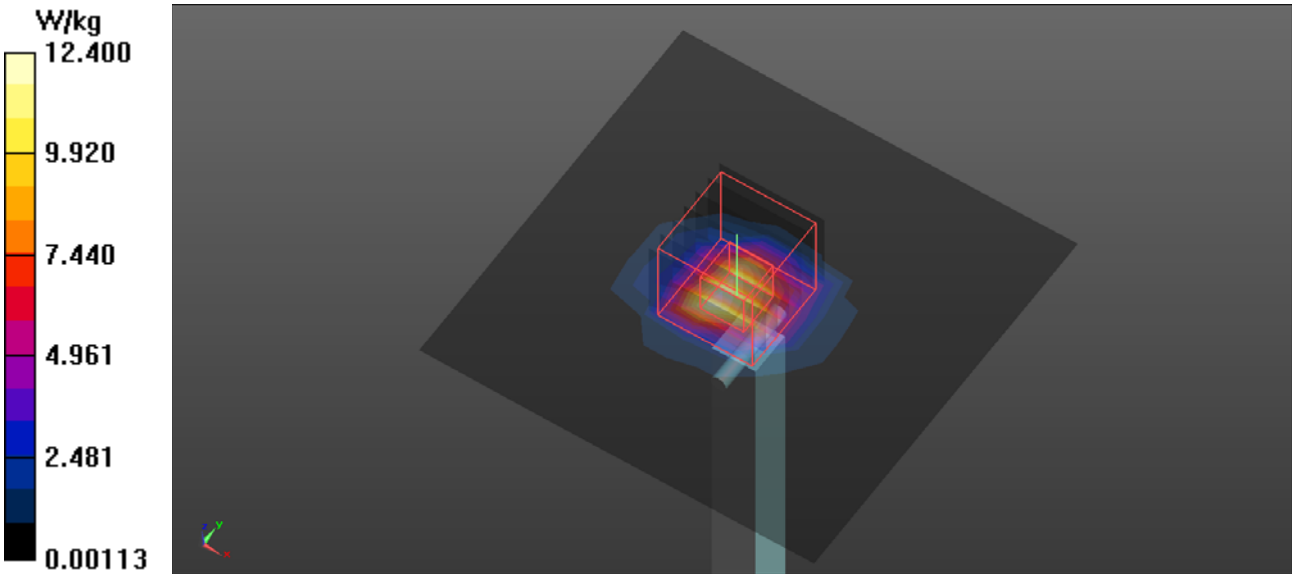
**Zoom Scan (7x7x11)/Cube 0:** Measurement grid: dx=4mm, dy=4mm, dz=2mm
Reference Value = 56.61 V/m; Power Drift = -0.04 dB
Peak SAR (extrapolated) = 32.3 W/kg
**SAR(1 g) = 7.87 W/kg; SAR(10 g) = 2.21 W/kg**
Maximum value of SAR (measured) = 17.0 W/kg