LoRa Module Private Protocol Version

F8L10C-03

User Manual

V1.0.0

This manual is applicable to the following products: F8L10C-03LU, F8L10C-03LN, F8L10C-03HU, F8L10C-03HN

Xiamen Four-Faith Communication Technology Co., Ltd.

https://www.fourfaith.com

Document Revision History

Date	Version	Description	Author
2026-03-31	V1.0.0	Initial Version	HZP

Add：11/F, Building A06, Phase III, Xiamen Software Park, Jimei District, Xiamen, China
http：//www.fourfaith.com Tel：400-8838-199 Fax：0592-5912735

Copyright Notice

All materials or content contained in this document are protected by copyright law, and all copyrights are owned by Xiamen Four-Faith Communication Technology Co., Ltd., except where otherwise stated with referenced content from other parties. Without prior written permission from Four-Faith, no part of this document may be reproduced, distributed, reprinted, linked, transmitted, or used for any commercial purpose in any form. However, downloading or printing for non-commercial personal use is permitted, provided that the content is not modified and all copyright and proprietary notices are retained.

Trademark Notice

Four-Faith、四信、 、 、 are registered trademarks of Xiamen Four-Faith Communication Technology Co., Ltd. Without prior written authorization, no individual or organization may use the Four-Faith name, trademarks, or logos in any manner.

Add：11/F, Building A06, Phase III, Xiamen Software Park, Jimei District, Xiamen, China
http：//www.fourfaith.com Tel：400-8838-199 Fax：0592-5912735

Contents

Chapter 1 Product Overview 5
1.1 Overview 5
1.2 Product Features 5
1.3 Product Image 6
1.4 Production Precautions 6
1.4.1 Moisture Sensitivity Level and Protection Requirements 6
1.4.2 Floor Life and Temperature/Humidity Control 7
1.4.3 Storage 8
Chapter 2 Module Interfaces 9
2.1 Module Pin Definition 9
2.3 GPIO Specifications 11
2.4 Absolute Maximum Ratings 11
2.5 Antenna Interface 11
Chapter 3 Module Package 13
3.1 Module Package Drawing 13
3.2 Recommended Packaging Design Dimensions 13
3.3 Reflow Soldering Temperature Range 15
Chapter 4 Module Interfaces Configuration 17
4.1 UART Communication Mode 17
4.1.1 Signal Description 17
4.1.2 Hardware Connection 17
4.1.3 Communication Byte Format 18
Chapter 5 Parameters Configuration 20
5.1 Configuration Connection 20
5.2 Parameter Configuration Method Introduction 20
5.3 Parameter Description 22
5.3.1 LoRa Network Parameter 22
5.3.2 System Parameter 24
5.3.2.1 Serial Port Operating Mode 24
5.3.3 Serial Port Parameter 27
Chapter 6 Reference Circuits 28
6.1 Power Supply Reference Circuit 28
6.2 Serial Communication Reference Circuit 29
6.3 I/O Input and Output Control Design 32
6.4 I/O Port Protection Circuit 33
6.5 Reset Circuit 33

Add：11/F, Building A06, Phase III, Xiamen Software Park, Jimei District, Xiamen, China
http：//www.fourfaith.com Tel：400-8838-199 Fax：0592-5912735

Chapter 1 Product Overview

1.1 Overview

The F8L10C-03 series LoRa data transmission module is an embedded wireless data transmission module based on LoRa technology, providing long-range wireless data communication over LoRa networks. It is designed with a low-power domestic XHSC MCU and the Semtech SX1262 chipset. Featuring a compact design, the module is ultra-small with extremely low power consumption, and supports LoRaWAN protocol as well as Four-Faith private protocol.

With its ultra-compact size, the module can be widely applied in M2M industries across the IoT ecosystem, including smart grid, intelligent transportation, wireless utility metering (water, gas, and heat), wireless automatic data acquisition, industrial automation, smart buildings, fire protection, public safety, environmental protection, meteorology, digital healthcare, remote sensing, military, space exploration, agriculture, forestry, water management, coal mining, petrochemical, and other fields.

1.2 Product Features

Industrial-grade Design

- Powered by a high-performance industrial-grade chipset; module firmware supports Four-Faith private protocol and LoRaWAN 1.0.4
- RF chip supports all ISM bands from 150MHz to 960MHz; module supports 410–510MHz and 863–928MHz bands
- ESD protection design compliant with Level 4 electrostatic discharge standards
- Built-in 32MHz industrial-grade high-precision temperature-compensated crystal oscillator (TCXO)
- Low power design with sleep and wake-up modes; minimum current < 2μA
- Maximum transmit power of 22dBm, adjustable in multiple levels (5–22dBm), default 20dBm
- Receiver sensitivity up to -137dBm @125kHz, SF12, CR1
- Power supply: DC 1.8–3.6V
- Supports UART firmware upgrade and remote OTA
- Compact 1.27mm × 10 stamp-hole package (dual-side)
- Multiple baud rates and RF data rates supported
- Supports spreading factors SF5–SF12
- Data rate from 0.3 kbps to 62.5 kbps in LoRa™ mode
- Supports both IPEX connector and pin-type RF output
- Supports hardware reset

Add：11/F, Building A06, Phase III, Xiamen Software Park, Jimei District, Xiamen, China
http：//www.fourfaith.com Tel：400-8838-199 Fax：0592-5912735

1.3 Product Image

1.4 Production Precautions

1.4.1 Moisture Sensitivity Level and Protection Requirements

Four-Faith LoRa modules are moisture-sensitive products. Exposure to humid environments may cause moisture absorption, leading to malfunction. Therefore, all LoRa modules are packaged in vacuum-sealed bags upon shipment, with additional humidity indicator cards and desiccants included inside to prevent moisture damage.

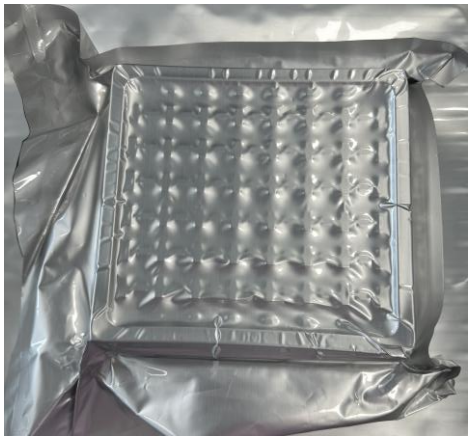

Figure 1-1 Vacuum Packaging Display

Before using the module, check whether the packaging is intact. After opening the package, verify the status of the humidity indicator card inside the vacuum bag. If the following condition occurs, the module must be baked before use:

- Humidity indicator card: the 10% indicator spot turns pink and is no longer blue, as shown below.

Add：11/F, Building A06, Phase III, Xiamen Software Park, Jimei District, Xiamen, China
http：//www.fourfaith.com Tel：400-8838-199 Fax：0592-5912735

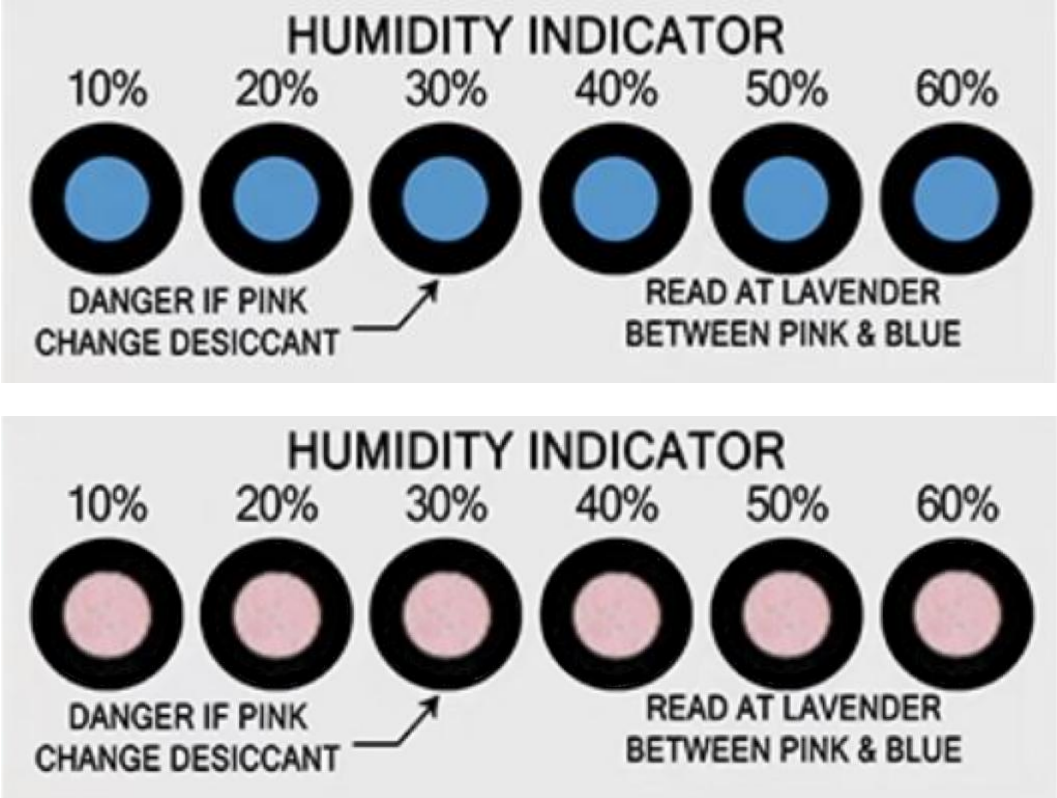

Figure 1-2 Humidity Indicator Card

1.4.2 Floor Life and Temperature/Humidity Control

The LoRa module has a Moisture Sensitivity Level (MSL) of 3, with a floor life of 168 hours.

1) Under workshop conditions of 23°C ±5°C and relative humidity below 60%, the module must undergo reflow soldering or other high-temperature processes within 168 hours after unpacking. Otherwise, it should be stored in an environment with relative humidity below 10% (e.g., a dry cabinet) to maintain dryness.
2) If the workshop temperature/humidity conditions are uncertain or the relative humidity exceeds 60%, SMT reflow must be completed within 24 hours after unpacking. Do not open large quantities of packages in advance.
3) To prevent soldering defects such as blistering and delamination caused by moisture absorption, strict control is required. It is not recommended to expose modules to air for extended periods after opening the vacuum packaging.
4) In cases of vacuum packaging leakage, non-compliance with moisture control requirements after opening, bulk materials, or materials exceeding a 1-year shelf life, pre-baking is required before SMT or rework. Bake at 120°C ±5°C for 24 hours to prevent blistering, cracking, and delamination during high-temperature soldering due to moisture absorption.

Add：11/F, Building A06, Phase III, Xiamen Software Park, Jimei District, Xiamen, China
http：//www.fourfaith.com Tel：400-8838-199 Fax：0592-5912735

5) Before baking, remove the modules from the packaging and place the bare modules on heat-resistant fixtures (do not bake plastic trays or reel packaging). Modules that undergo re-baking must be soldered within 24 hours after baking; otherwise, they should be stored in a dry cabinet. During handling, ensure proper ESD protection and wear anti-static gloves.
6) After baking, when placing bare modules for SMT, the pick-and-place machine should use a tray, as described below:

Method 1: Use a dedicated, size-matched tray. Place the modules on the tray before loading them onto the pick-and-place machine.
Method 2: If a dedicated tray is unavailable, black antistatic carrier tape used for packaging the modules can be employed. Cut multiple strips of equal length and arrange them neatly in a grid on the pick-and-place machine's tray to serve as a temporary tray.

1.4.3 Storage

Recommended storage conditions: Temperature of 23 °C ± 5 °C with relative humidity of 35 %–60 %.
Shelf life (under sealed vacuum packaging): Under the recommended storage conditions, the shelf life is 12 months.

Add：11/F, Building A06, Phase III, Xiamen Software Park, Jimei District, Xiamen, China
http：//www.fourfaith.com Tel：400-8838-199 Fax：0592-5912735

Chapter 2 Module Interfaces

2.1 Module Pin Definition

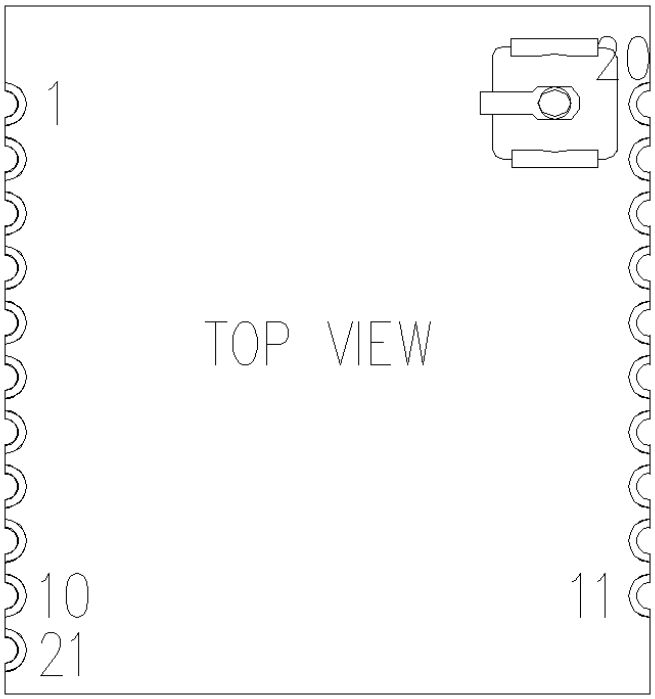

Figure 2-1 Pin Diagram of F8L10C-03 Module

Add：11/F, Building A06, Phase III, Xiamen Software Park, Jimei District, Xiamen, China
http：//www.fourfaith.com Tel：400-8838-199 Fax：0592-5912735

Table 2-1-1 Module Interface Definition

No.	Definition	I/O	Description
1	GND	N/A	Ground
2	VCC	Input	Power Supply
3	D5	I/O	GPIO05/ADC_IN2
4	GND	N/A	Ground
5	D2	I/O	GPIO02/ADC_IN5
6	D10/TXDone	I/O	GPIO10 (Transmission Complete Notification)
7	RX	Input	UART Data In
8	TX	Output	UART Data Out
9	JIMS_SWDIO	Input	Debug Data
10	JTCK_SWCLK	Input	Debug Clock
11	GND	N/A	Ground
12	D11/RXDone	Either	GPIO11 (Reception Complete Notification)
13	STATUS	Either	Sleep Status Indicator
14	D1/SLEEP_RQ	Either	GPIO01 (Sleep Control)/ADC_IN7
15	D3	Either	GPIO03/ADC_IN6
16	D4	Either	GPIO04/ADC_IN4
17	GND	N/A	Ground
18	RESET	Input	External Reset Signal
19	GND	N/A	Ground
20	RF_OUT	N/A	F8L10C-03XN Version RF Input/Output
21	NC	NC	NC

Signal input/output is relative to the module. In the table, pins D1–D5 correspond to IO1–IO5 in the IO application of the configuration tool. The 12-bit ADC reference voltage is 3.3 V, with a measurement range of 0.1–3.3 V and a resolution of 0.01 V.

Note: Signal input/output is relative to the module.

Remarks:

- The sleep control pin is active-high to wake up the module and active-low to enter sleep mode.
- The sleep status indicator pin is high when the module is awake and low when it is in sleep mode.
- The transmission complete notification pin is normally low; it goes high for 10 ms upon transmission completion.
- The reception complete notification pin is normally low; it goes high for 10 ms upon reception completion (default value, configurable via AT commands).

Add：11/F, Building A06, Phase III, Xiamen Software Park, Jimei District, Xiamen, China
http：//www.fourfaith.com Tel：400-8838-199 Fax：0592-5912735

2.2 UART Interface

The module's serial communication port 1 is a UART interface. The pin definitions are shown in Table 2-2：

Table 2-2 UART Pin Definition

UART Signal Name	Module Pin No.
TX0	8
RX0	7

2.3 GPIO Specifications

The F8L10C-03 module provides 10 GPIO ports. The DC characteristics are shown in Table 2-3：

Table 2-3 GPIO DC Characteristics

Parameter	Min	Typ	Max
Input Voltage for Logic 0 (V)	0	—	<0.3 VBAT
Input Voltage for Logic 1 (V)	>0.7VBAT	—	VBAT

2.4 Absolute Maximum Ratings

Table 2-5 Absolute Maximum Ratings

Parameter	Min	Max	Unit
Supply Voltage	-0.3	3.9	V
Pin Input Voltage	-0.3	3.9	V
Storage Temperature Range	-55	125	°C

Note: Exceeding the absolute maximum ratings may cause permanent damage to the module.

2.5 Antenna Interface

The default version uses a 1st-generation Ipex connector as the antenna interface. For the F8L10C-03LN and F8L10C-03HN versions, Pin 20 is used as the RF input/output.

The module supports two RF interface options: Ipex Gen1 connector and Pin 20 RF output.

For external antennas, the voltage standing wave ratio (VSWR) should not exceed 2. Use the shortest possible RF coaxial cable to minimize insertion loss. The antenna should be placed away from large metal surfaces to avoid degrading radiation performance.

Add：11/F, Building A06, Phase III, Xiamen Software Park, Jimei District, Xiamen, China
http：//www.fourfaith.com Tel：400-8838-199 Fax：0592-5912735

When using a built-in antenna, sufficient clearance must be reserved in the PCB layout. The antenna should be designed by a professional RF/antenna engineer to achieve optimal radiation performance. Built-in antenna design must consider the terminal's PCB, enclosure, and installation environment. Antennas for different terminals must be designed individually and should not be reused.

The external RF circuitry and antenna design should follow the 50-ohm impedance matching specification or be validated in consultation with our technical support team.

Add：11/F, Building A06, Phase III, Xiamen Software Park, Jimei District, Xiamen, China
http：//www.fourfaith.com Tel：400-8838-199 Fax：0592-5912735

Chapter 3 Module Package

3.1 Module Package Drawing

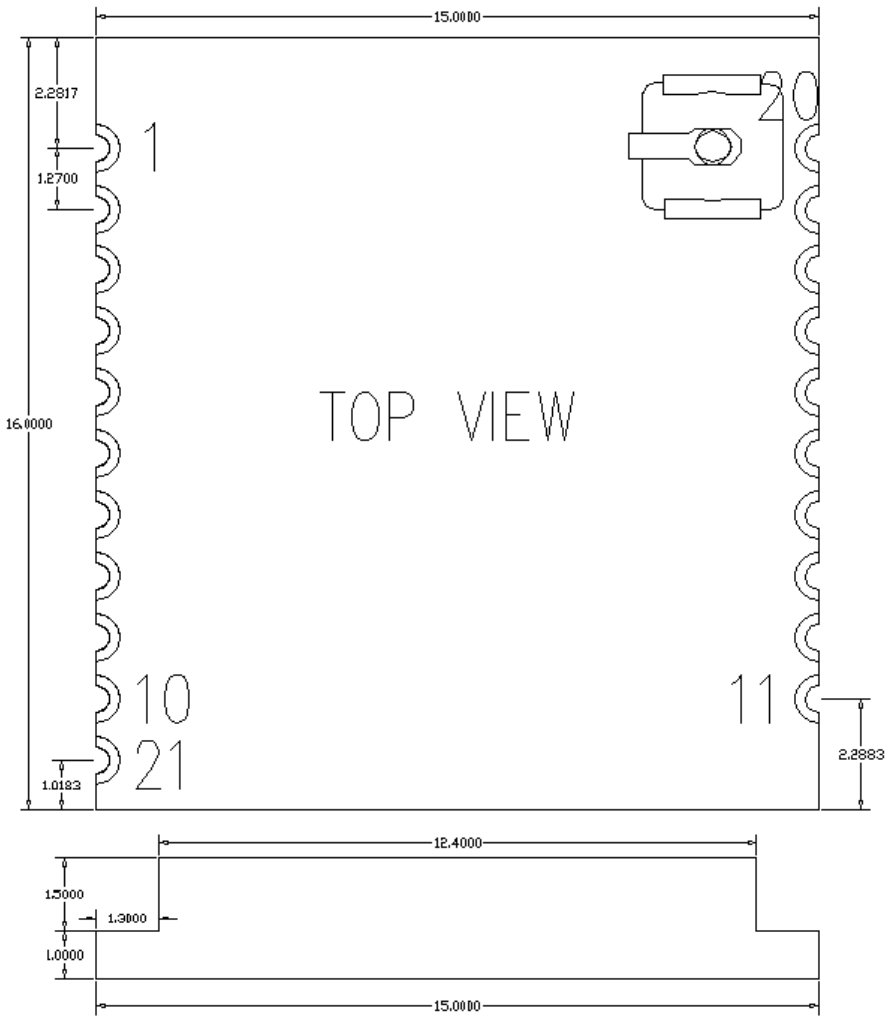

Note: All dimensions are in millimeters (mm)

3.2 Recommended Packaging Design Dimensions

Add：11/F, Building A06, Phase III, Xiamen Software Park, Jimei District, Xiamen, China
http：//www.fourfaith.com Tel：400-8838-199 Fax：0592-5912735

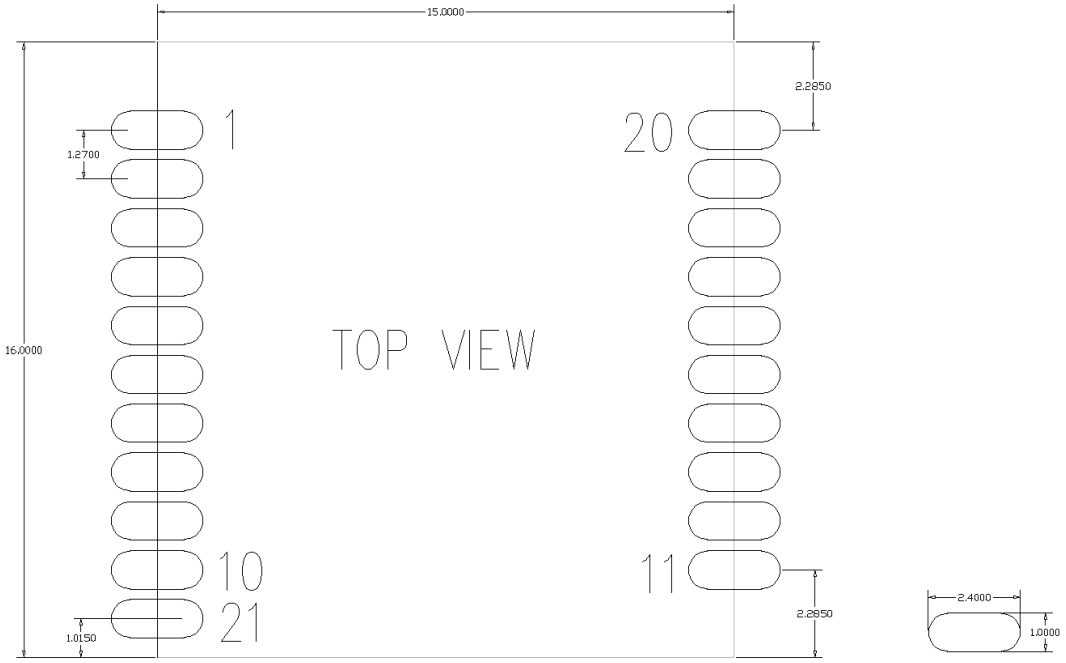

Note: All marked dimensions are in millimeters (mm)

Add：11/F, Building A06, Phase III, Xiamen Software Park, Jimei District, Xiamen, China
http：//www.fourfaith.com Tel：400-8838-199 Fax：0592-5912735

3.3 Reflow Soldering Temperature Range

It is recommended to perform soldering according to the IPC/JEDEC J-STD-020B standard.

Soldering Temperature

- When using a constant-temperature soldering iron, the temperature should not exceed 340ºC, and the soldering time for each pin should not exceed 2 seconds.

SMT Temperature Profile

- When using SMT reflow soldering, the following temperature profile is recommended:

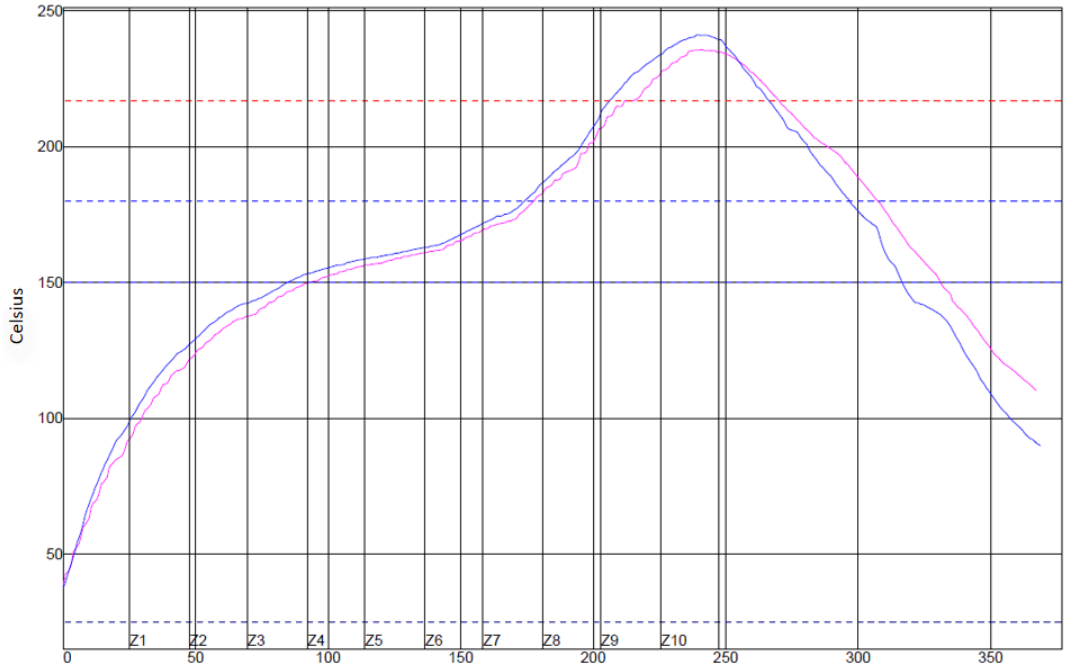

PWI=94%		Max Ramp-Up Rate		Max Ramp-Down Rate		Preheat (25–150°C)	
Line Color	2	1.96	-4%	-1.28	72%	93.1	23%
Line Color	3	2.05	5%	-1.43	57%	84.4	2%
Difference		0.09		0.15		8.70	

PWI=94%	Soak Time (150–180°C)	Time Above 217°C (Reflow	Peak Temperature	Ramp Rate: 3°C/s

Add：11/F, Building A06, Phase III, Xiamen Software Park, Jimei District, Xiamen, China
http：//www.fourfaith.com Tel：400-8838-199 Fax：0592-5912735

				Time)				(250–200°C)	
Line Color	2	85.4	-15%	55.5	-27%	235.8	-54%	-1.15	94%
Line Color	3	89.4	-2%	60.5	-14%	241.3	-10%	-1.48	81%
Difference		4		4.5		5.5		0.33	

Add：11/F, Building A06, Phase III, Xiamen Software Park, Jimei District, Xiamen, China
http：//www.fourfaith.com Tel：400-8838-199 Fax：0592-5912735

Chapter 4 Module Interfaces Configuration

4.1 UART Communication Mode

4.1.1 Signal Description

The following standard UART signals are used:

- **TX**: Transmit data
- **RX**: Receive data

4.1.2 Hardware Connection

The UART hardware connection is shown in Figure 4-1

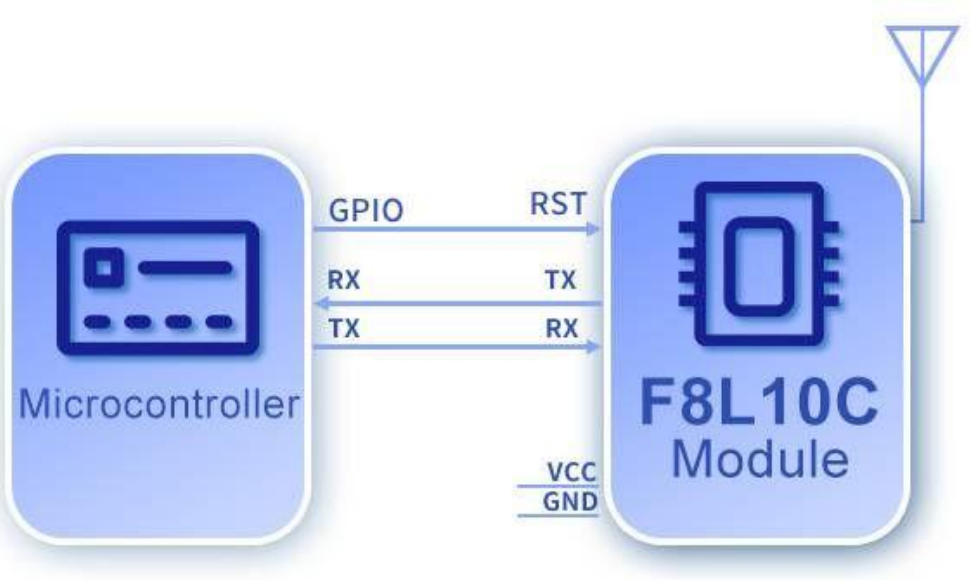

Figure 4-1 UART Interface Connection

Example: As shown in Figure 4-2, a device with a UART interface can be directly connected to the pins of the F8L10C-03 module to form a UART-to-RF communication system.

Add：11/F, Building A06, Phase III, Xiamen Software Park, Jimei District, Xiamen, China
http：//www.fourfaith.com Tel：400-8838-199 Fax：0592-5912735

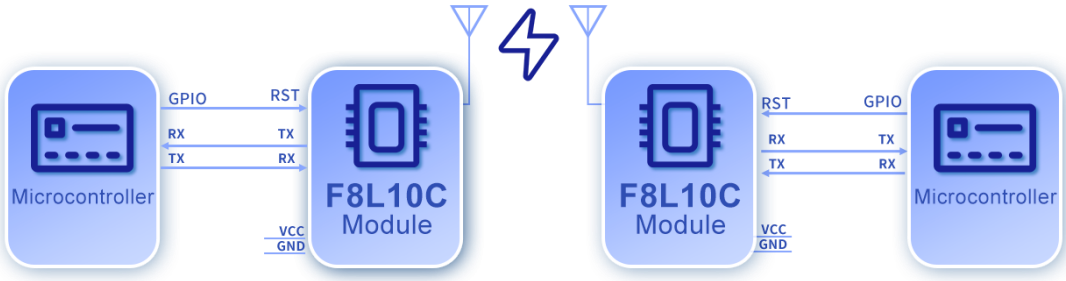

Figure 4-2 Diagram of Communication Between Two Modules

4.1.3 Communication Byte Format

The UART interface communication byte format is shown in Figure 4-3.

	Start	D0	D1	D2	D3	D4	D5	D6	D7	Stop

Figure 4-3 UART Interface Communication Byte Format

1. **Communication Interface:** UART
2. **Baud Rate:** 600, 1200, 2400, 4800, 9600, 19200, 38400, 57600, 115200 bps
3. **Start Bit:** 1 bit
4. **Data Bits:** 8 bits
5. **Stop Bits:** 1 or 2 bits
6. **Parity:** None / Odd / Even

UART uses asynchronous transmission and reception, allowing simultaneous sending and receiving, enabling full-duplex communication. Data transmission can be initiated either by an external device or by the module itself.

As shown in Figure 4-3, each data byte consists of one start bit (low level), 8 data bits, and one stop bit (high level).

Example: As shown in Figure 4-4, the diagram illustrates UART transmitting the byte 0x1F (decimal 31) in 8-N-1 mode (8 data bits, no parity, 1 stop bit).

Add：11/F, Building A06, Phase III, Xiamen Software Park, Jimei District, Xiamen, China
http：//www.fourfaith.com Tel：400-8838-199 Fax：0592-5912735

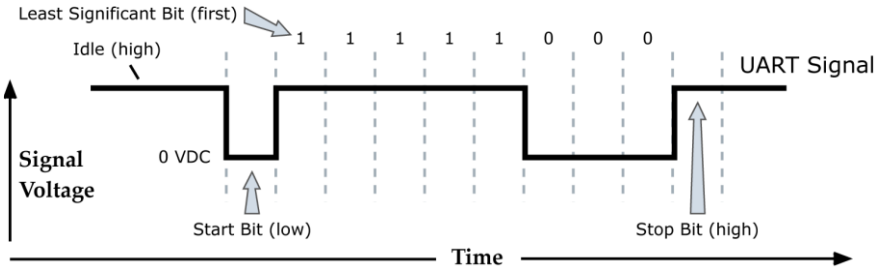

Figure 4-4 Data Transmission Diagram for 0x1F

Add：11/F, Building A06, Phase III, Xiamen Software Park, Jimei District, Xiamen, China
http：//www.fourfaith.com Tel：400-8838-199 Fax：0592-5912735

Chapter 5 Parameters Configuration

5.1 Configuration Connection

Before configuring the F8L10C-03 series module, it is necessary to connect the module to a host device. The host can be a PC, or it can be connected to other devices with a UART interface as shown in Figure 3-1.When connecting to a PC, a dedicated development board for the LoRa module provided by our company can be used (the F8L10C-03 needs to be mounted on an adapter board). The connection diagram is shown in Figure 5-1.

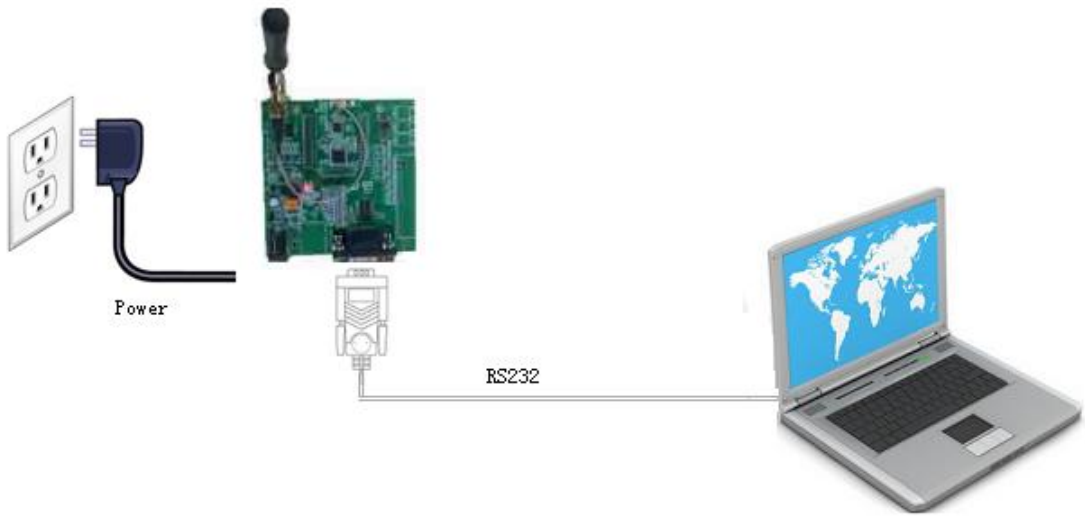

Figure 5-1 Configuration Connection between F8L10C-03 and PC

5.2 Parameter Configuration Method Introduction

The F8L10C-03 series modules support two configuration methods:

1. **Configuration via the latest Four-Faith LoRa configuration software (LoRaConfig):** All parameters can be configured through the corresponding options in the software interface. This method is suitable when users can conveniently use a PC for configuration.
2. **Configuration via extended AT commands (hereinafter referred to as AT commands):** With this method, users only need a serial communication program to configure all parameters of the F8L10C-03 module, such as HyperTerminal on Windows, or minicom and PuTTY on Linux. Alternatively, users can directly configure the module via their own MCU system. Before using extended AT commands, the module must be set to

Add：11/F, Building A06, Phase III, Xiamen Software Park, Jimei District, Xiamen, China
http：//www.fourfaith.com Tel：400-8838-199 Fax：0592-5912735

configuration mode.

For AT command configuration, please refer to the AT Command Manual.

Configuration via the software is shown in Figure 5-2.

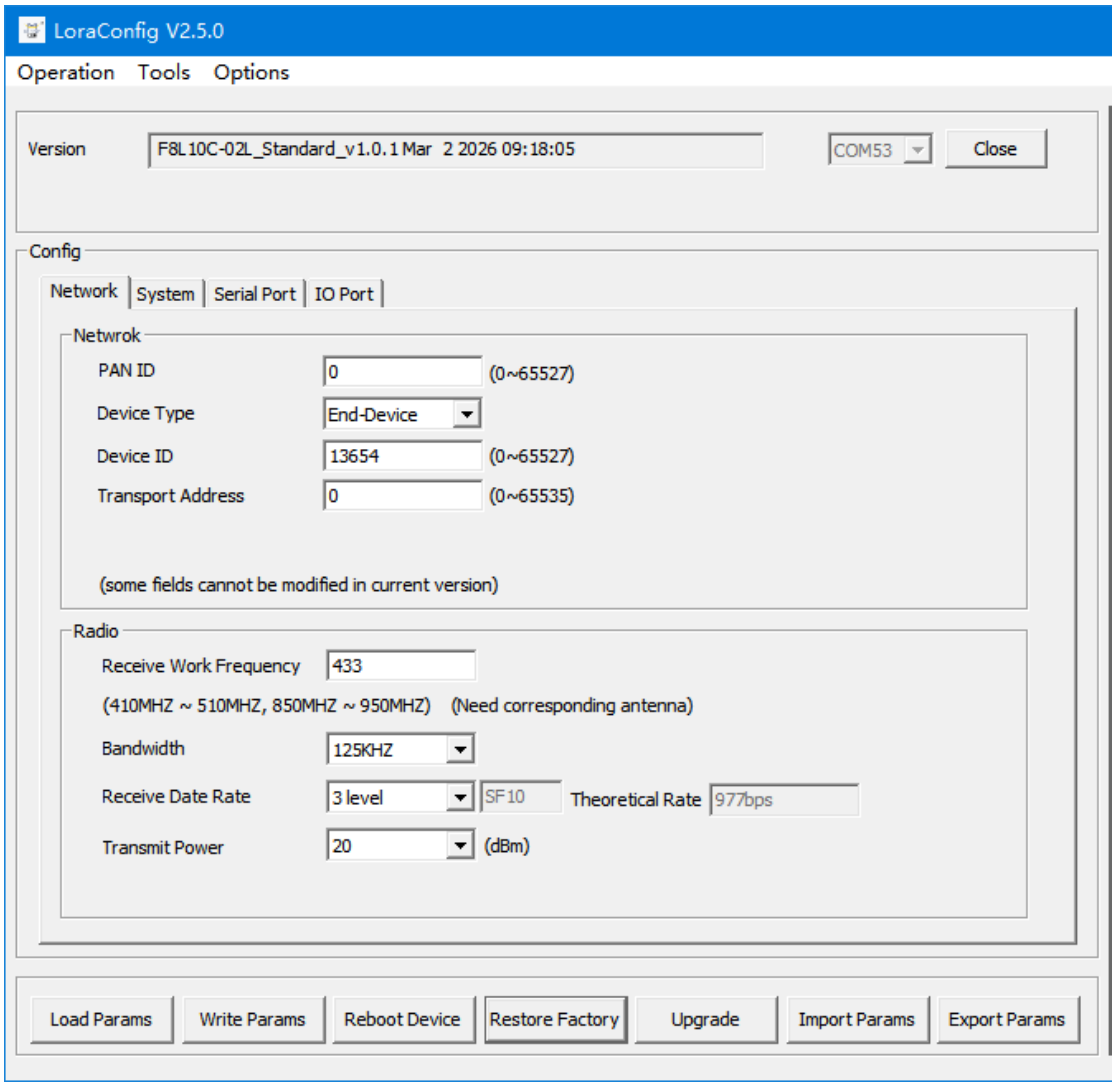

Figure 5-2 Configuration Interface

In the toolbar, select **"Options"** and then the submenu **"Serial Port Settings"** to display the parameters of the currently opened serial port. Please select the correct settings in this section and open the serial port. If the button on the right side of the serial port settings shows **"Close Port"**, it indicates that the port is already open; otherwise, please open the port.

After powering on the device, click **"Load Parameters"** in the configuration software. The module will automatically load the current configuration parameters from the device according to the software version and display them in the parameter area. You can then begin configuring all parameters of the F8L10C-03, as shown in Figure 5-2.

Add：11/F, Building A06, Phase III, Xiamen Software Park, Jimei District, Xiamen, China
http：//www.fourfaith.com Tel：400-8838-199 Fax：0592-5912735

5.3 Parameter Description

The following sections mainly describe the configuration items of the F8L10C-03 module using the AT command configuration method.

5.3.1 LoRa Network Parameter

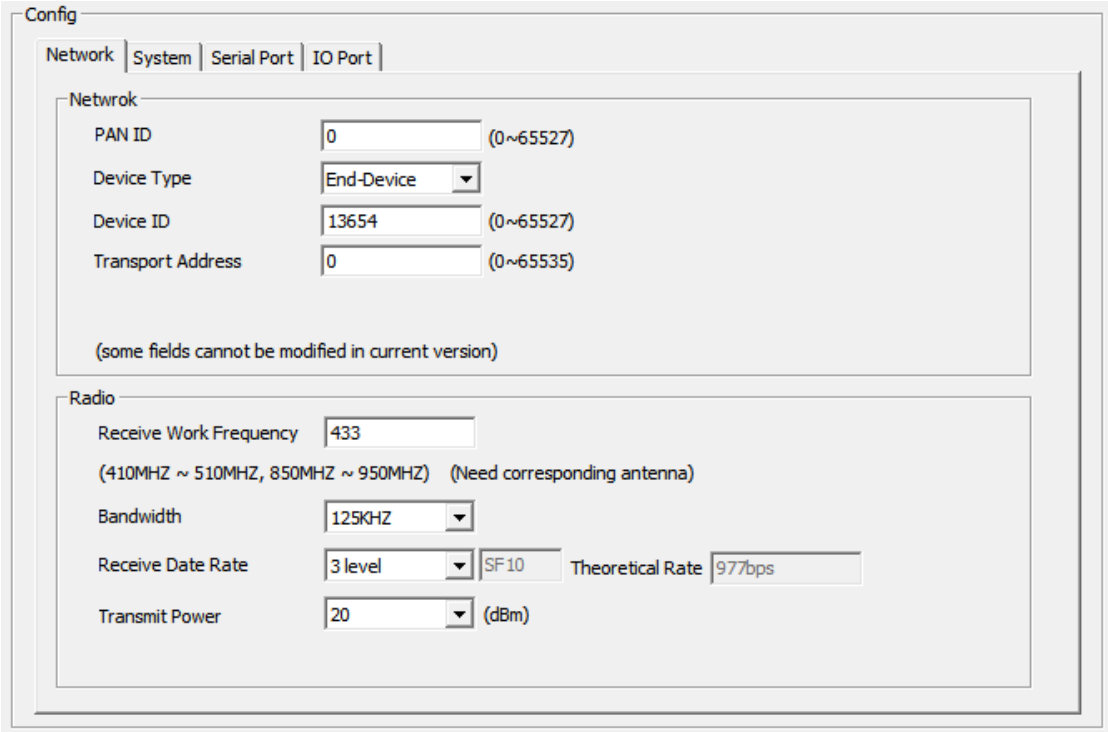

5.3.1.1 Network ID

The Network ID is used to distinguish different LoRa networks. Only devices operating on the same channel and using the same Network ID can communicate with each other.

5.3.1.2 Device Type

A node with Device Type 1 (repeater) has relay functionality and requires continuous power supply.

A node with Device Type 2 (terminal) has no relay function and can enter sleep mode.

5.3.1.3 Device ID

Sets the module ID, with a configurable range of 0–65527.

5.3.1.4 Relay Address (Unused)

Note: The F8L10C-03 supports the MESH protocol, and this parameter is not used. To enable relay functionality, simply configure the device type of the relay node as a repeater.

Add：11/F, Building A06, Phase III, Xiamen Software Park, Jimei District, Xiamen, China
http：//www.fourfaith.com Tel：400-8838-199 Fax：0592-5912735

5.3.1.5 Transparent Transmission Address

In transparent transmission mode, serial data can be directly sent to the device with this address. Configurable range: 0–65535.

5.3.1.6 Carrier Frequency

This is the operating frequency for data transmission. Different hardware modules support different frequency bands, generally divided into low-frequency bands (below 525 MHz) and high-frequency bands (above 525 MHz).
Typical frequency ranges include 410–510 MHz and 863–928 MHz, with 1000 kHz per channel. Different regions have different frequency regulations and interference levels, which may affect the bit error rate. Therefore, this value should be adjusted based on actual conditions.

The default value is 433 MHz for low-frequency modules and 868 MHz for high-frequency modules.

5.3.1.7 Transmit Power

The maximum transmit power is -3 dBm. The factory default setting is -4 dBm.

5.3.1.8 Air Data Rate

This defines the data rate over the air, with 8 selectable levels (SF5–SF12). Higher levels correspond to higher data rates, but shorter transmission distances under the same conditions. Therefore, this parameter should be adjusted according to the application environment.
Note: Once the data rate is set, all devices must use the same rate; otherwise, communication will not be possible.
Default value: Level 3. Coding rate: CR 4/5.

Rate Level	Air Data Rate (kbps)	Spreading Factor (SF)	Bandwidth (kHz)
1	0.3	SF12	125
	0.6	SF12	250
	1.2	SF12	500
2	0.6	SF11	125
	1.1	SF11	250
	2.1	SF11	500
3	1.0	SF10	125
	2.0	SF10	250
	3.9	SF10	500
4	1.8	SF9	125
	3.5	SF9	250
	7.0	SF9	500
	3.1	SF8	125

Add：11/F, Building A06, Phase III, Xiamen Software Park, Jimei District, Xiamen, China
http：//www.fourfaith.com Tel：400-8838-199 Fax：0592-5912735

5	6.3	SF8	250
	12.5	SF8	500
6	5.5	SF7	125
	10.9	SF7	250
	21.9	SF7	500
7	9.4	SF6	125
	18.8	SF6	250
	37.5	SF6	500
8	15.6	SF5	125
	31.3	SF5	250
	62.5	SF5	500

5.3.2 System Parameter

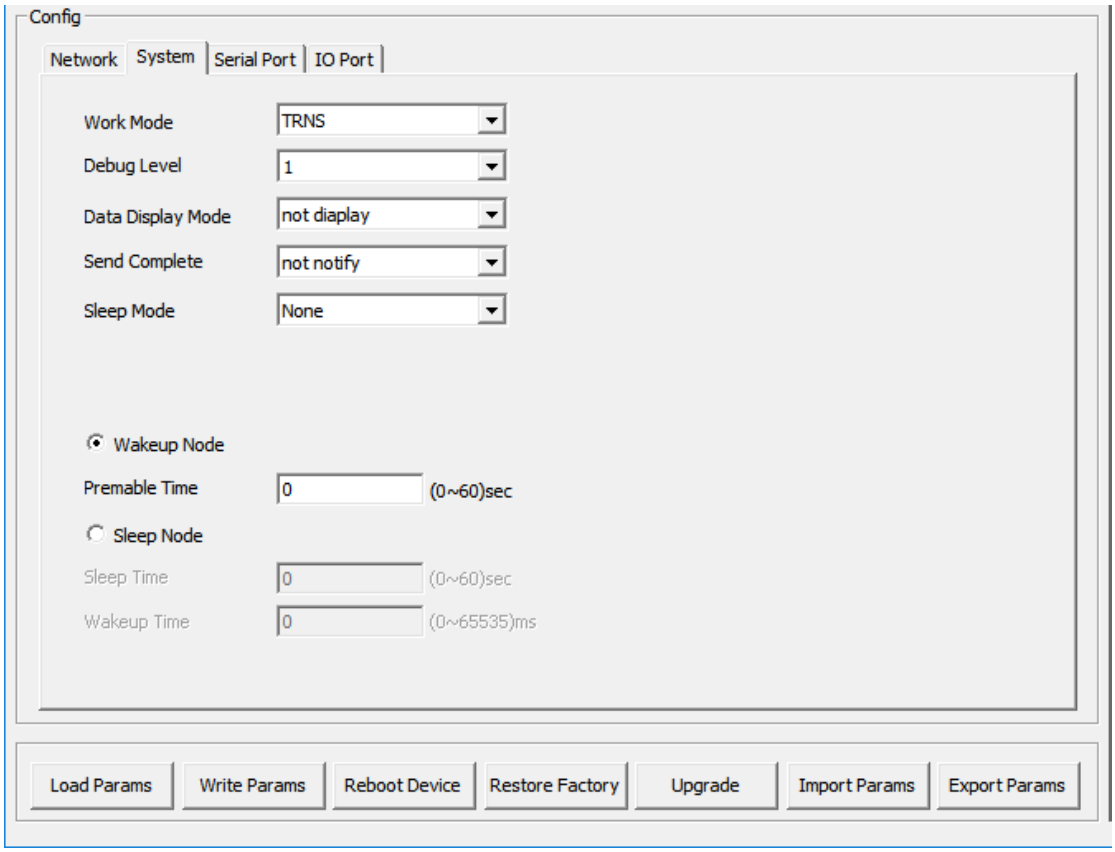

5.3.2.1 Serial Port Operating Mode

The module's serial port operating modes include "TRNS", "AT", "API", and "MODBUS". Where:

Add: 11/F, Building A06, Phase III, Xiamen Software Park, Jimei District, Xiamen, China
http: //www.fourfaith.com Tel: 400-8838-199 Fax: 0592-5912735

"TRNS": Transparent transmission mode. In this mode, a transparent destination address must be configured.
"AT": AT command mode. Refer to the AT Command Manual for operation. Typically used for parameter configuration and manual testing.
"API": API operation mode. Refer to the API Command Manual for command formats. The maximum API payload length is 75 bytes.
"MODBUS": MODBUS operation mode. Refer to the MODBUS Command Manual for command formats.
Default value: TRNS

5.3.2.2 Debug Level

The debug level controls the module's log output and includes three levels:
0: No log output
1: Outputs key log information
2: Outputs detailed log information
Default value: 1

5.3.2.3 Sleep Mode

When the device operates in low-power mode, it can be set to NONE (no sleep), TIME (timed sleep), or DEEP (deep sleep).
In deep sleep mode, the module can only be awakened by resetting via the RST pin or by setting the sleep control pin to a high level.
Default value: NONE

5.3.2.4 Wake-up over the Air

In wireless network applications, there is a low-power operating mode known as wake-up over the air. Even when a node is in sleep mode, it can be remotely awakened via wireless signals to receive data.

The basic principle is that the initiating device adds a long preamble before the valid data. The receiving node periodically wakes up to listen to the network. Once the preamble is detected, it enters the normal receiving process; otherwise, it immediately returns to sleep and waits for the next wake-up cycle.

Add：11/F, Building A06, Phase III, Xiamen Software Park, Jimei District, Xiamen, China
http：//www.fourfaith.com Tel：400-8838-199 Fax：0592-5912735

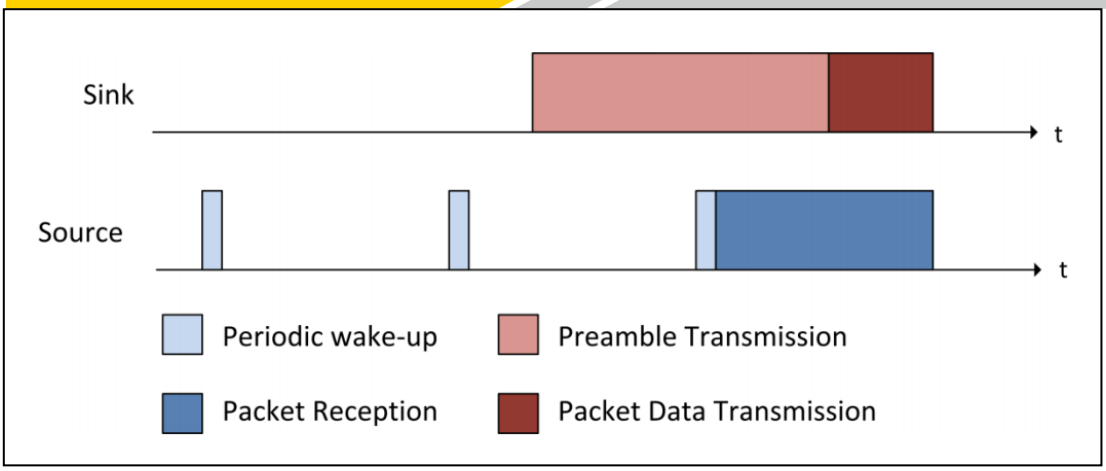

If wake-up over the air needs to be enabled, configuration should be performed separately for the **wake-up transmitter** and the **sleeping receiver**.

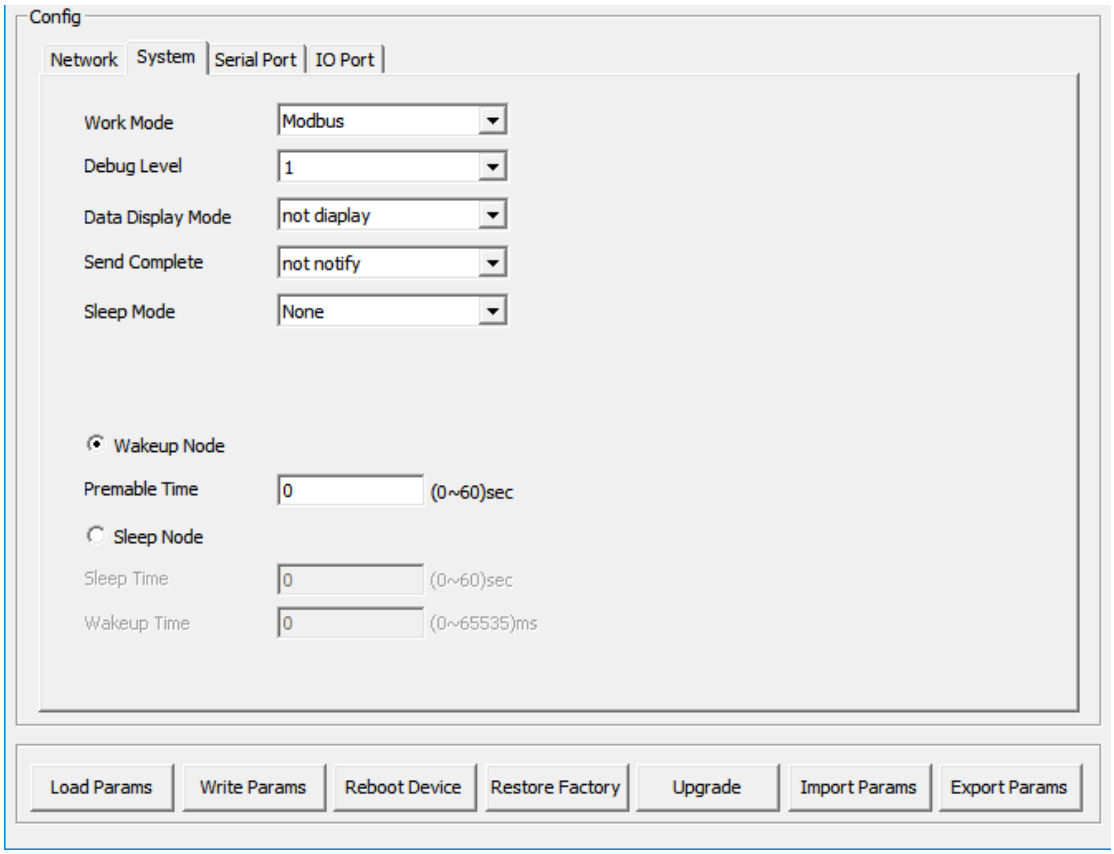

For the **sleep node using over-the-air (OTA) wake-up**, the parameters **"Wake-up Time"** and **"Sleep Time"** need to be configured:

- **Wake-up Time:** The duration (in ms) that the device remains awake after receiving OTA data. After receiving OTA data and completing UART data transmission, the device will stay awake for this period before entering sleep mode.

Add：11/F, Building A06, Phase III, Xiamen Software Park, Jimei District, Xiamen, China
http：//www.fourfaith.com Tel：400-8838-199 Fax：0592-5912735

- **Sleep Time:** The sleep cycle duration (in seconds). Once the device has been in sleep mode for this period, it will wake up to listen for the preamble.

For the **wake-up node (OTA transmitter side)**, the **"Preamble Time"** must be configured. This value must be consistent with the sleep time of the sleep node; otherwise, communication may fail.

5.3.3 Serial Port Parameter

The serial communication parameters can be configured, including baud rate, data bits, parity, and stop bits.
Default values: Baud rate 115200, format 8N1.

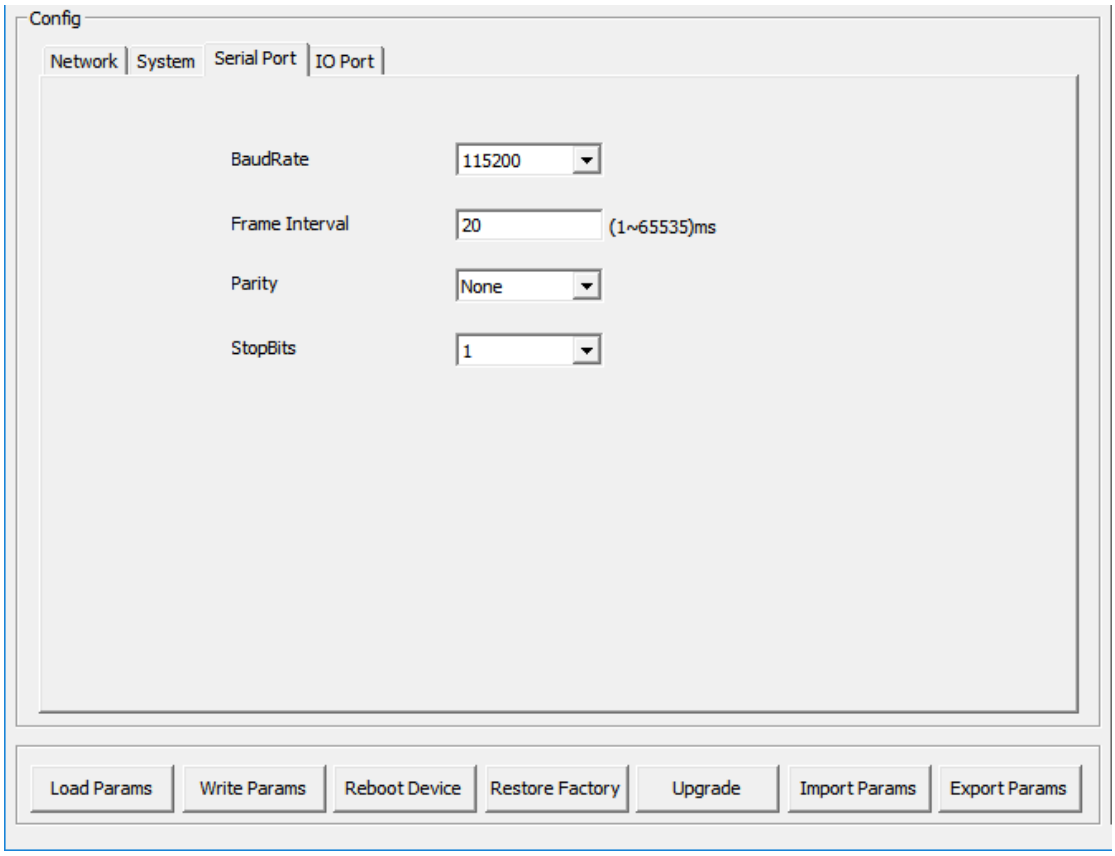

Add：11/F, Building A06, Phase III, Xiamen Software Park, Jimei District, Xiamen, China
http：//www.fourfaith.com Tel：400-8838-199 Fax：0592-5912735

Chapter 6 Reference Circuits

The F8L10C-03 series module is a surface-mount RF module. When designing the circuit board, the module should be treated as a single component unit. Therefore, the following considerations should be taken into account for PCB layout and routing:

PCB Layout

Under the condition of meeting the mechanical structure requirements, the wireless module should be placed away from components that may generate magnetic interference or heat, such as speakers, buzzers, switching power supplies, and inductors. In the module placement area, place as many fast-response capacitors as possible near the power supply interface to prevent transient voltage spikes from damaging the module.

PCB Routing

Data lines should preferably run in parallel on the same layer, with matched lengths as much as possible. Routing within the module area should be avoided, and the integrity of the ground copper plane should be maintained as much as possible.

6.1 Power Supply Reference Circuit

The power supply design of the module is critically important. The F8L10C-03 can be powered by an LDO with low quiescent current and an output current capability greater than 0.5 A. During data transmission, the power supply must remain within the normal operating range; otherwise, the module may malfunction or even suffer permanent damage. Ensure power stability and avoid significant voltage fluctuations.

To prevent excessive voltage drop on VBAT, it is recommended to place, near the VBAT input pin of the module, a parallel combination of a low-ESR capacitor (ESR ≈ 0.7 Ω) with a capacitance of at least 100 µF, along with 100 nF, 33 pF (0603 package), and 10 pF (0603 package) filtering capacitors. A reference circuit for the VBAT input is shown in the figure below.

Additionally, the PCB trace for VBAT should be as short and as wide as possible to minimize equivalent impedance, ensuring that no significant voltage drop occurs under high current at maximum transmit power. It is recommended that the VBAT trace width be no less than 2 mm, and the longer the trace, the wider it should be.

Add：11/F, Building A06, Phase III, Xiamen Software Park, Jimei District, Xiamen, China
http：//www.fourfaith.com Tel：400-8838-199 Fax：0592-5912735

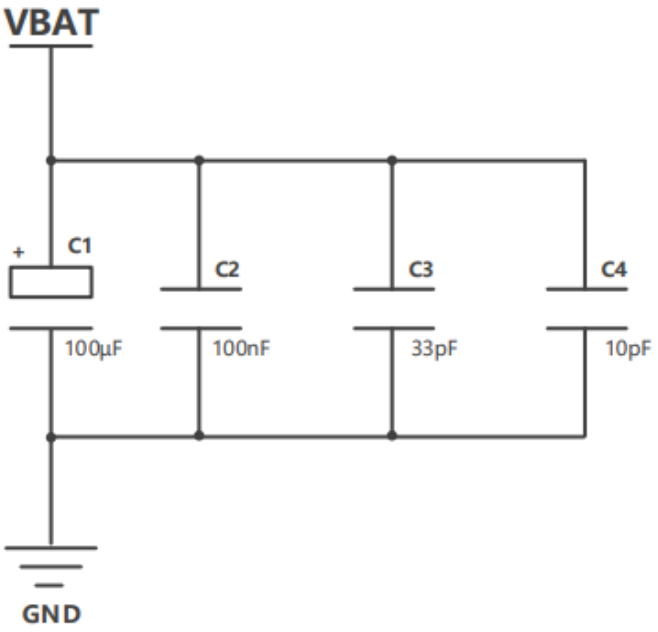

Figure 6-1 VBAT Input Reference Circuit of F8L10C-03

6.2 Serial Communication Reference Circuit

The following describes two types of host systems:

1.PC as Host:

The F8L10C-03 connects to a PC via an RS232 serial port, requiring an RS232 transceiver (e.g., SP3243), as shown in Figure 6-2.

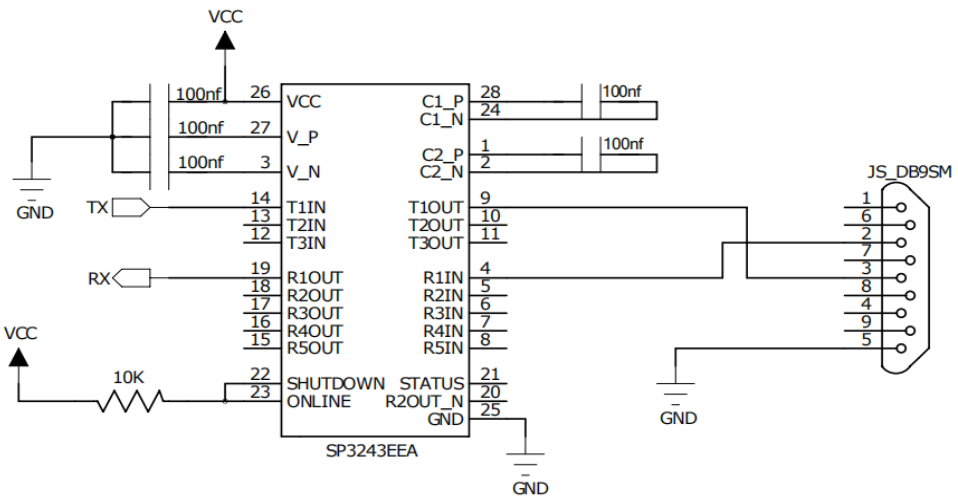

Figure 6-2 Reference Circuit for F8L10C-03 to PC RS232 Connection

Add：11/F, Building A06, Phase III, Xiamen Software Park, Jimei District, Xiamen, China
http：//www.fourfaith.com Tel：400-8838-199 Fax：0592-5912735

2. Industrial PC as Host:

The F8L10C-03 connects to an industrial PC via an RS485 bus, requiring an RS485 transceiver (e.g., SP3485), as shown in Figure 6-3.

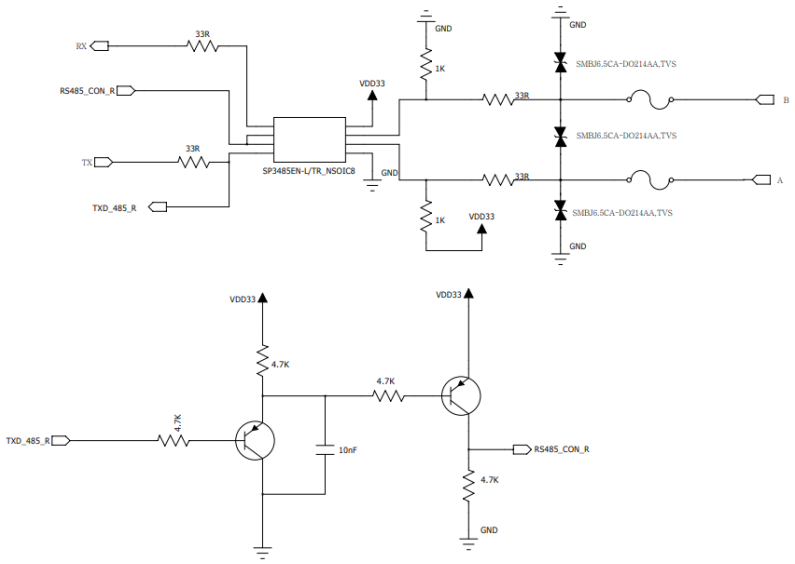

Figure 6-3 Reference Circuit for F8L10C-03 to Industrial PC RS485 Connection

MCU as Host:

If the MCU power supply differs from that of the module, a level-shifting circuit is required. As shown in Figures 6-4 and 6-5, a transistor can be used for level conversion. The resistors shown are for reference only and should be recalculated during design. The diode in the diagram is a Schottky diode (forward voltage drop of 0.3V). If another diode is used, select one with a low forward voltage drop to ensure that the RXD_module input remains below the low-level threshold when receiving a low signal.

Add：11/F, Building A06, Phase III, Xiamen Software Park, Jimei District, Xiamen, China
http：//www.fourfaith.com Tel：400-8838-199 Fax：0592-5912735

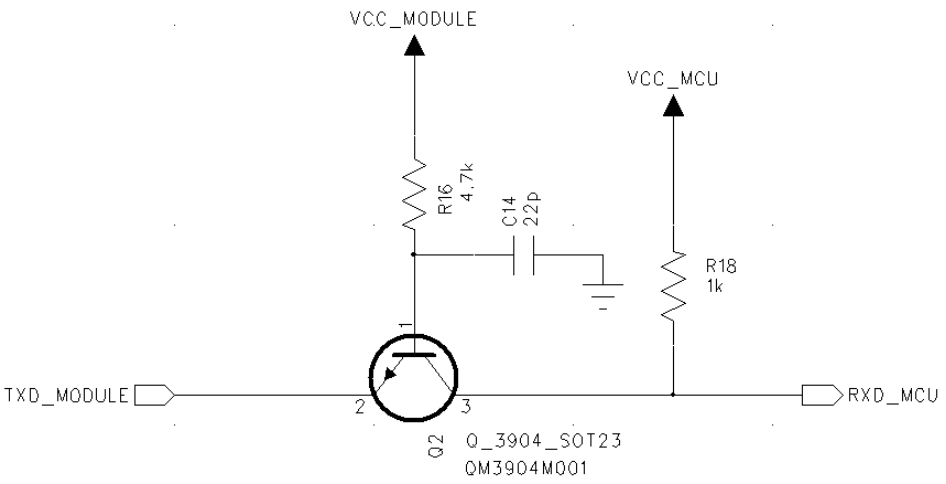

Figure 6-4 UART Interface RX Level-Shifting Reference Design

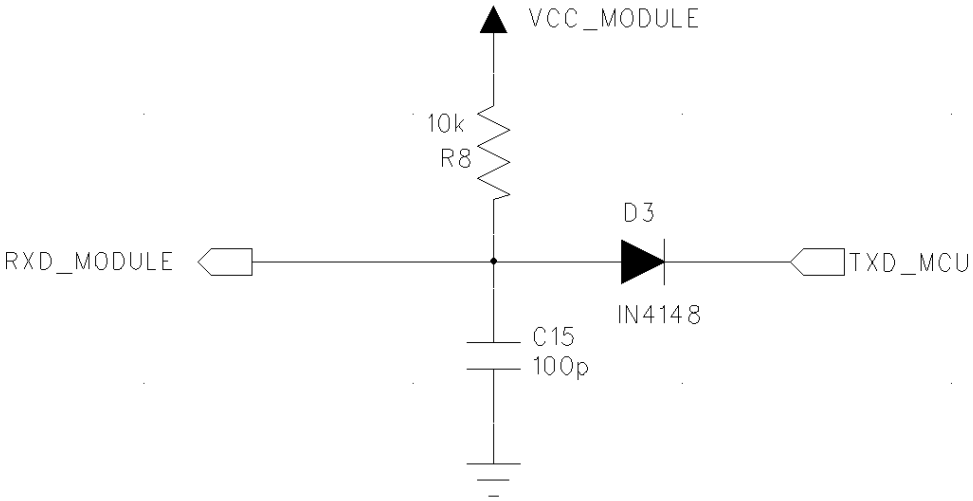

Figure 6-5 UART Interface RX Level-Shifting Reference Design

As shown in Figure 6-6, a dedicated level-shifting IC can also be used for voltage conversion. Various options are available, and users can select according to their needs.

Add：11/F, Building A06, Phase III, Xiamen Software Park, Jimei District, Xiamen, China
http：//www.fourfaith.com Tel：400-8838-199 Fax：0592-5912735

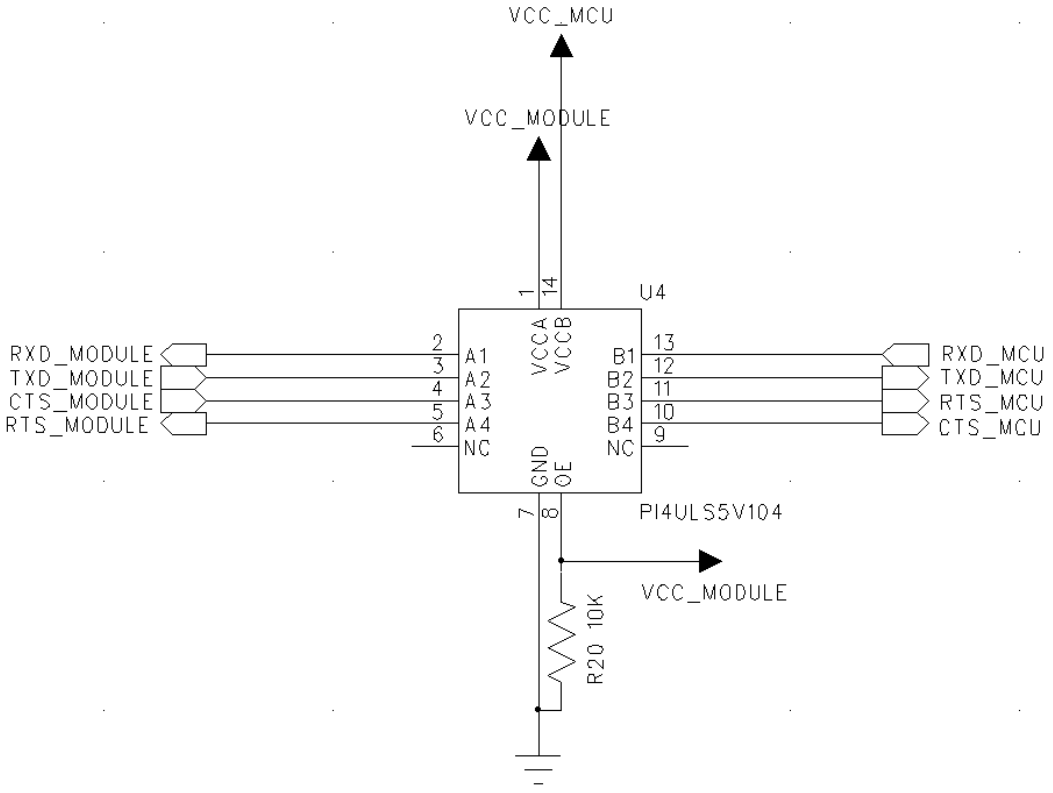

Figure 6-6 UART Interface Level-Shifting IC Reference Design

6.3 I/O Input and Output Control Design

The module's I/O pins can be used to control LED indicators. Since the output current of standard I/O pins is relatively low, it is recommended to use a transistor for control, as shown below:

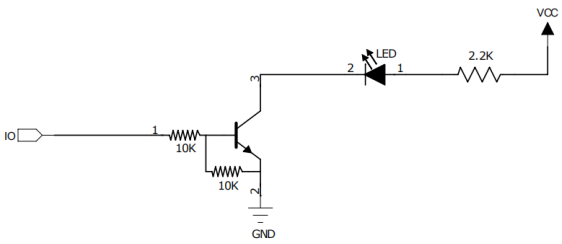

Figure 6-7 LED Control Circuit

Add：11/F, Building A06, Phase III, Xiamen Software Park, Jimei District, Xiamen, China
http：//www.fourfaith.com Tel：400-8838-199 Fax：0592-5912735

6.4 I/O Port Protection Circuit

The module's I/O pins have default ESD protection levels of HBM ±2000V and CDM ±800V. If higher ESD protection is required, users can add external protection circuits to improve immunity, as shown below:

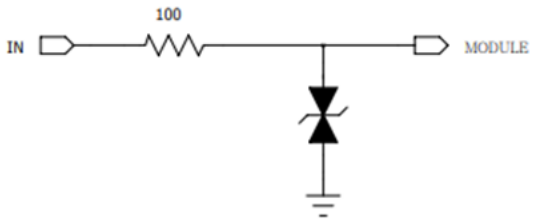

Figure 6-10 I/O Port Protection Circuit

6.5 Reset Circuit

The F8L10C-03 starts automatically upon power-up and does not have dedicated power-on or power-off pins. However, it provides a hardware reset pin (digital input, active low). The reset pulse width must be greater than 200 ms, and the valid low-level voltage must not exceed 0.4V. Due to complex operating environments and long working durations, issues such as system hangs or false connections may occur. Proper recovery mechanisms should be considered in the application design:

1.Manual Reset:

Use a push button to pull the reset pin to ground when pressed and disconnect it when released.

2.MCU-Controlled Reset:

Use an MCU to control a transistor to pull the RESET pin low for hardware reset, as shown below:

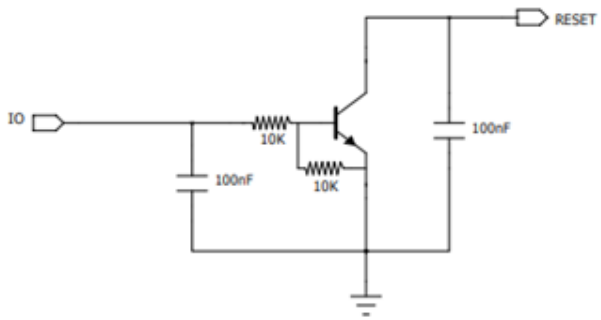

Figure 6-11 MCU-Controlled Transistor Reset Reference Circuit

Add：11/F, Building A06, Phase III, Xiamen Software Park, Jimei District, Xiamen, China
http：//www.fourfaith.com Tel：400-8838-199 Fax：0592-5912735

KDB 996369 D03 statements

2.2 List of applicable FCC rules:

The module complies with FCC Part 15.249.

FCC ID: 2ALUW-F8L10C on User manual and on the external of the packaging.

2.3 Summarize the specific operational use conditions

The module has been certified for Potable applications. This transmitter must not beco-located or operating in conjunction with any other antenna or transmitter

2.4 Limited module procedures

The module is not a limited module.

2.5 Trace antenna designs

Not applicable

2.6 RF exposure considerations

This equipment complies with FCC's RF radiation exposure limits set forth for an uncontrolled environment. The antenna(s) used for this transmitter must not be collocated or operating in conjunction with any other antenna or transmitter.

2.7 Antennas

The EUT use a permanently attached antenna which is unique.

2.8 Label and compliance information

The host system using this module, should have label in a visible area indicated the following texts: "Contains FCC ID: 2ALUW-F8L10C

2.9 Information on test modes and additional testing requirements

When testing host product, the host manufacture should follow FCC KDB Publication 996369 D04 Module Integration Guide for testing the host products. The host manufacturer may operate their product during the measurements. In setting up the configurations, if the pairing and call box options for testing does not work, then the host product manufacturer should coordinate with the module manufacturer for access to test mode software.

The module has been certified for Potable applications. This transmitter must not be co-located or operating in conjunction with any other antenna or transmitter

2.10 Additional testing, Part 15 Subpart B disclaimer

The module without unintentional-radiator digital circuity, so the module does not require an evaluation by FCC Part 15 Subpart B. The host shoule be evaluated by the FCC Subpart B.

2.11 Note EMI Considerations

host manufacture is recommended to use D04 Module Integration Guide recommending as "best practice" RF design engineering testing and evaluation in case non-linear interactions generate additional non-compliant limits due to module placement to host components or properties

2.12 How to make changes

This module is stand-alone modular. If the end product will involve the Multiple simultaneously transmitting condition or different operational conditions for a stand-alone modular transmitter in evaluation (i.e., no C2PC required when no emission exceeds the limit of any individual device (including unintentional radiators) as a composite. The host manufacturer must fix any failure

a host, host manufacturer have to consult with module manufacturer for the installation method in end system. According to the KDB 996369 D02 Q&A Q12, that a host manufacture only needs to do anevaluation (i.e., no C2PC required when no emission exceeds the limit of any individual device(including unintentional radiators) as a composite. The host manufacturer must fix any failure

FCC Caution.

This device complies with part 15 of the FCC Rules. Operation is subject to the following two conditions:

(1) This device may not cause harmful interference, and

(2) this device must accept any interference received, including interference that may cause undesired operation.

Any Changes or modifications not expressly approved by the party responsible for compliance could void the user's authority to operate the equipment.

Note: This equipment has been tested and found to comply with the limits for a Class B digital device, pursuant to part 15 of the FCC Rules. These limits are designed to provide reasonable protection against harmful interference in a residential installation. This equipment generates uses and can radiate radio frequency energy and, if not installed and used in accordance with the instructions, may cause harmful interference to radio communications. However, there is no guarantee that interference will not occur in a particular installation. If this equipment does cause harmful interference to radio or television reception, which can be determined by turning the equipment off and on, the user is encouraged to try to correct the interference by one or more of the following measures:

-Reorient or relocate the receiving antenna.

-Increase the separation between the equipment and receiver.

-Connect the equipment into an outlet on a circuit different from that to which the receiver is connected.

-Consult the dealer or an experienced radio/TV technician for help.

FCC Radiation Exposure Statement:

This equipment complies with FCC radiation exposure limits set forth for an uncontrolled environment. This equipment should be installed and operated with minimum distance 20 cm between the radiator & your body.

CE Maintenance

1.The product shall only be connected to a USB interface of version Type-C.

2.Adapter shall be installed near the equipment and shall be easily accessible.

3.EUT Operating temperature range: -40° C to 85° C .

4.The device complies with RF specifications when the device used at 20cm you're your body.

Declaration of Conformity

Xiamen Four-Faith Communication Technology Co., Ltd. hereby declares that this LoRa Module is in compliance with the essential requirements and other relevant provisions of Directive 2014/53/EU. In accordance with Article 10(2) and Article 10(10),This product is allowed to be used in all EU member states.

Frequency Bands: 863-870MHz
Max power: 10.21dBm
Modulation Mode: LORA
Rod antenna, Gain(s): 0dBi.