3-Phase DIN RAIL OFDMA Master Light Controller- GC1338

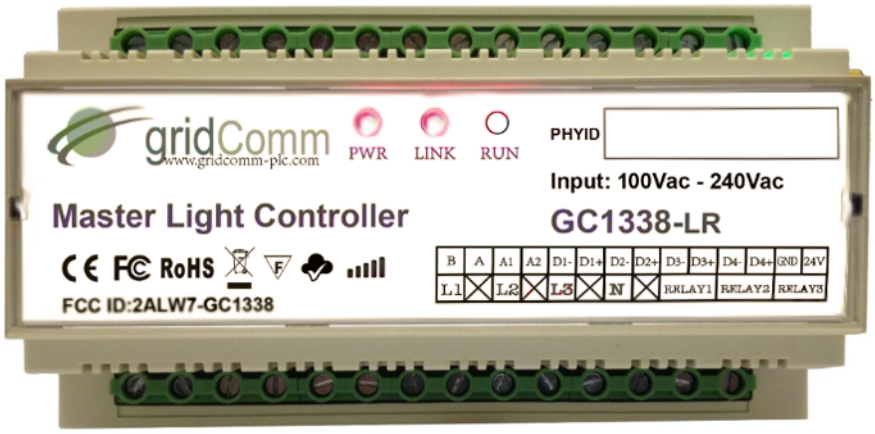

Figure 1- GC1338 3-phase DIN Rail Master Light Controller

Overview

The gridComm GC1338 is a 3-Phase DIN Rail Hybrid Power Line Communication (PLC)- Radio Frequency (RF) Master Light Controller designed for Street Light Control operations. The gridComm Master Light Controller (MLC) serves as a powerful concentrator and gateway connecting a network of streetlights to the cloud-based Street Light Management Software, controlling and monitoring the operations of turning on/off, dimming, scheduling, alarm events and data-logging functions of an individual light or a group of street lights.

The 3-phase DIN Rail Master Light Controller utilizes the industry-leading gridComm GC2200 IC chip, an 18-channel OFDMA (Orthogonal Frequency Division Multiple Access) Power Line Communication Transceiver. The 18 PLC channels are capable of operating over a wide frequency range from 5KHz to 500KHz on the power lines whilst the 19th RF channel operates on industrial-strength ISM frequency bands.

By taking advantage of its inherent 18 independent PLC channels and the additional 19th RF channel, the GC1338 can communicate over PLC and RF concurrently. This brings upon the benefits of operating in a single unified communication network using common communication protocol, command sets and ID addressing scheme.

With its sub-GHz RF option capability, the MLC can communicate with plug-and-play RF battery-operated IoT sensor nodes, such as environmental, light, pollution, flood and proximity sensors, or any hybrid nodes which leverage on GC-Net networking firmware using power line network as the backbone network infrastructure. The MLC also integrates Digital I/Os that could be connected to an external anti-tamper or overload sensor for fail-safe measures and motion sensors or other sensors based on trigger events such as movements, light or sound. The MLC is also equipped with Analog I/Os for analog signal acquisitions from sensors such as temperature sensors, humidity sensors, etc for further processing. In addition, there is an on-board 4GB internal memory for storage of historical data. The connectivity TCP link with the backend Street Light Management Software (SLMS) is enabled via the built-in 3G modem. The GC1338 can automatically perform node discovery and establish suitable repeaters to set up a robust routing network based on a set of complex algorithms.

Figure 2 illustrates the implementation of a Smart Street Lighting Sensor Network System using the GC1338 in conjunction with gridComm's Digital Power Supply (DPS) and Street Lights Management Software.

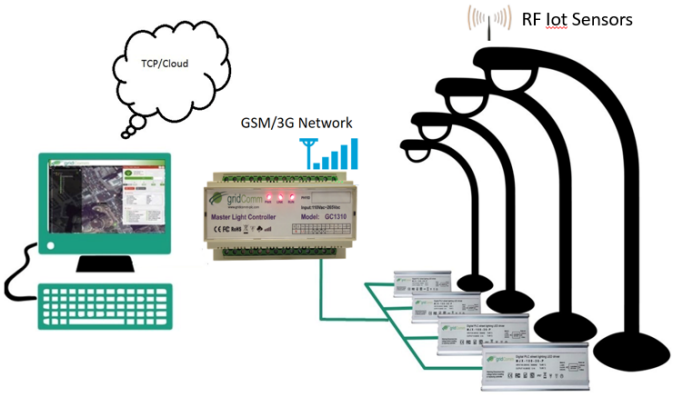

Figure 2- Smart Street Light Sensor Network System

Auto Network Applications

The GC1338/1338 is optimized for network topologies such as star or tree configurations. Figure 3 shows a simple hybrid PLC-RF network system implemented with GC1338 connected with four modems installed in a "Star" configuration. Figure 4 shows a hybrid "Tree" network (PLC/ wireless modes) with GC1338.

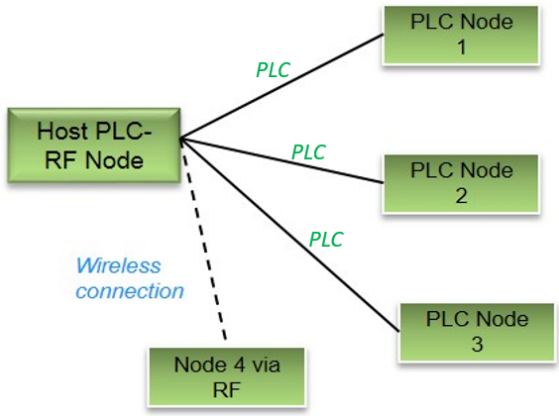

Figure 3- "Star"-Shaped Network

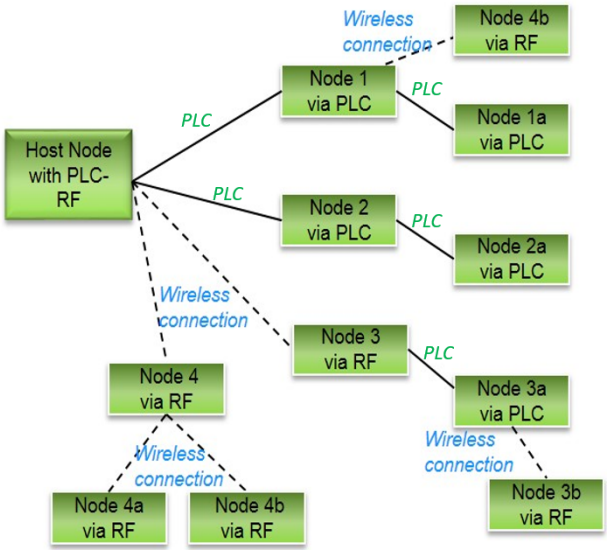

Figure 4 - Hybrid "Tree" Structure

Features

Besides being a 3-Phase PLC concentrator, the GC1338 also provides RS485 connections and a set of Digital Inputs and Digital Outputs.

- **RS485**

The RS485 connection provides an easy way to interface the Master Light Controller with a laptop or PC for configurations or debugging. The RS485 can also be extended to connect with any RS485 device (eg. RS485-Ethernet or RS485 sensors) to enable a feature or function.

Figure 5- RS485

- **Digital Inputs**

The GC1338 provides four groups of Digital Inputs, D1+ and D1-, D2+ and D2-, D3+ and D3-, D4+ and D4- as in Figure 6. These are a pair of optically isolated, polarity-sensitive digital inputs that you can use to monitor switch and sensor devices. D+, D- and a 24VDC Out can be used in conjunction with a sensor with FET or BIPOLAR output for active devices. The 24VDC Out supplies a DC 24V@350mA for the sensor while D+ and D- are connected to the sensor output of the FET or BIPOLAR transistors. These Digital Inputs can be configured to enable an event to be triggered based on the conditions set. *(Please contact gridComm, for future use only)*

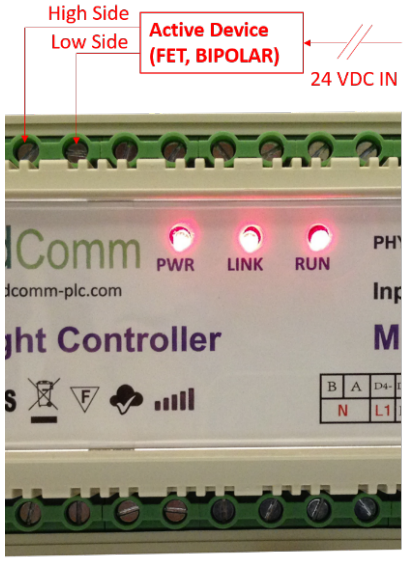

Figure 6- Digital Inputs of GC1338

- **Analog Inputs**

A1 and A2 are terminals for analog signals input. These terminals can be used for analog signals acquired from sensors such as temperature sensors, humidity sensors, etc for further processing. The reference for A1 and A2 is GND. Figure 7 shows an Analog input implementation.

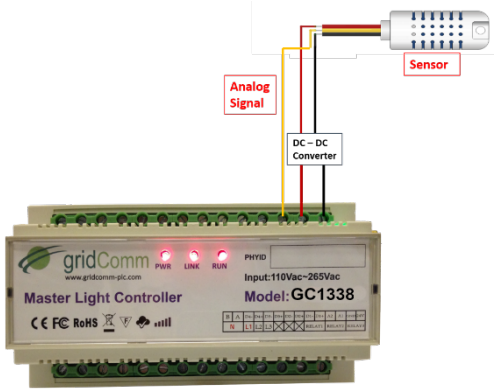

Figure 7- Analog Inputs of GC1338

- **Relays**

RELAY 1, RELAY 2 and RELAY 3 are three pairs of high-voltage, high-current, single pole single throw (SPST) relay outputs rated at 240VAC@10A or 24V DC@10A. The SPST relay contacts are polarity-insensitive, and they can be used to switch both AC and DC loads. It can be used to perform on/off controls on loads such as motors and lamps etc. as in Figure 8. It can be configured to open the dry contacts based on a schedule and/or when a combination of input conditions occur, thus cutting off the power supply to the load.. *(Please contact gridComm, for future use only).*

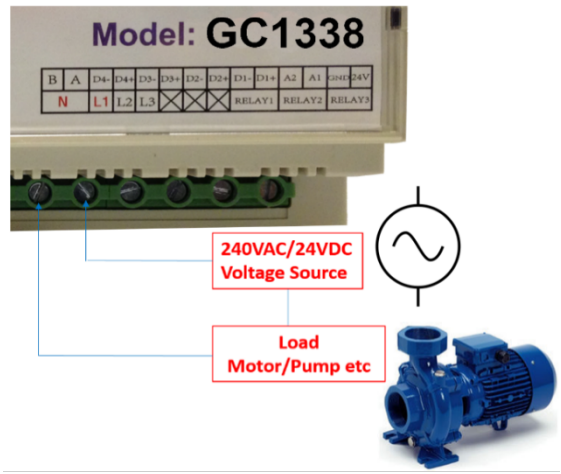

Figure 8- Dry Contact Relay Control

- **4GB On-Board Extended Flash Memory**

The 4GB on-board extended flash memory (optional) is important for storage of historical data such as power consumption, device life time, alerts and alarms. This historical data parameters can then be easily retrieved by the system should there be a failure with the TCP link or the server.

- **GSM/3G TCP Link**

The device is built in with a GSM/GPRS module to enable the TCP link connectivity with the server operating the Street Light Management Software.

Specifications

- Connects directly to 3-Phase Low-Voltage AC power line with L1 (Phase A), L2 (Phase B) and L3 (Phase C)
- Input power supply: L1, Neutral 100 ~ 240VAC @100mA max, 50/60Hz.
- Surge protection: 3750V
- Maximum Power Consumption: < 8 Watts
- CPU: Cortex M3, 120 MHz
- Memory: 64MB flash memory; 64MB RAM
- Extended Flash Memory Support: up to 4GB
- Supports RS485 via a transparent protocol
- Pre-set Serial COM Port settings: 115200 Baud rate, No Parity Bit, 8 Data Bit and 1 Stop Bit
- Supports MODBUS protocol when working in conjunction with gridComm Street Light Management Software
- Supports 3 sets of relays rated at 240VAC@10A or 24V DC@10A
- Supports 4 sets of Digital Inputs. Sensors to the digital inputs can be powered by the 24VDC with appropriate DC-DC circuitry.
- Supports 2 sets of Analog Inputs. Sensors to the Analog inputs can be powered by the 24VDC with appropriate DC-DC circuitry.
- Built-In GSM/3G Modem Quad-Band 850/ 900/ 1800/ 1900 MHz:

- GPRS multi-slot class 12

Output power

  - UMTS 850/1900: 0.25W
  - UMTS 900/2100: 0.25W
  - GSM850/GSM900: 2W
  - DCS1800/PCS1900: 1W

- HSPA+ Max. 14Mbps(DL), Max. 5.76Mbps(UL)
- WCDMA Max. 384Kbps(DL), Max. 384Kbps(UL)
- EDGE Class Max. 236.8Kbps(DL), Max. 118Kbps(UL)
- GPRS Max. 85.6Kbps(DL), Max. 42.8Kbps(UL)
- CSD GSM data rate 14.4Kbps, WCDMA data rate 57.6Kbps

- Operating Temperature: -40 to 60℃
- Storage Temperature: -40 to 85℃
- Operating Humidity: 10 to 90% RH @ 60℃
- Storage Humidity: 5 to 90% RH @ 60℃
- Confirmed to comply with requirements set out in The European Council Directive on Approximation of the Laws of the Member States Relating to RED (2014/53/EU) and RoHS (2011/65/EU). This device passed the test which was performed according to the following European standards:
  - ETSI EN 300 220-1 V3.1.1
  - ETSI EN 300 220-2 V3.1.1
  - ETSI EN 301 489-1 V2.1.1
  - ETSI EN 301 489-3 V2.1.1
  - Manufacturer:
  - Shenzhen Ju Yang Electronics Technology Co. Ltd.
  - Room 384, FuYong Information Building, BaoAn District, ShenZhen City
- Size in mm: 155 L x 110 W x 60 H Weight: 1000 g
- Flame Retardant ABS casing with DIN Rail mounting
- **PLC Specifications:**
  - 18 independent PLC channels operating with up to 54 out of 100 pre-installed carrier frequencies between 5 kHz to 500 kHz.
  - 3QPSK, 3BPSK, or 1BPSK PLC modulation schemes with up to 18 levels of redundancy
  - PLC Raw data rates between 1.22 Kbps to 7.32 Kbps depending on power line conditions
  - 32-bit PLC addressing scheme
  - One PLC master node supports up to 240 PLC slave nodes (recommended to keep it about 100 nodes)
  - Options for PLC operation on CENELEC A, CENELEC B, CENELEC C, CENELEC D, FCC or ARIB frequency bands.
  - Support user packet size of up to maximum of 512 bytes on PLC (user packets > 42 bytes will be segmented into multiple standard data packets automatically)
  - PLC Distance: Up to 2km- the actual distance depends on power line conditions such as noise, attenuation and load impedance
  - PLC Rx Sensitivity: -75 dBm
- **LoRa Radio Frequency Module Specifications:**
  - LoRa$_{TM}$ Modem
  - 168 dB maximum link budget
  - +18 dBm - 60 mW constant RF output vs. V supply
  - +14 dBm high efficiency PA
  - Data rate up to 2.4 kbps
  - High sensitivity: down to -148 dBm
  - Bullet-proof front end: IIP3 = -12.5 dBm
  - Excellent blocking immunity
  - Low RX current of 10.3 mA, 200 nA register retention
  - Fully integrated synthesizer with a resolution of 61 Hz
  - FSK, GFSK, MSK, GMSK, LoRa$_{TM}$ and OOK modulation
  - Operating communication frequency available in 433MHz or 868MHz or 915/923MHz
  - Preamble detection
  - 127 dB Dynamic Range RSSI
  - Automatic RF Sense and CAD with ultra-fast AFC.
  - Packet engine up to 256 bytes with CRC.

Contact Information

For more information regarding the *GC1338 3-phase DIN Rail Master Light Controller* including pricing and ordering, please contact: gridComm Pte Ltd

www.gridComm-plc.com

sales@gridCommplc.com

Dimensions

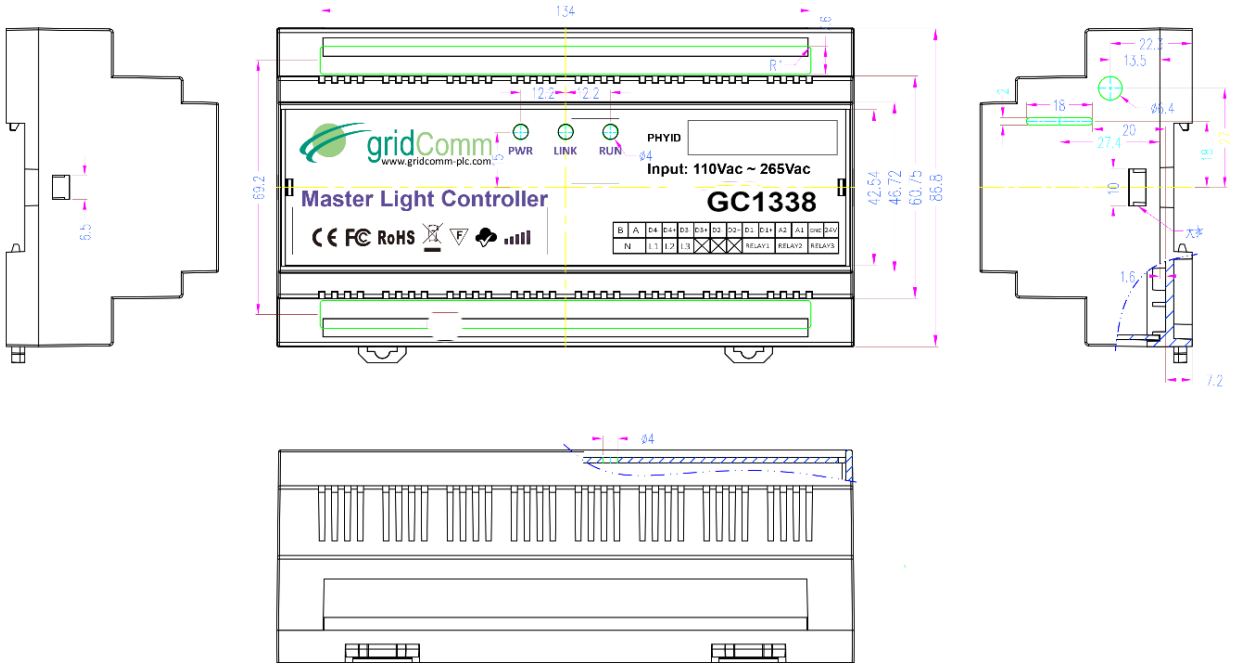

Figure 9- Dimensions of GC1338

FCC Compliance Statement

This device complies with part 15 of the FCC Rules. Operation is subject to the following two conditions: (1) this device may not cause harmful interference, and (2) this device must accept any interference received, including interference that may cause undesired operation.

The manufacturer is not responsible for ANY interference, for example RADIO or TV interference, caused by unauthorized modifications to this equipment. Such modifications could void the user's authority to operate the equipment.

The antenna(s) used for this transmitter must not be co - located or operating in conjunction with any other antenna or transmitter.
This equipment has been tested and found to comply with the limits for a Class B digital device, pursuant to Part 15 of the FCC Rules. These limits are designed to provide reasonable protection against harmful interference in a residential installation.

This equipment generates, uses and can radiate radio frequency energy and, if not installed and used in accordance with the instructions, may cause harmful interference to radio communications.
However, there is no guarantee that interference will not occur in a particular installation. If this equipment does cause harmful interference to radio or television reception, which can be determined by turning the equipment off and on, the user is encouraged to try to correct the interference by one or more of the following measures:

- Reorient or relocate the receiving antenna.
- Increase the separation between the equipment and receiver.
- Connect the equipment into an outlet on a circuit different from that to which the receiver is connected.
- Consult the dealer or an experienced radio/TV technician for help.