Module W708
Product Specification

Version	Issue date	Changes	Remark
0.1	2015/9/04	Initial Version	
0.2	2015/10/22	Update GPIO sharing scheme	
0.3	2015/11/30	Update package information. Correct PERST_N	
0.4	2015/12/1	Update industrial and commercial grade information	
0.5	2016/10/15	GPIO : Link2 change to UART_TXD2	
0.6	2017/5/18	Update FCC approval information, Correct GPIO 27, 28, 29	

IMPORTANT

This document contains important Information and therefore
should not be disclosed to third parties without prior written consent of amazipoint technology Ltd.

Address：2F, No. 113, Zhongyang Rd., Xindian Dist., New Taipei City, Taiwan(R.O.C)
www.amazipoint.com

Signature:

Author:	Reviewed by:	Approved by:	Remarks:
Martin Ho			

Copyright © amazipoint technology Ltd. All rights are reserved.

1. Introduction

W708 module is designed for easy-design-in low cost Wifi application。It has WAN, LAN, UART, I2C, SPI, I2S, SDXC and GPIO interfaces. Support 1T1R 150N operation. 3.3V single power supply.

There are industrial grade and commercial grade two different configuration. For industrial grade, we use industrial grade DDR2 memory. component. For commercial grade, we use commercial grade DDR2 memory. component.

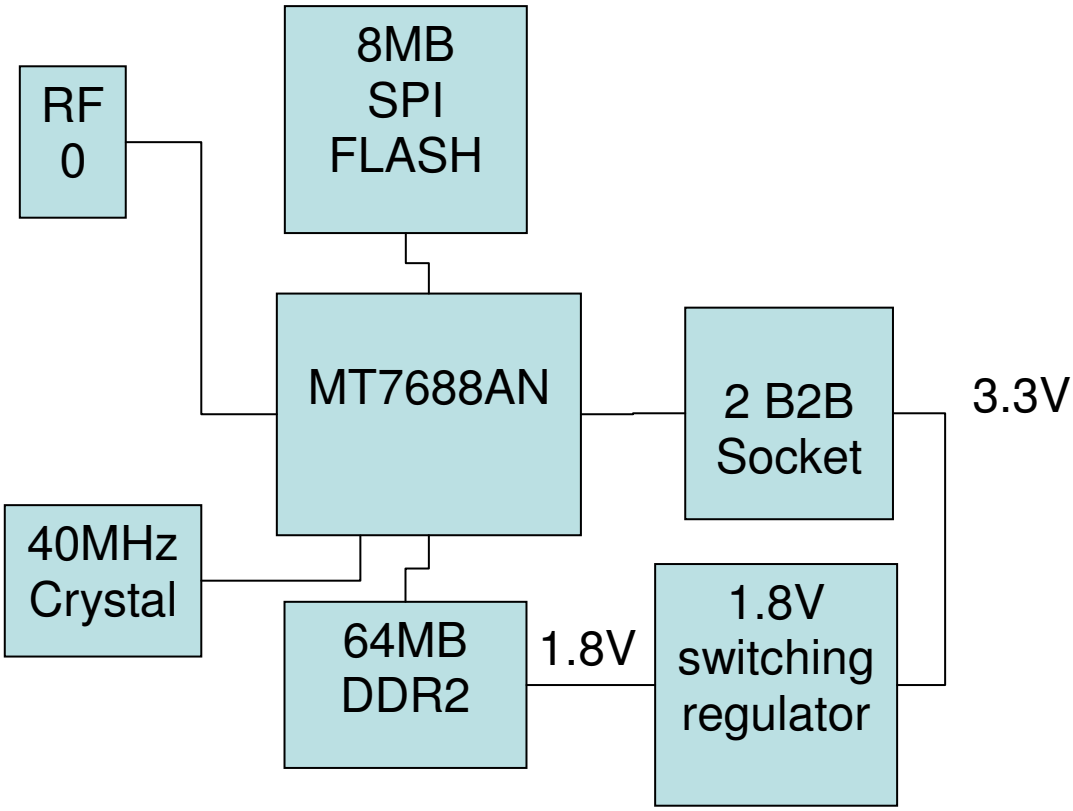

2. Technical specification

a. Channel Plan

country code	region	channel
0	North America	CH1 ~ 11
1	Others	CH1 ~ 13
5	Japan	CH1 ~ 14
6		CH3 ~ 9
7		CH5 ~ 13

Copyright © amazipoint technology Ltd. All rights are reserved.

Note : The country code is configured before shipping and can not be changed by user.

b. Specification Table

<table>
<tr><th colspan="2">Items</th><th>Specification</th></tr>
<tr><td colspan="2">Supported Standard and Protocol</td><td>IEEE 802.11n, IEEE 802.11g, IEEE 802.11b, IEEE 802.3, IEEE 802.3u, CSMA/CA, CSMA/CD,TCP/IP,DHCP, ICMP, NAT, PPPoE</td></tr>
<tr><td colspan="2">Dimension</td><td>35*25 mm</td></tr>
<tr><td colspan="2">Power consumption</td><td>< 250mA, 180mA typical</td></tr>
<tr><td colspan="2">Operating Temperature Range</td><td>-30 ~ 80 deg. C (for commercial grade)
-40 ~ +85 deg. C (for industrial grade)</td></tr>
<tr><td colspan="2">Storage Temperature Range</td><td>-40 ~ 90 deg. C</td></tr>
<tr><td colspan="2">Humidity</td><td>< 90%</td></tr>
<tr><td></td><td>WAN Port</td><td>one 10/100M adaptive RJ45 port</td></tr>
<tr><td></td><td>LAN Port</td><td>one 10/100M adaptive RJ45 port</td></tr>
<tr><td>RF Parameters</td><td>Frequency Range</td><td>2.412~2.4835GHz, depends on country code, maybe 2.412~2.462 or 2.412~2.472GHz</td></tr>
<tr><td></td><td>Baud Rate</td><td>1T1R :
<table>
<tr><th rowspan="3">MCS index</th><th colspan="4">Data rate (Mbit/s)</th></tr>
<tr><th colspan="2">20 MHz channel</th><th colspan="2">40 MHz channel</th></tr>
<tr><th>800ns</th><th>400ns</th><th>800ns</th><th>400ns</th></tr>
<tr><td>0</td><td>6.5</td><td>7.2</td><td>13.5</td><td>15</td></tr>
<tr><td>1</td><td>13</td><td>14.4</td><td>27</td><td>30</td></tr>
<tr><td>2</td><td>19.5</td><td>21.7</td><td>40.5</td><td>45</td></tr>
<tr><td>3</td><td>26</td><td>28.9</td><td>54</td><td>60</td></tr>
<tr><td>4</td><td>39</td><td>43.3</td><td>81</td><td>90</td></tr>
<tr><td>5</td><td>52</td><td>57.8</td><td>108</td><td>120</td></tr>
<tr><td>6</td><td>58.5</td><td>65</td><td>121.5</td><td>135</td></tr>
<tr><td>7</td><td>65</td><td>72.2</td><td>135</td><td>150</td></tr>
</table></td></tr>
<tr><td></td><td></td><td>IEEE 802.11g：54/48/36/24/18/12/9/6(adaptive)</td></tr>
<tr><td></td><td></td><td>IEEE 802.11b：11/5.5/2/1M(adaptive)</td></tr>
</table>

Copyright © amazipoint technology Ltd. All rights are reserved.

	Number of Channel	Support channel 1 ~14, actual channel numbers depends on setting of country code
	Modulation Scheme	DBPSK、DQPSK、CCK and OFDM(BPSK/QPSK/16-QAM/64-QAM)
	Sensitivity @ PER	150M：-68dBm@10% PER；130M：-68dBm@10% PER； 108M： -68dBm@10% PER；54M：-72dBm@10% PER 11M：-85dBm@8% PER；6M：-88dBm@10% PER 1M：-90dBm@8% PER；
	Output Power	802.11b: 16 dBm ± 1.5dBm@11Mbps (1T1R total power) 802.11g: 14.5 dBm ± 1.5dBm@54Mbps 802.11n HT20: 14.5 dBm ± 1.5dBm @MCS7 802.11n HT40: 14.5 dBm ± 1.5dBm @MCS7
	Antenna	One IPEX I connectors for one external antenna(1T1R)
WIFI Operation Mode		Client/AP
System Service		Virtual Server：Internal web server for browser to access
Device Management		Area setting Restore to default factory setting Software upgrade Reboot Change password
WLAN Security Mode		OPENWEP SHAREDWEP WEPAUTO WPA WPA-PSK WPA2 WPA2-PSK WPAPSKWPA2PSK WPA1WPA2(WPA and WPA2 hybrid mode)

Copyright © amazipoint technology Ltd. All rights are reserved.

	802.1x

3. Software features

- Support WPS
- Support AP（Access point）、Client（Wifi Station) mode
- **AP mode**
  - Default operation mode. In this mode, the module work as an Access Point, don't need any configuration.
  - User can use PC via RJ45 or smart phone via Wifi to login AP mode and change the default configuration (through browser).
- **Client mode**
  - In this mode, module is a Wifi station.

4. Development tool :

We provide development tool for easy connection of power, RS-232, LAN, WAN, and USB port.

5. Module Dimension : 35*25 mm

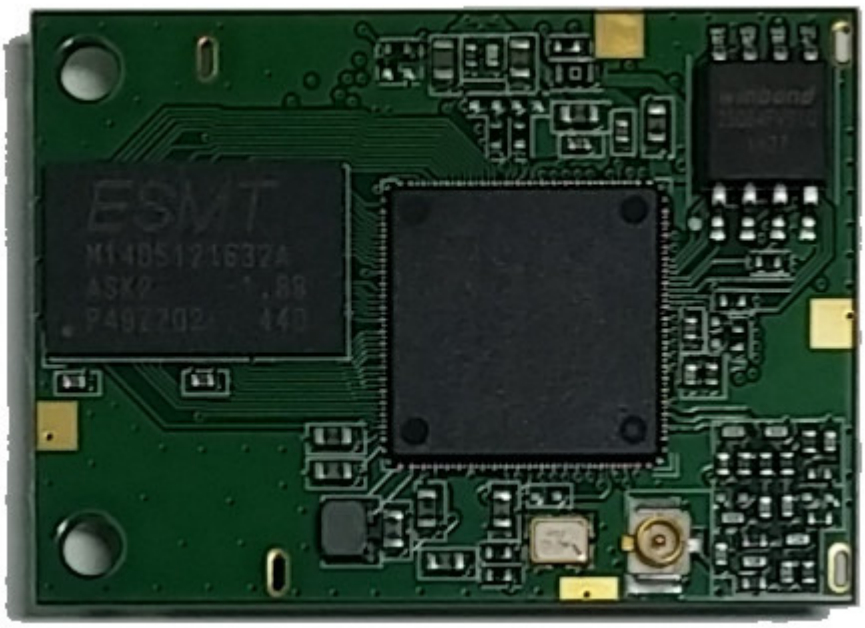

Copyright © amazipoint technology Ltd. All rights are reserved.

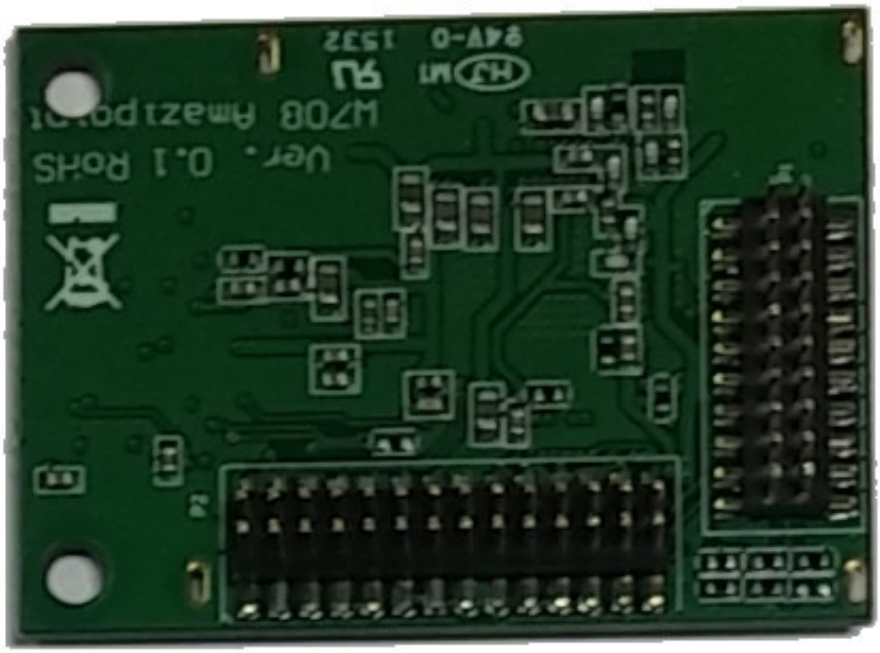

There are two 1.27mm pitch header on the bottom side of module P1 and P2.

6. Pin Assignment

Bottom view for showing P1, P2 and pin 1/pin 2 position on bottom side of W708 module :

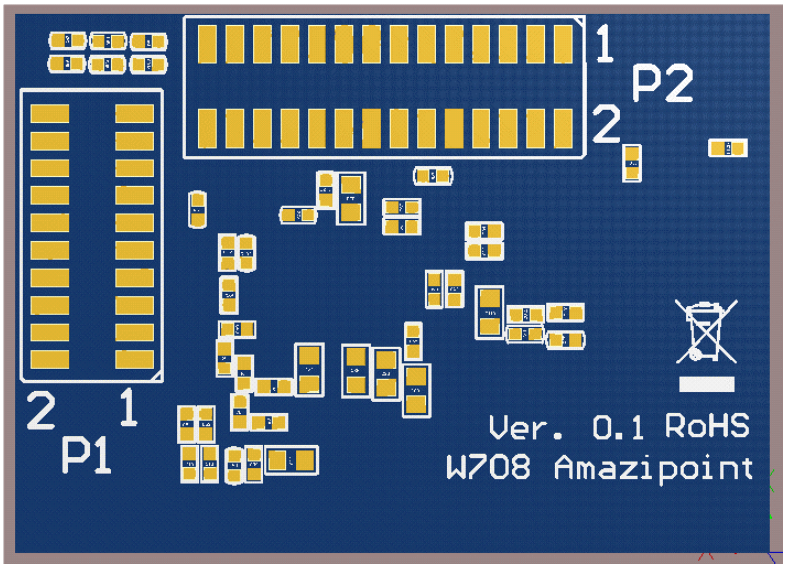

P1 :

Copyright © amazipoint technology Ltd. All rights are reserved.

Multi 1	Multi 2	GPIO	Main			Main	GPIO	Multi 2	Multi 1
		GPIO23	SD_CDT	1	2	SD_CMD	GPIO27		
		GPIO25	SD_D0	3	4	SD_D3	GPIO28		
		GPIO24	SD_D1	5	6	SD_D2	GPIO29		
		GPIO22	SD_WP	7	8	SD_CLK	GPIO26		
		GPIO37	REF_CLKO	9	10	POR			
		GPIO39	LINK4	11	12	GPIO0	GPIO11	REFCLK	
		GPIO40	LINK3	13	14	SPI_MISO	GPIO9		
		GPIO6	SPI_CS1	15	16	TXD0	GPIO12		
		GPIO7	SPI_CLK	17	18	RXD0	GPIO13		
		GPIO20	URAT_TXD2	19	20	SPI_MOSI	GPIO8		

P2 :

Multi 1	Multi 2	GPIO	Main			Main	GPIO	Multi 2	Multi 1
		GPIO4	I2C_SCLK	1	2	I2C_SD	GPIO5		
			TXO1_P	3	4	RXI0_P			
			TXO1_N	5	6	RXI0_N			
		GPIO2	I2S_WS	7	8	LINK0	GPIO43		
		GPIO36	PERST_N	9	10	GND			
	PWM_CH1	GPIO46	RXD1	11	12	USB_P			
		GPIO38	WDT_RST_N	13	14	USB_N			
			3.3VD	15	16	GND			
			3.3VD	17	18	TXO0_P			
		GPIO1	I2S_DO	19	20	TXO0_N			
	PWM_CH0	GPIO45	TXD1	21	22	RXI1_N			
		GPIO0	I2S_DI	23	24	RXI1_P			
		GPIO42	LINK1	25	26	I2S_CLK	GPIO3		
		GPO44	WLAN_LED	27	28	UART_RXD2	GPIO21		

P1 :

Pin #	Function	Direction	Description
1	SD_CDT	In	SDXC Card Detect
2	SD_CMD	Out	SDXC Command
3	SD_D0	In/Out	SDXC Data0
4	SD_D3	In/Out	SDXC Data3

Copyright © amazipoint technology Ltd. All rights are reserved.

5	SD_D1	In/Out	SDXC Data1
6	SD_D2	In/Out	SDXC Data2
7	SD_WP	In	SDXC Write Protect
8	SD_CLK	Out	SDXC Clock
9	REF_CLKO	Out	Reference clock output
10	POR	In	Power on reset input, low active
11	LINK4	Out	Link LED for port 4
12	GPIO0	Out	GPIO0 or WPS push button
13	LINK3	In/Out	Link LED for port 3
14	SPI_MISO	In	SPI MISO signal
15	SPI_CS1	Out	SPI chip select signal 1
16	TXD0	A	Console UART TXD signal
17	SPI_CLK	Out	SPI clock output
18	RXD0	A	Console UART RXD signal
19	LINK2	Out	Link LED for port 2
20	SPI_MOSI	Out	SPI MOSI signal

P2 :

Pin #	Function	Direction	Description
1	I2C_SCLK	In/Out	I2C Clock signal
2	I2C_SD	In/Out	I2C Data signal
3	TXO1_P	A	Tx positive for port 1
4	RXI0_P	A	Rx positive for port 0
5	TXO1_N	A	Tx negative for port 1
6	RXI0_N	A	Rx negative for port 0
7	I2S_WS		I2S word select
8	LINK0	Out	Link LED for port 0
9	PERST_N		PCIe device reset
10	GND		Power ground
11	RXD1		UART1 RXD signal
12	USB_P	In/Out	USB signal poistive
13	WDT_RST_N	Out	Watchdog reset
14	USB_N	In/Out	USB signal negative
15	3.3VD	Power In	3.3V input
16	GND		Power ground

Copyright © amazipoint technology Ltd. All rights are reserved.

17	3.3VD	Power In	3.3V input
18	TXO0_P	A	Tx positive for port 0
19	I2S_DO	out	I2S data out
20	TXO0_N	A	Tx negative for port 0
21	TXD1	Out	UART1 TXD
22	RXI1_N	A	Rx negative for port 1
23	I2S_DI	In	I2S data in
24	RXI1_P	A	Rx positive for port 1
25	LINK1	Out	Link LED for port 1
26	I2S_CLK	out	I2S clock signal
27	WLAN_LED	Out	WLAN LED output, active low
28	UART_RXD2	In	UART2 RXD

7. Memory configuration

Depending on customer's request, the module can be shipped with following configuration :

Flash size : 2MB, 4MB, 8MB, 16MB, 32MB, 64MB
DDR2 size : 64MB, 128MB

8. Mechanical Application Notes

1. CON0 is IPEX1 connectors on top side
2. P1 is 2*10 pins 1.27mm male header on bottom side for signals
3. P2 is 2*14 pins 1.27mm male header on bottom side for signals
4. Footprint of P1, P2 is as following :

Copyright © amazipoint technology Ltd. All rights are reserved.

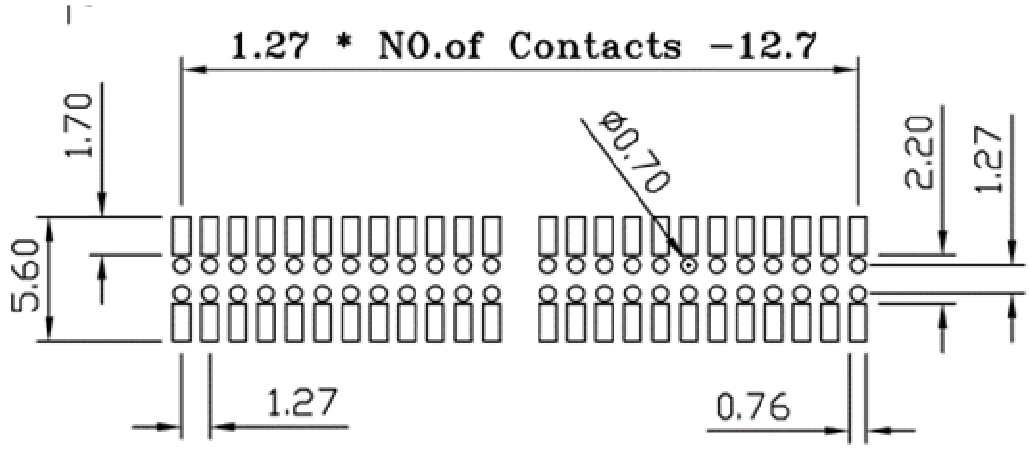

5. There are four slot holes used for installing metal shielding cover if needed
6. There are two diameter 2.1mm holes for screw fixing
7. The mechanical drawing in .dxf format is available under request.
8. Bottom view 2D drawing is as following :

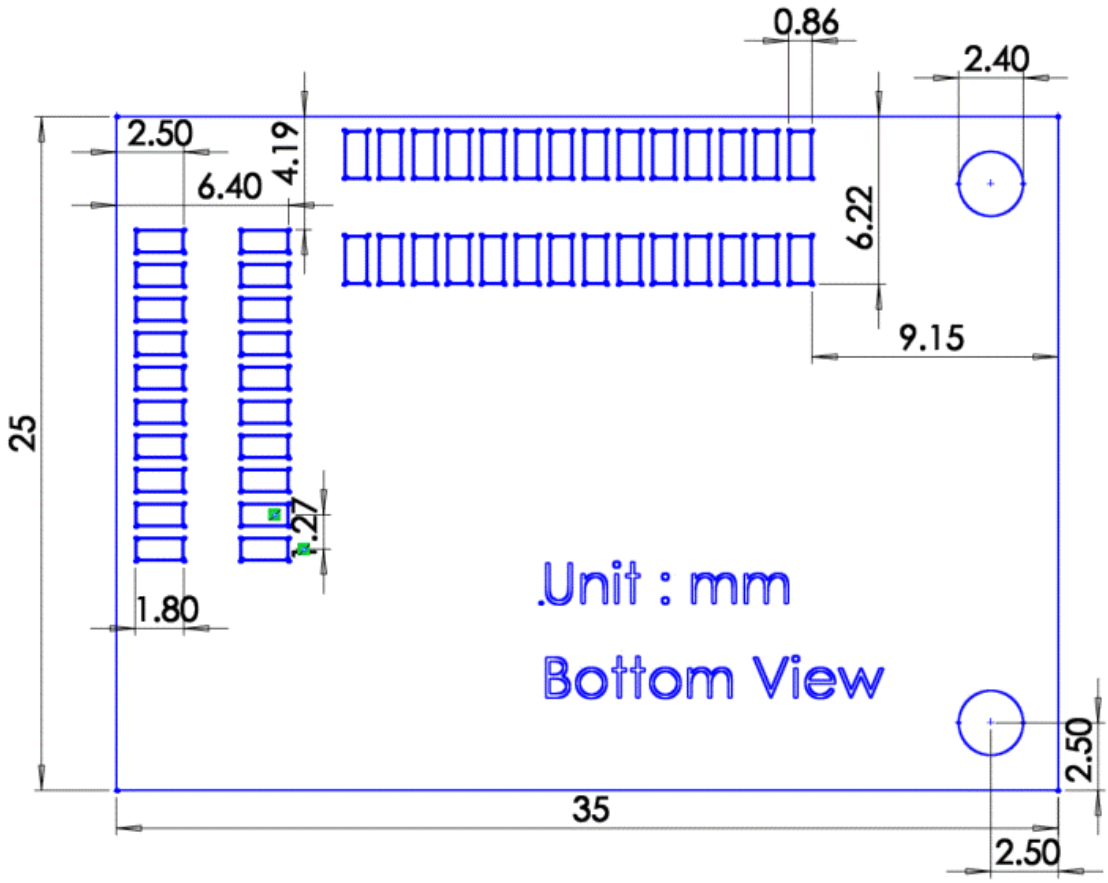

9. Shipping & package information

Copyright © amazipoint technology Ltd. All rights are reserved.

W708 is packaged with stacked PS tray :

- Tray size : for each element, the size is 45*35*12 mm, there are 8*8 elements for each tray. There are 25 trays in each carton. So, total 1600 pieces maximum for each carton.

- Carton size : 500 x 400 x 300 mm
- Carton Label (packing list) :

Amazipoint Tech. Ltd.

Packing List

DATE: 2015/11/30
Q.O. # SO-2015-11001

2F,No. 113, Zhongyang Rd., Xindian Dist.,
New Taipei City, Taiwan(R.O.C)
Phone: +886-2-82191011
Fax: +886-2-82191011

Customer
XXXXXXXXXXXXXX
YYYYYYY
ZZZZZ

PO # : xxxxxxxx

REQUISITIONER	SHIP VIA	F.O.B.	SHIPPING TERMS

ITEM #	DESCRIPTION	QTY	UNIT PRICE(USD)	TOTAL
W708-8-64	MT7688 module with 8MB flash, 64MB DDR2			

10. Ordering Information

The part number for placing order is W708-MM-NN-G.

- MM is bytes of SPI flash and NN is bytes for DDR2.
- G : C for commercial grade or I for industrial grade.
- For example with the standard memory configuration 8MB Flash, 64MB DDR2 and commercial grade, the part number is W708-8-64-I.

Copyright © amazipoint technology Ltd. All rights are reserved.

11. FCC Warning Statement

FEDERAL COMMUNICATIONS COMMISSION REGULATIONS

This equipment has been tested and found to comply with the limits for a Class B digital device, pursuant to Part 15 of the FCC Rules. These limits are designed to provide reasonable protection against harmful interference in a residential installation. This equipment generates, uses and can radiate radio frequency energy and, if not installed and used in accordance with the instructions, may cause harmful interference to radio communications. However, there is no guarantee that interference will not occur in a particular installation. If this equipment does cause harmful interference to radio or television reception, which can be determined by turning the equipment off and on, the user is encouraged to try to correct the interference by one or more of the following measures:
– Reorient or relocate the receiving antenna.
– Increase the separation between the equipment and receiver.
– Connect the equipment into an outlet on a circuit different from that to which the receiver is connected.
– Consult the dealer or an experienced radio/TV technician for help.

CAUTION:

Any changes or modifications not expressly approved by the party responsible for compliance could void the user's authority to operate the equipment.
This device complies with Part 15 of the FCC Rules. Operation is subject to the following two conditions:
(1) This device may not cause harmful interference and
(2) This device must accept any interference received, including interference that may cause undesired operation.

FCC RF Radiation Exposure Statement

This equipment complies with FCC/IC radiation exposure limits set forth for an uncontrolled environment. This equipment should be installed and operated with minimum distance 20 cm between the radiator & your body.

Important Note

In the event that these conditions can not be example certain laptop configurations or collocation with another transmitter, then the FCC authorization is no longer considered valid the FCC ID can not be used on the final product. In these circumstances, OEM integrator will be responsible for re-evaluating the end product (including the transmitter) and obtaining a separate FCC authorization.

End Product Labeling

This transmitter module is authorized only for use in device where antenna may be installed such that 2.5 cm may be maintained between antenna and users (for example access points, routers, wireless ADSL and similar equipment). The final end product must be labeled in a area with the following: “ Contains FCC ID: 2ALWN-W708”.

Manual Information for End Users

The end user must not have manual instructions to remove or install device. The user manual for end users must include the following information in a prominent

Copyright © amazipoint technology Ltd. All rights are reserved.

location:

“IMPORTANT NOTE: To comply with FCC RF exposure compliance requirements, the antenna used for this transmitter must be installed to provide a separation distance of at least 20 cm from all persons and must not be co-located operating in conjunction with any other antenna or transmitter.” as a result of e-mail transmission.”

Copyright © amazipoint technology Ltd. All rights are reserved.